AMF REECE®

Series 38S

Lockstitch Pocket Welting Machines

Illustrated Parts Manual

NO. 1

CONTENTS

MACHINE BODY and THREADING MECHANISM 1
UPPER SHAFT and NEEDLE BAR ROCKING MECHANISM 2
LOWER SHAFT & ROTARY HOOK MECHANISM 3
KNIFE MECHANISM 4
LUBRICATION 5
THREAD STAND 6
THREADING MECHANISM 7
BOBBIN THREAD MONITOR 8
PATCH GUIDE MECHANISM 9
TENSION RELEASE, LOCATING LIGHT PARTS 10
HINGE PARTS 11
FRAME & COVERS 12
TABLE TOP & ASSOCIATE PARTS 13
CENTER KNIFE & UPPER, LOWER THREAD TRIMMING PARTS 14
TAB KNIFE SUPPORT PARTS 15
TAB KNIFE DRIVE PARTS 16
CARRIAGE ASSEMBLY 17
CLAMPING & FOLDING PARTS 18
CARRIAGE DRIVE COMPONENTS 19
FOOT TREADLE ASSOCIATE PARTS 20
CONTROL PANEL 21
MAIN POWER SUPPLY & DRIVE MOTOR 22
PNEUMATIC PARTS 23
TOOLS, SPARE PARTS 24
NEEDLE THREAD MONITOR(EXTRA PARTS) 25
TROUSER PANEL STACKER 26
WORK REMOVER 27
TROUSER AIR EJECTOR 28
LARGE BOBBIN ASSOCIATE PARTS(EXTRA PARTS) 29
LIST of MAIN SPARE PARTS 30

1

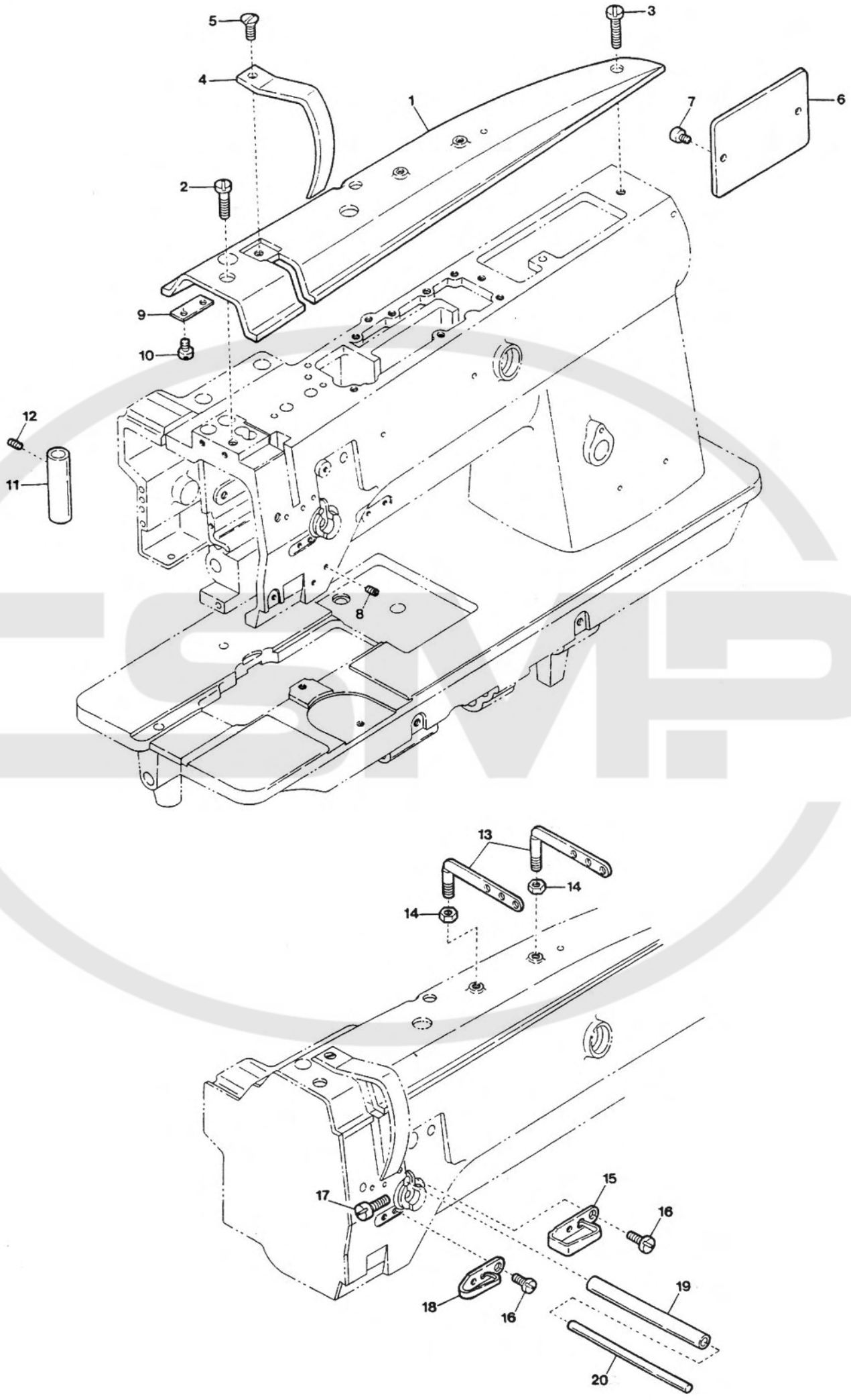

Det. No	Parts. No	Description
1	48-1900-0-030	Arm Top Cover
2	46-1000-8-200	Screw(4.37-40×16)
3	46-1000-8-201	Screw(4.37-40×16)
4	46-1001-5-000	Thread Take-up Cover
5	48-1092-0-000	Screw(4.76)
6	48-1900-0-032	Rear Cover
7	46-1000-8-202	Screw(3.57-40×6)
8	46-1000-8-245	Screw(4.37)
9	48-1900-0-033	Supplementary Arm Top Cover
10	48-1092-0-001	Screw(3.18-40×4)
11	46-1001-5-054	Presser Bar Bushing (Upper)
12	46-1000-8-289	Screw(5.95)
13	46-1001-5-003	Top Cover Thread Guide
14	46-1000-8-252	Nut(5.95)
15	46-1001-5-020	Arm Thread Guide (Upper)
16	46-1000-8-229	Screw(3.57)
17	46-1000-8-203	Screw(3.57)
18	46-1001-5-021	Arm Thread Guide (Center)
19	46-1001-5-022	Pipe
20	46-1001-5-023	Tension Release Bar

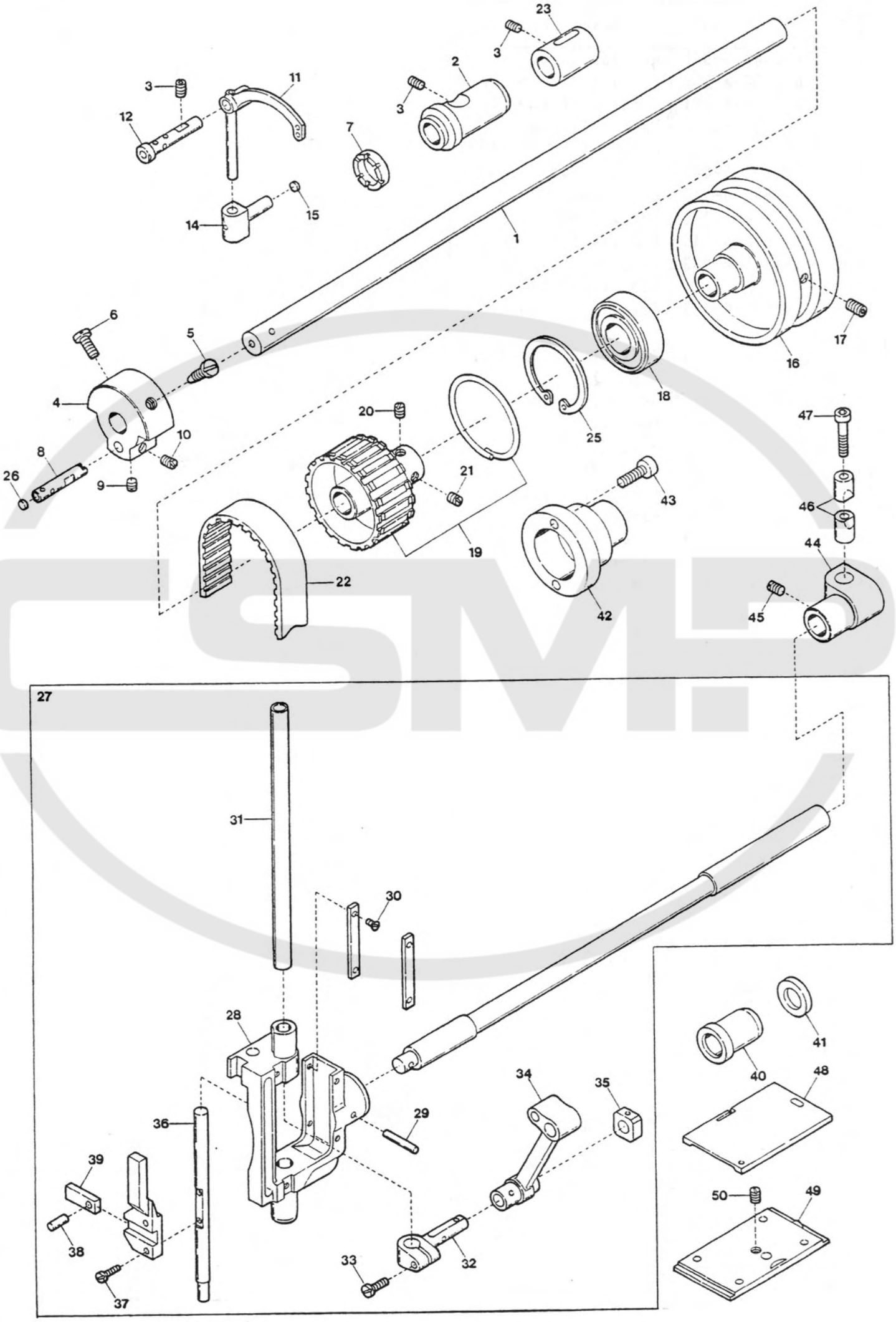
1
2
3
4
5
6
7
8
9
10
11
12
14
15
16
17
18
19
20
21
22
23
25
26
27
28
29
30
31
32
33
34
35
36
37
38
39
40
41
42
43
44
45
46
47
48
49
50

Det. No	Parts. No	Description
1	48-1900-0-034	Upper Shaft
2	48-1900-0-035	Upper Shaft Bushing (Left)
3	46-1000-8-233	Screw(5.95)
4	46-1001-5-033	Counter Weight
5	46-1000-8-205	Screw(7.14)
6	46-1000-8-206	Screw(7.14)
7	46-1001-5-034	Thrust Ring
8	48-1900-0-036	Needle Bar Crank
9	48-1092-0-002	Screw(6.35)
10	46-1000-8-235	Screw(6.35)
11	46-1001-5-028	Thread Take-up
12	46-1001-5-027	Stud
13	. . . . .	. . . . .
14	46-1001-5-029	Thread Take-up Lever Slide Block
15	46-1001-5-030	Pusher
16	48-1900-0-039	Pulley
17	48-1092-0-003	Screw(5.95-28×14)
18	46-1001-5-041	Bearing(6204 VV)
19	46-1001-5-039	Timing Belt Wheel (Upper) Assembly
20	46-1000-8-236	Screw(6.35×12)
21	46-1000-8-237	Screw(6.35×12)
22	46-1001-5-038	Timing Belt
23	46-1001-5-037	Upper Shaft Bushing (Center)
24	. . . . .	. . . . .
25	46-1001-5-040	Stop Ring(C)
26	48-1900-0-040	Pusher
27	48-1900-0-041	Needle Bar Crank Rod Assembly
28	48-1900-0-042	Needle Bar Support
29	46-1001-5-109	Taper Pin
30	46-1000-8-230	Screw(2.38)
31	48-1900-0-043	Needle Bar
32	48-1900-0-044	Needle Bar Clamp
33	48-1092-0-004	Screw(3.57)
34	46-1001-5-046	Needle Bar Crank Rod
35	46-1001-5-047	Needle Bar Guide Slide Block
36	48-1900-0-045	Center Knife Bar
37	46-1000-8-207	Screw(3.57-40×8)
38	48-1900-0-046	Block Shaft
39	48-1900-0-047	Center Knife Bar Block
40	48-1900-0-048	Needle Bar Rock Shaft Bushing(Left)

Det. No	Parts. No	Description
41	48-1900-0-051	Spacer
42	48-1900-0-052	Coupling Joint
43	48-1092-0-006	Screw(4.76-32×14)
44	48-1900-0-050	Needle Bar Rock Shaft Stop
45	48-1092-0-005	Screw(6.35)
46	46-1001-5-184	Pinch Sleeve
47	46-1000-9-753	Screw(M6×30)
48	46-1001-5-025	Slide Plate(Right)
49	48-1900-0-049	Slide Plate Front Assembly
50	46-1000-8-238	Screw(5.16)

3

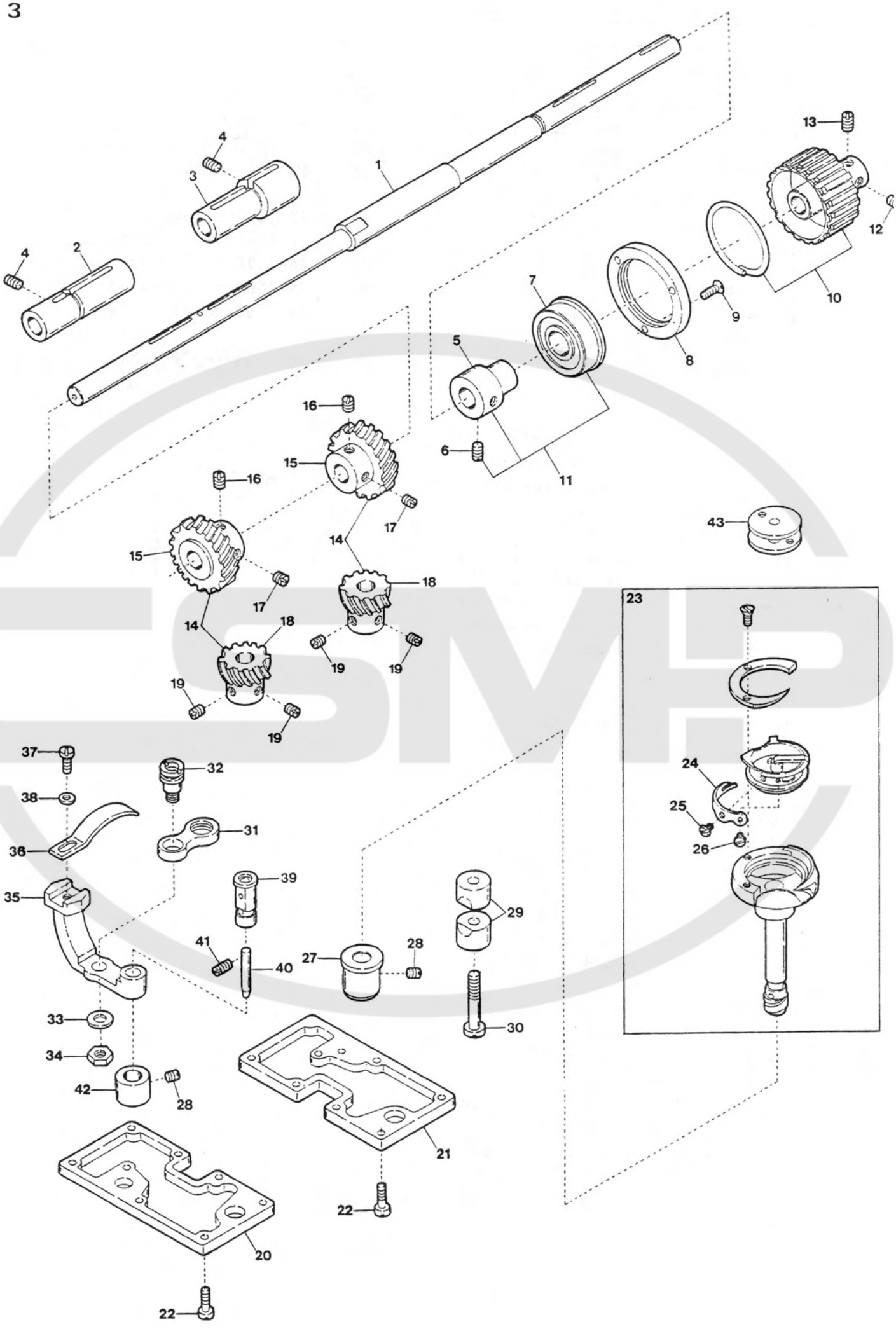
1
2
3
4
5
6
7
8
9
10
11
12
13
14
15
16
17
18
19
20
21
22
23
24
25
26
27
28
29
30
31
32
33
34
35
36
37
38
39
40
41
42
43

Det. No	Parts. No	Description
1	46-1001-5-059	Lower Shaft
2	46-1001-5-060	Rotary Hook Base Bushing(Left)
3	46-1001-5-061	Rotary Hook Base Bushing(Right)
4	46-1000-8-239	Screw(5.95)
5	46-1001-5-062	Bearing Holder
6	46-1000-8-242	Screw(6.35×7)
7	46-1001-5-063	Bushing
8	46-1001-5-065	Presser
9	48-1092-0-007	Screw(3.57×12)
10	46-1001-5-066	Timing Belt Wheel (Lower) Assembly
11	46-1001-5-064	Bearing Holder Assembly
12	46-1000-8-237	Screw(6.35×12)
13	46-1000-8-236	Screw(6.35×12)
14	48-1900-0-053	Spiral Gear Assembly
15	48-1900-0-054	Spiral Gear
16	46-1000-8-243	Screw(6.35)
17	46-1000-8-235	Screw(6.35)
18	48-1900-0-055	Pinion
19	46-1000-8-234	Screw(6.35)
20	46-1001-5-084	Oil Reservoir(Left)
21	46-1001-5-088	Oil Reservoir(Right)
22	46-1000-8-208	Screw(4.76)
23	48-1125-5-705	Outer Rotary Hook Assembly
24	46-1001-5-078	Tension Adjusting Spring
25	46-1000-8-209	Tension Adjusting Screw
26	46-1000-8-210	Screw
27	46-1001-5-075	Rotary Hook Shaft Bushing(Upper)
28	46-1000-8-240	Screw(4.76)
29	46-1001-5-076	Pinch Sleeve
30	48-1092-0-008	Screw(5.95)
31	46-1001-5-070	Opener Link
32	46-1001-5-071	Link Stud Opener
33	46-1000-8-257	Washer(4.76)
34	48-1093-0-000	Nut
35	46-1001-5-069	Opener Crank
36	46-1001-5-068	Bobbin Case Opener
37	46-1000-8-207	Screw(3.57-40×8)
38	48-1093-0-001	Washer
39	46-1001-5-072	Opener Crank Stud
40	46-1001-5-073	Pipe

Det. No	Parts. No	Description
41	46-1000-8-241	Screw(4.76)
42	46-1001-5-074	Rotary Hook Shaft Bushing(Lower)
43	46-1001-5-081	Bobbin

4

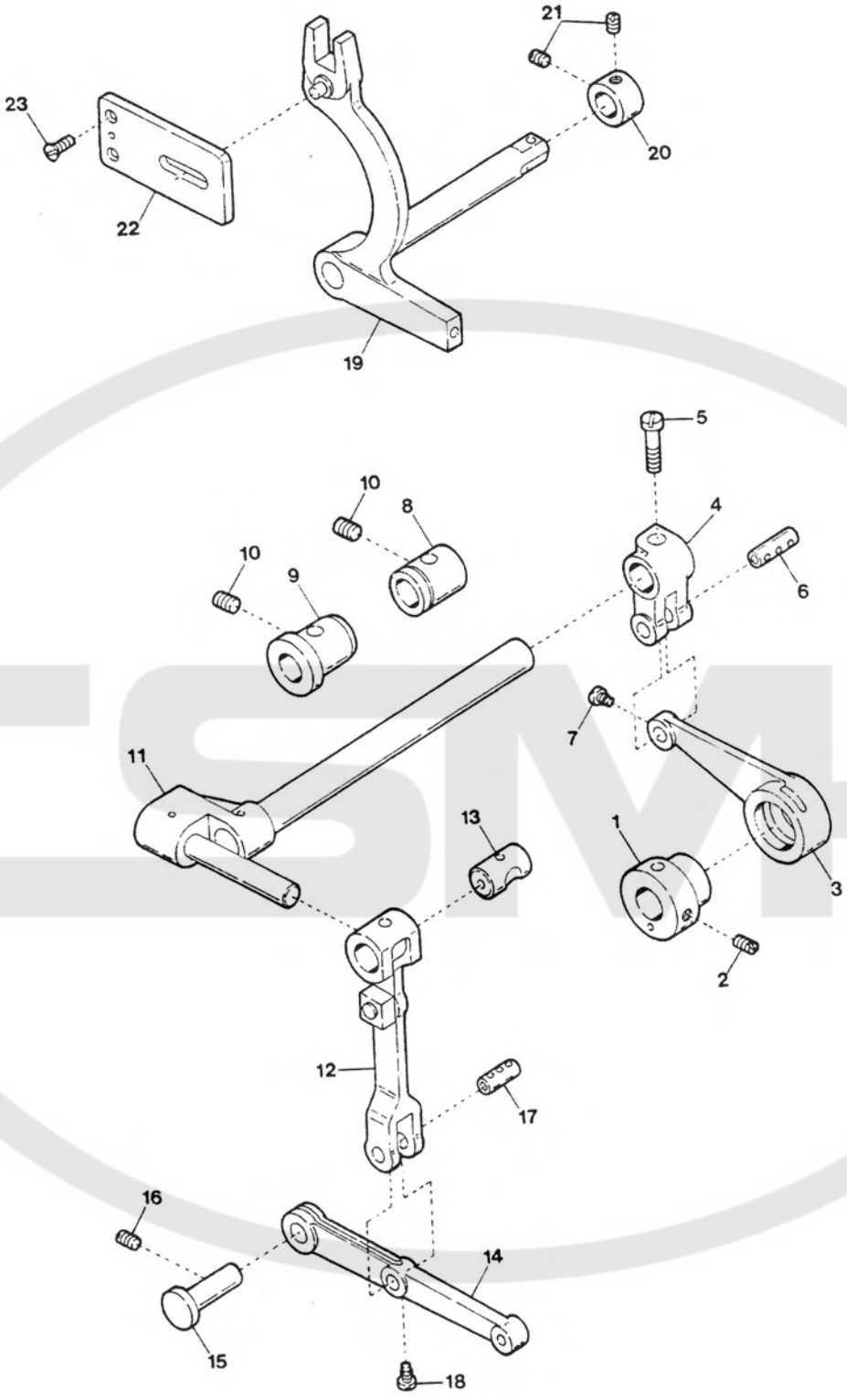

Det. No	Parts. No	Description
1	48-1900-0-067	Eccentric Wheel
2	48-1092-0-010	Screw(5.95)
3	48-1900-0-069	Center Knife Connecting Lever
4	48-1900-0-070	Center Knife Rock Arm
5	48-1092-0-011	Screw(5.56-32×16)
6	48-1900-0-071	Stud
7	48-1092-0-012	Screw(3.18)
8	48-1900-0-072	Rock Shaft Bushing (Right)
9	48-1900-0-073	Rock Shaft Bushing (Left)
10	48-1092-0-013	Screw(5.95)
11	48-1900-0-074	Center Knife Rock Shaft Assembly
12	48-1900-0-075	Connecting Rod Assembly
13	48-1900-0-076	Slide Block Driving Stud
14	48-1900-0-077	Center Knife Connecting Lever
15	48-1900-0-078	Connecting Lever Shaft
16	48-1092-0-015	Screw(5.95)
17	48-1900-0-079	Stud
18	48-1092-0-016	Screw(3.18)
19	48-1900-0-080	Change Lever Assembly
20	48-1900-0-081	Set Collar
21	48-1092-0-017	Screw(5.95)
22	48-1900-0-082	Change Lever Stop
23	48-1092-0-018	Screw(4.76)

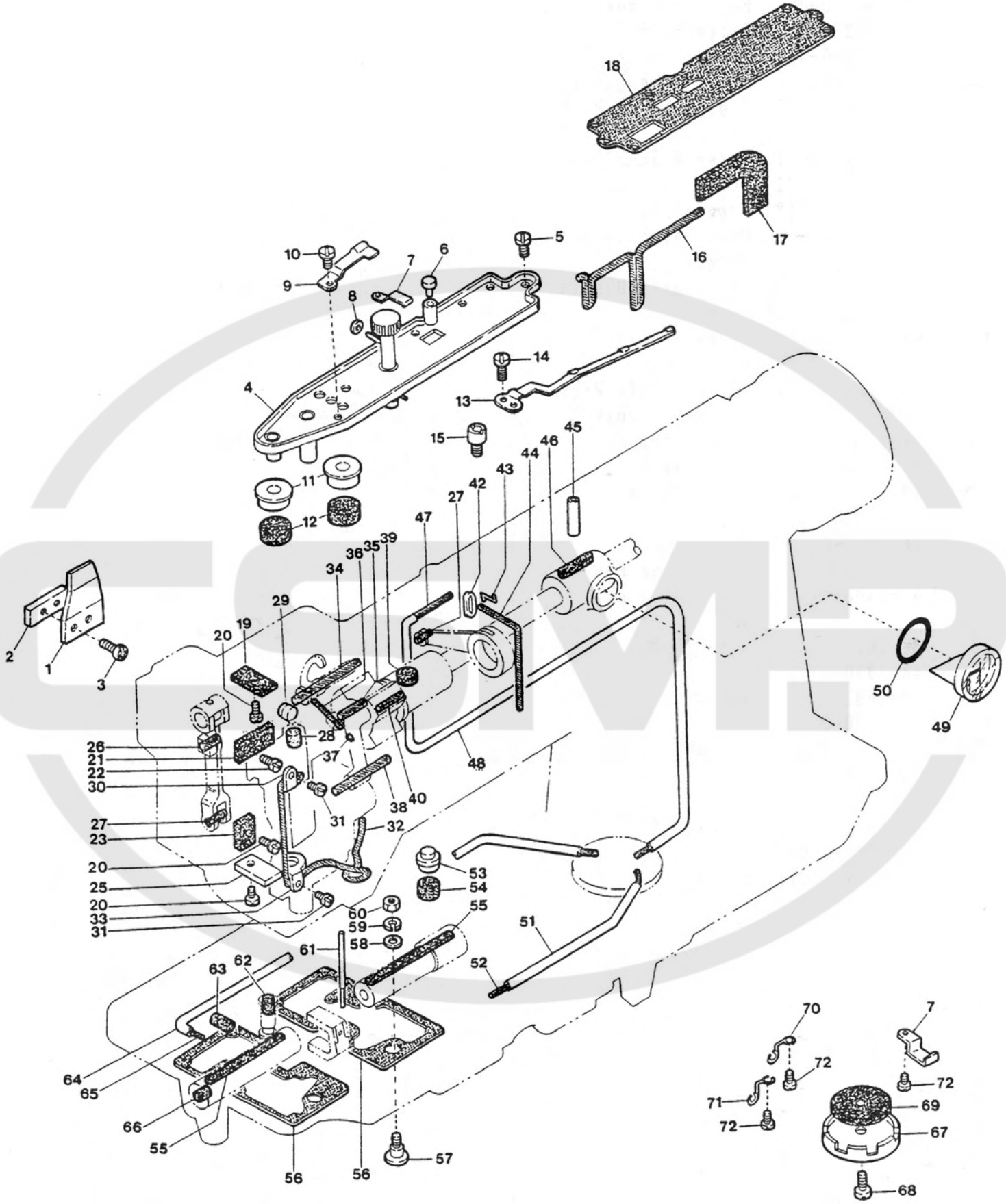
18
17
16
5
10
9
7
6
8
14
4
13
15
45
46
44
43
42
27
47
11
12
39
35
36
34
29
19
20
2
1
3
50
49
28
26
21
22
30
37
48
38
40
31
32
27
23
20
25
20
33
31
53
54
60
59
58
55
51
61
52
62
63
64
65
66
55
56
56
57
70
7
72
72
71
72
69
67
68

Det. No	Parts. No	Description
1	48-1900-0-086	Oil Stop Plate
2	46-1001-5-097	Oil Stop Plate Presser
3	46-1000-8-211	Screw(4.76-32×8)
4	46-1001-5-089	Oil Receiver Plate Assembly
5	46-1000-8-202	Screw(3.57-40×6)
6	46-1001-5-092	Cap for Oil Inlet
7	46-1001-5-091	Felt Presser
8	46-1000-8-261	Washer
9	46-1001-5-090	Spring Plate
10	46-1000-8-216	Screw(3.57-40×4)
11	48-1900-0-097	Oil Cup
12	48-1900-0-098	Felt
13	46-1001-5-094	Wick Holder
14	46-1000-8-212	Screw(3.18)
15	46-1000-8-248	Oil Guide Tube
16	46-1000-8-267	Wick
17	46-1000-8-273	Felt
18	46-1001-5-093	Packing
19	48-1900-0-095	Felt
20	48-1092-0-021	Screw(3.57)
21	46-1000-8-277	Felt
22	46-1000-8-215	Screw(3.57-40×6)
23	48-1900-0-096	Felt
24	・・・・・・・	・・・・・・・・・・・
25	48-1900-0-093	Oil Stop Plate
26	48-1093-0-003	Wick
27	48-1900-0-099	Felt
28	46-1001-5-043	Needle Bar Cap
29	48-1900-0-101	Cap
30	48-1900-0-089	Wick Support(Upper)
31	48-1092-0-020	Screw(3.18-40×4)
32	46-1000-8-266	Wick
33	48-1900-0-090	Wick Support(Lower)
34	46-1000-8-269	Wick
35	46-1000-8-272	Wick
36	48-1093-0-004	Wick
37	48-1900-0-102	Cap(Rubber)
38	46-1000-8-271	Wick
39	46-1000-8-274	Felt
40	46-1000-8-268	Wick

Det. No	Parts. No	Description
41	・・・・・・・	・・・・・・・・・・・
42	48-1900-0-092	Oil Shield
43	48-1900-0-091	Clip
44	48-1093-0-002	Wick
45	46-1001-5-073	Pipe
46	46-1000-8-279	Felt
47	46-1000-8-282	Wick
48	46-1001-5-099	Oil Tube
49	46-1001-5-108	Oil Gauge Window
50	46-1001-5-095	Packing(P16)
51	46-1001-5-101	Oil Tube
52	46-1000-8-284	Wick
53	46-1001-5-098	Oil Cap
54	46-1000-8-275	Felt
55	46-1000-8-278	Felt
56	48-1900-0-087	Packing
57	46-1000-8-226	Oil Adjusting Screw
58	46-1000-8-260	Washer
59	46-1000-8-264	Spring Washer
60	46-1000-8-255	Nut(4.37)
61	48-1900-0-088	Oil Gauge
62	46-1000-8-280	Felt
63	46-1000-8-276	Felt
64	46-1001-5-100	Oil Tube
65	46-1000-8-283	Wick
66	46-1000-8-281	Felt
67	46-1001-5-105	Oil Pipe Support
68	46-1000-8-213	Screw(4.76-32×10)
69	46-1000-8-287	Oil Felt
70	46-1001-5-107	Tube Holder
71	46-1001-5-106	Tube Holder
72	46-1000-8-214	Screw(3.57-40×5)

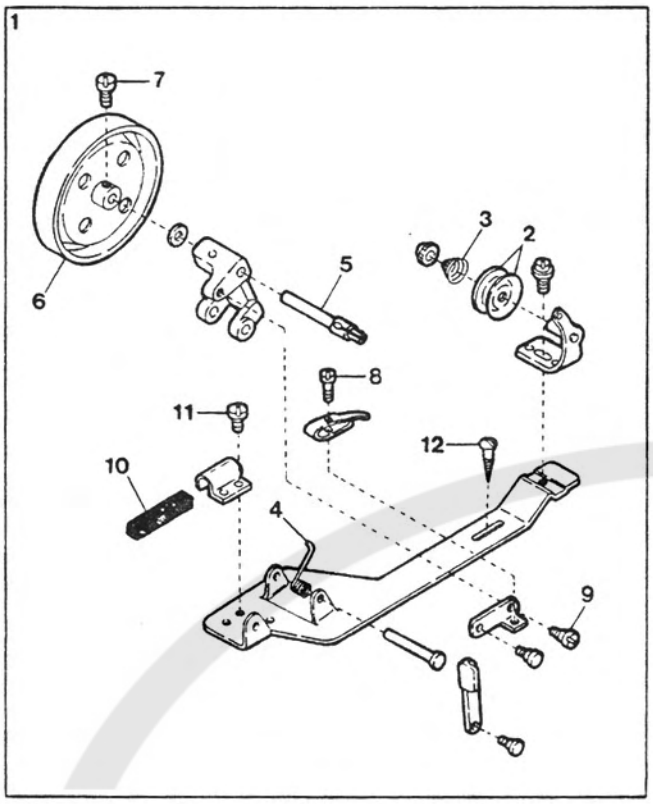
1
7
6
5
3
2
8
11
12
10
4
9

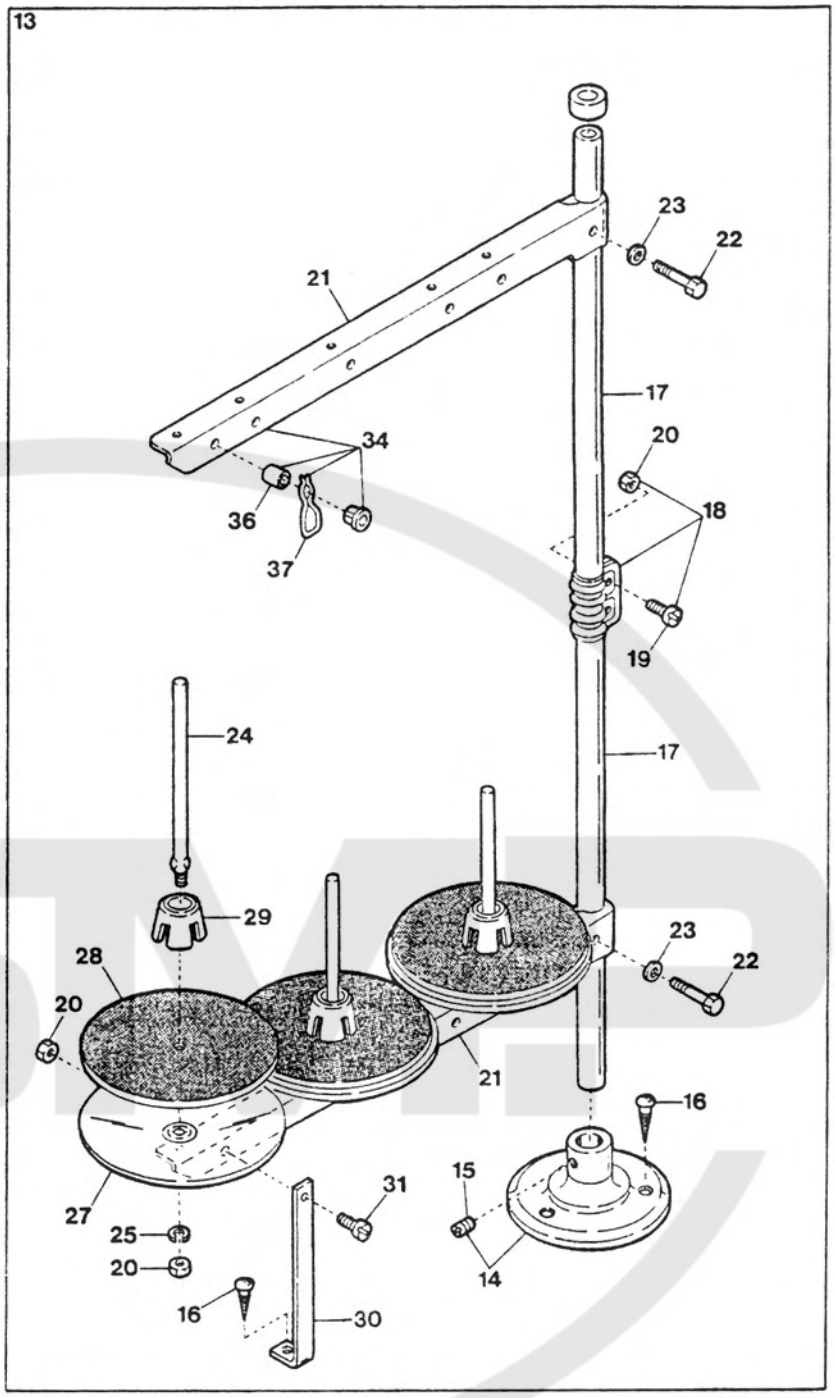
13
23
22
21
17
34
20
36
18
37
19
24
17
29
28
23
22
20
21
16
15
31
27
25
20
14
16
30

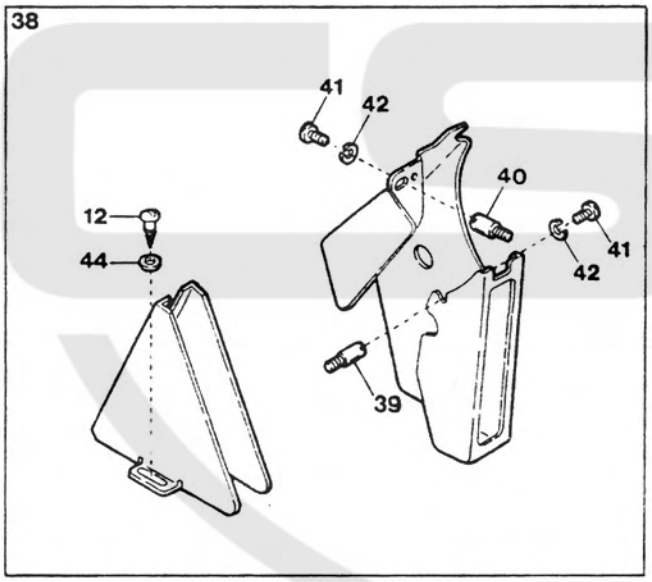
38
41
42
40
12
44
41
42
39

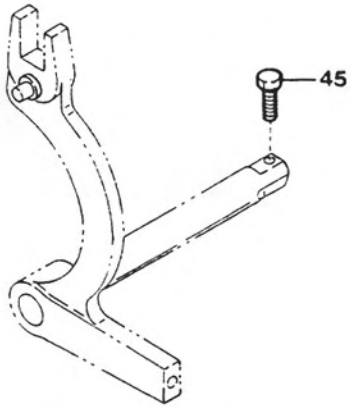
45

Det. No	Parts. No	Description
1	46-1001-5-174	Bobbin Winder Assembly
2	46-1001-5-170	Tension Disc
3	46-1001-5-169	Tension Spring
4	46-1001-5-171	Spring
5	46-1001-5-168	Bobbin Winder Shaft
6	46-1001-5-173	Bobbin Winder Wheel Assembly
7	46-1000-8-217	Screw(4.37×5)
8	46-1000-8-218	Screw(3.18)
9	46-1000-8-227	Stud Screw(3.18)
10	46-1001-5-172	Bobbin Winder Wheel Stop
11	46-1000-8-219	Screw(3.57×3.5)
12	46-1000-8-246	Screw(5.5×20)
13	46-1001-5-167	Cotton Stand Assembly 3
14	46-1001-5-166	Cotton Stand Base Assembly
15	46-1000-8-244	Screw(6×7)
16	46-1000-8-247	Screw(4.5×22)
17	46-1001-5-157	Pipe
18	46-1001-5-158	Joint for Cotton Stand
19	46-1000-8-220	Screw(5×14)
20	46-1000-8-251	Nut
21	46-1001-5-164	Spool Holder
22	46-1000-8-221	Bolt(5×28)
23	46-1000-8-262	Washer
24	46-1001-5-159	Spool Shaft(B)
25	46-1000-8-265	Spring Washer
26	・・・・・・・・	・・・・・・・・・・・・
27	46-1001-5-162	Spool Stand Base
28	46-1001-5-161	Spool Mat
29	46-1001-5-160	Spool Cushion
30	46-1001-5-163	Spool Holder Support(A)
31	46-1000-8-222	Screw(5×10)
32	・・・・・・・・	・・・・・・・・・・・・
33	・・・・・・・・	・・・・・・・・・・・・
34	46-1001-5-156	Thread Hanger Assembly 3
35	・・・・・・・・	・・・・・・・・・・・・
36	46-1001-5-181	Thread Bushing
37	46-1001-5-182	Thread Guide Spring
38	46-1001-5-175	Belt Cover Assembly
39	46-1000-8-249	Belt Cover Stud(B)
40	46-1000-8-250	Belt Cover Stud(D)

Det. No	Parts. No	Description
41	46-1000-8-223	Screw(4.37-40×8)
42	46-1000-8-264	Spring Washer
43	・・・・・・・・	・・・・・・・・・・・・
44	46-1000-8-263	Washer
45	48-1092-0-022	Bolt(4.37)

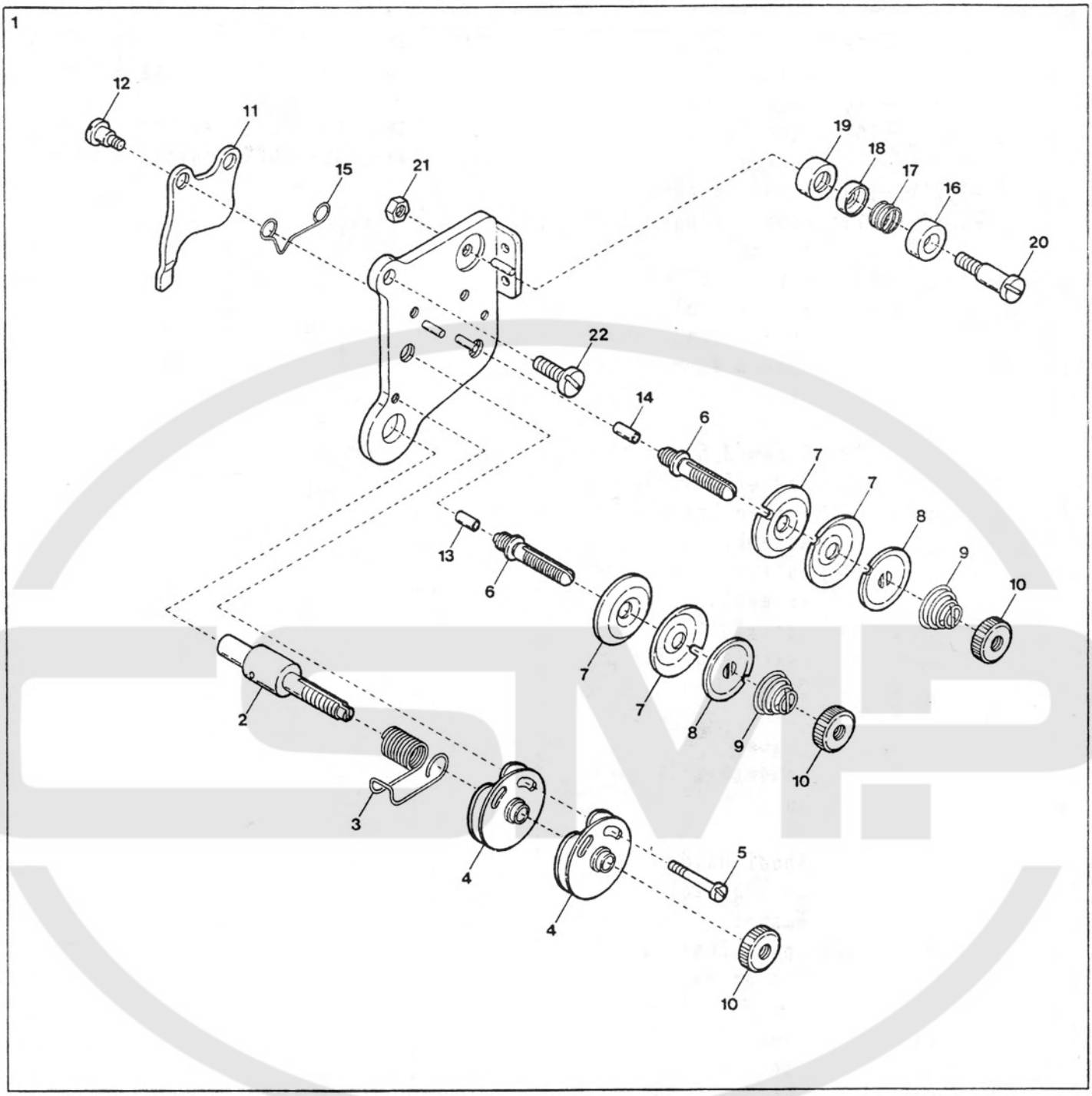
1
12
11
15
21
19
18
17
16
20
22
14
6
7
7
8
9
10
13
6
7
7
8
9
10
2
3
4
4
5
10

Det. No	Parts. No	Description
1	46-1001-5-111	Upper Tension Control Assembly
2	46-1001-5-017	Tension Stud
3	46-1001-5-018	Thread Take-up Spring
4	46-1001-5-016	Spring Guide Assembly
5	46-1000-8-204	Screw 2.38
6	46-1001-5-110	Tension Stud
7	46-1001-5-011	Tension Disc
8	46-1001-5-010	Tension Disc Washer
9	46-1001-5-009	Tension Spring
10	46-1000-8-256	Tension Control Nut
11	46-1001-5-014	Tension Release Plate
12	46-1000-8-224	Stud Screw 3.57
13	46-1001-5-013	Pin
14	46-1001-5-012	Pin
15	46-1001-5-015	Tension Release Spring
16	46-1001-5-005	Cap
17	46-1001-5-006	Thread Guide Spring
18	46-1001-5-007	Disc
19	46-1001-5-008	Thread Guide Bracket
20	46-1000-8-225	Stud Screw
21	46-1000-8-253	Nut 3.57
22	46-1000-8-201	Screw(4.37-40×16)

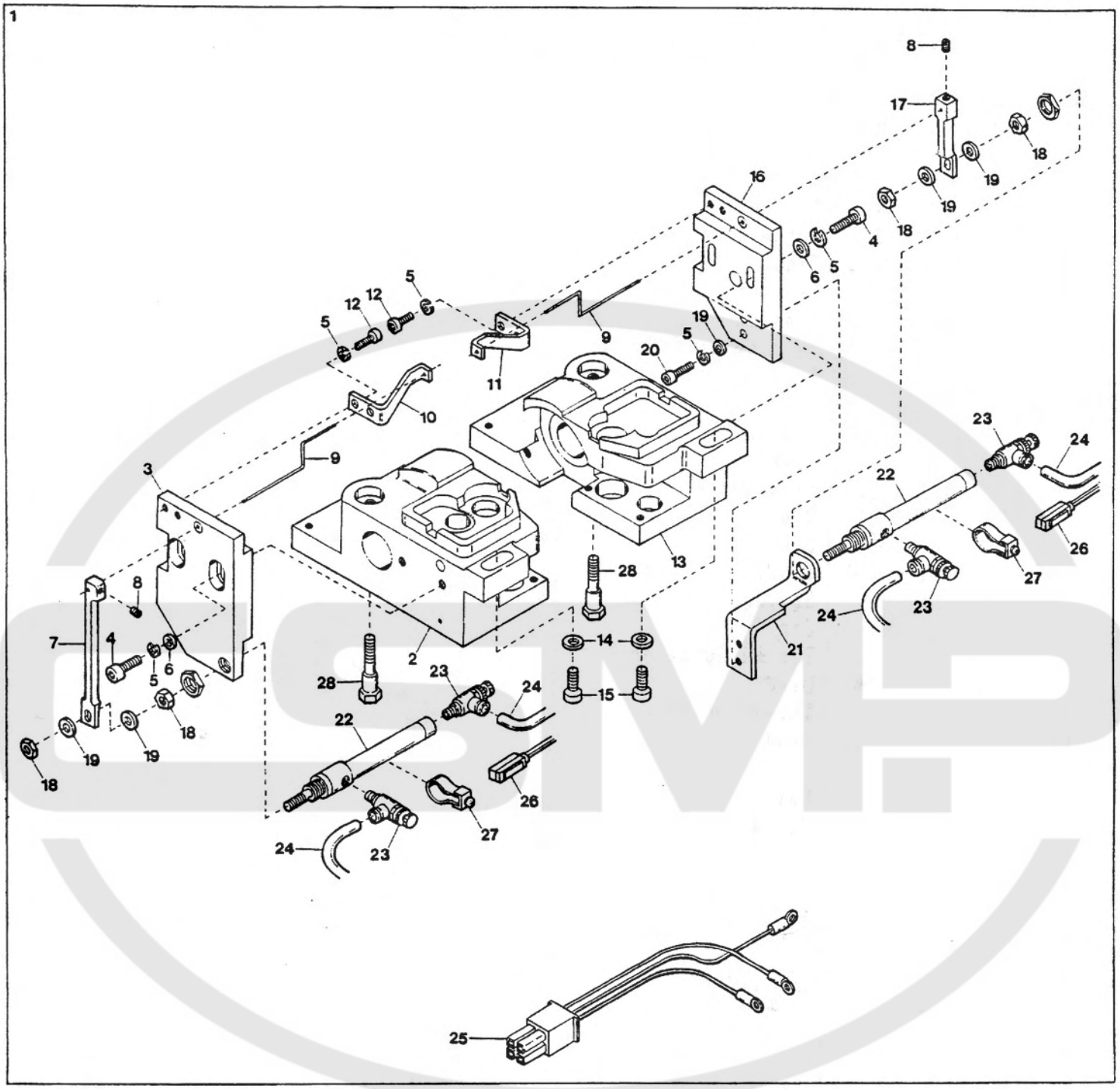

SINGLE DOUBLE

405 406

PATCH GUIDES

Det. No	Parts. No	Description
1	48-1125-5-627	Bobbin Thread Monitor, Complete
2	46-1125-5-168	Rotary Hook Base (Left)
3	46-1125-5-149	Holder(Left) Unit
4	46-1000-9-749	Screw(M4-0.7×16)
5	46-1000-0-644	Spring Washer
6	46-1000-0-538	Washer
7	46-1125-5-155	Sensing Bar Connection(Left)
8	46-1016-0-001	Screw(M4-0.7×4)
9	46-1125-5-158	Sensing Bar
10	46-1125-5-157	Sensing Bar Guide (Left)
11	46-1125-5-156	Sensing Bar Guide (Right)
12	46-1000-9-746	Screw(M4-0.7×8)
13	46-1125-5-169	Rotary Hook Base (Right)
14	46-1000-0-663	Washer
15	46-1000-6-197	Screw(1/4-24×22)
16	48-1125-5-148	Holder(Right) Unit
17	46-1125-5-323	Sensing Bar Connection(Right)
18	46-1000-0-015	Nut
19	46-1000-0-665	Washer
20	46-1000-9-748	Screw(M4-0.7×12)
21	46-1125-5-153	Cylinder Support (Right)
22	46-1109-1-017	Cylinder(RMS10-ND-20)
23	48-1109-5-001	Speed Control
24 *	46-1001-0-260	Air Tubing(4×2.5mm)
25	48-1120-0-075	Signal Cord
26	48-1106-6-065	Sensing Switch
27	48-1109-8-008	Band
28	46-1000-6-195	Screw(15/64-28×31)
		* Specify Length.

46 1125.0 405

46 1125.0 406

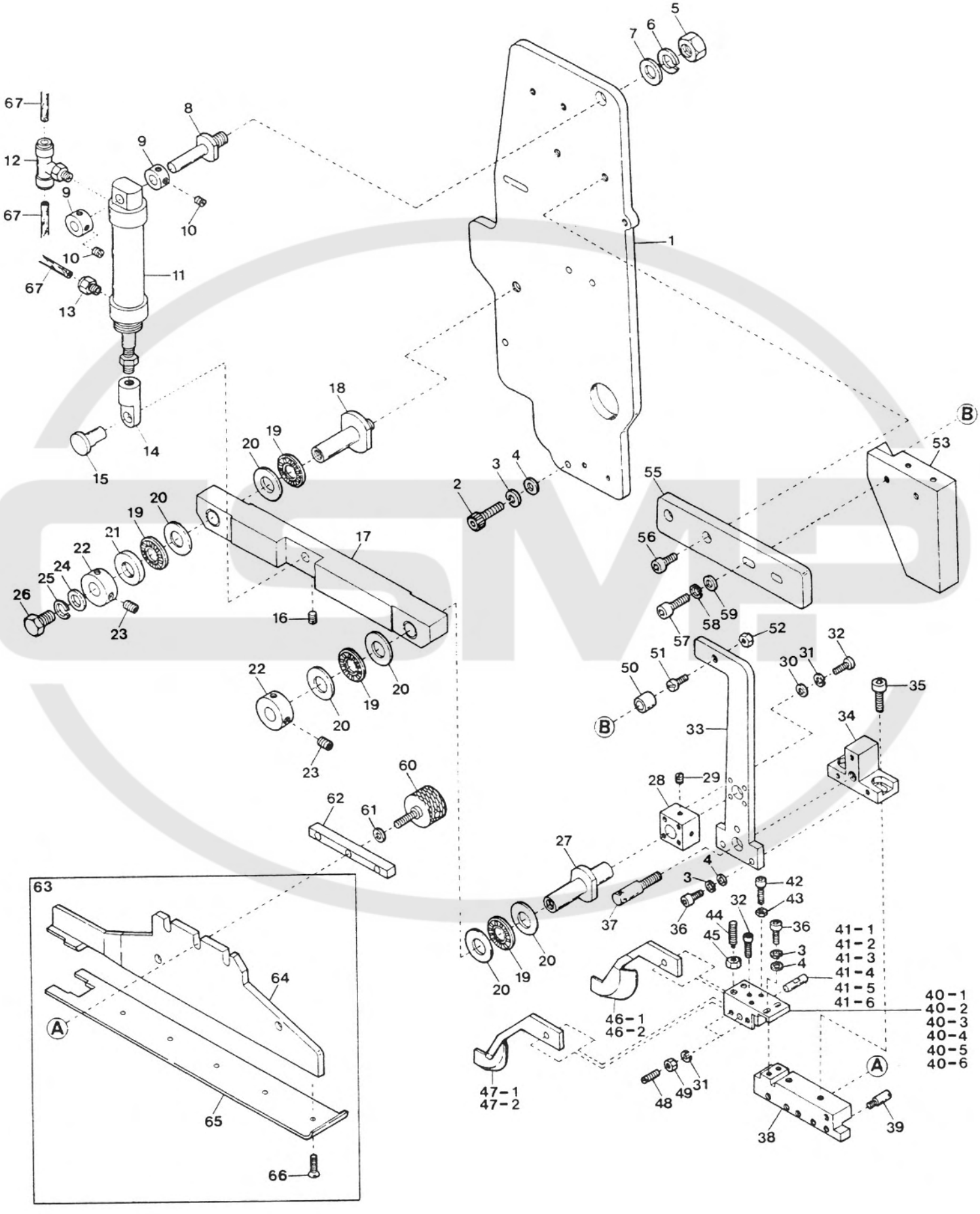
1
2
3
4
5
6
7
8
9
10
11
12
13
14
15
16
17
18
19
20
21
22
23
24
25
26
27
28
29
30
31
32
33
34
35
36
37
38
39
40-1
40-2
40-3
40-4
40-5
40-6
41-1
41-2
41-3
41-4
41-5
41-6
42
43
44
45
46-1
46-2
47-1
47-2
48
49
50
51
52
53
55
56
57
58
59
60
61
62
63
64
65
66
67
A
B

Det. No	Parts. No	Description
1	38-1125-5-939	Head Cover
2	46-1000-9-749	Screw(M4-0.7×16)
3	46-1000-0-644	Spring Washer
4	46-1000-0-665	Washer
5	46-1000-0-260	Nut
6	46-1000-0-439	Spring Washer
7	46-1000-0-612	Washer
8	46-1001-4-523	Cylinder Pin
9	46-1007-7-296	Collar
10	46-1000-7-650	Screw(11/64-40×5)
11	46-1001-0-247	Cylinder(EMD20×30)
12	46-1001-0-056	T-Connector(φ4-1/8)
13	46-1001-0-055	Connector(φ4-1/8)
14	46-1001-0-285	I-Knuckle(8mm)
15	46-1001-4-533	Connecting Pin
16	46-1000-3-659	Screw(M5-0.8×5)
17	46-1001-4-536	Patch Guide Moving Lever
18	48-1125-5-246	Lever Pin(Rear)
19	46-1001-4-571	Thrust Bearing
20	46-1001-4-572	Thrust Ring
21	48-1125-5-231	Spacer
22	46-1007-7-286	Collar
23	46-1000-3-635	Screw(1/4-40×6)
24	46-1000-0-666	Washer
25	46-1000-0-676	Spring Washer
26	46-1000-9-777	Screw(M8-1.25×14)
27	46-1001-5-484	Lever Pin(Front)
28	46-1001-5-485	Adjusting Block
29	46-1000-3-662	Screw(M6-1×6)
30	46-1000-0-014	Washer
31	46-1000-0-002	Spring Washer
32	46-1000-9-745	Screw(M3-0.5×15)
33	46-1001-5-486	Patch Guide Lever
34	48-1125-5-745	Patch Guide Holder
35	46-1000-9-970	Screw(M6-1×20)
36	46-1000-9-748	Screw(M4-0.7×12)
37	46-1000-6-191	Screw(M8-1.25×12)
38	46-1125-5-103	Mount Block
39	46-1018-0-013	Screwed Pin (M5-0.8×20)
40-1	46-1001-4-537	Block(10mm)
40-2	46-1001-4-538	〃 (12mm)
40-3	46-1001-5-202	〃 (14mm)
40-4	46-1001-5-293	〃 (16mm)
40-5	46-1001-5-294	〃 (18mm)
40-6	46-1001-5-295	〃 (20mm)

Det. No	Parts. No	Description
41-1	46-1001-4-521	Shaft(10mm)
41-2	46-1001-4-522	〃 (12mm)
41-3	46-1001-5-200	〃 (14mm)
41-4	46-1001-5-296	〃 (16mm)
41-5	46-1001-5-297	〃 (18mm)
41-6	46-1001-5-298	〃 (20mm)
42	46-1000-9-744	Screw(M3-0.5×10)
43	46-1000-0-012	Nut
44	46-1001-4-535	Spring Plunger
45	46-1000-0-009	Nut
46-1	48-1125-5-855	Jumping Guide(Right) (10mm)
46-2	48-1125-5-723	〃 〃 (12～20mm)
47-1	48-1125-5-856	Jumping Guide(Left) (10mm)
47-2	48-1125-5-724	〃 〃 (12～20mm)
48	48-1015-0-003	Adjusting Screw (M3-0.5×6)
49	48-1000-0-488	Nut
50	46-1001-4-186	Cam Roller
51	46-1000-6-186	Screw(M6-1×10)
52	46-1000-0-063	Nut
53	38-1125-6-177	Patch Guide Cam
54	・・・・・・・・	・・・・・・・・・・・・
55	38-1125-6-178	Patch Guide Cam Arm
56	46-1000-9-980	Screw(M6-1×10)
57	46-1000-9-977	Screw(M6-1×25)
58	46-1000-0-667	Spring Washer
59	46-1000-0-663	Washer
60	46-1125-5-112	Fixing Knob
61	46-1000-0-669	Washer
62	46-1125-5-113	Fixing Plate
63	――――――	Patch Guide, C. (See Page 30)
64	――――――	Patch Guide(Upper) (See Page 30)
65	――――――	Patch Guide(Lower) (See Page 30)
66	46-1000-9-734	Screw(M2-0.4×6)
67 *	46-1001-0-260	Air Tubing(4×2.5mm)

* Specify Length.

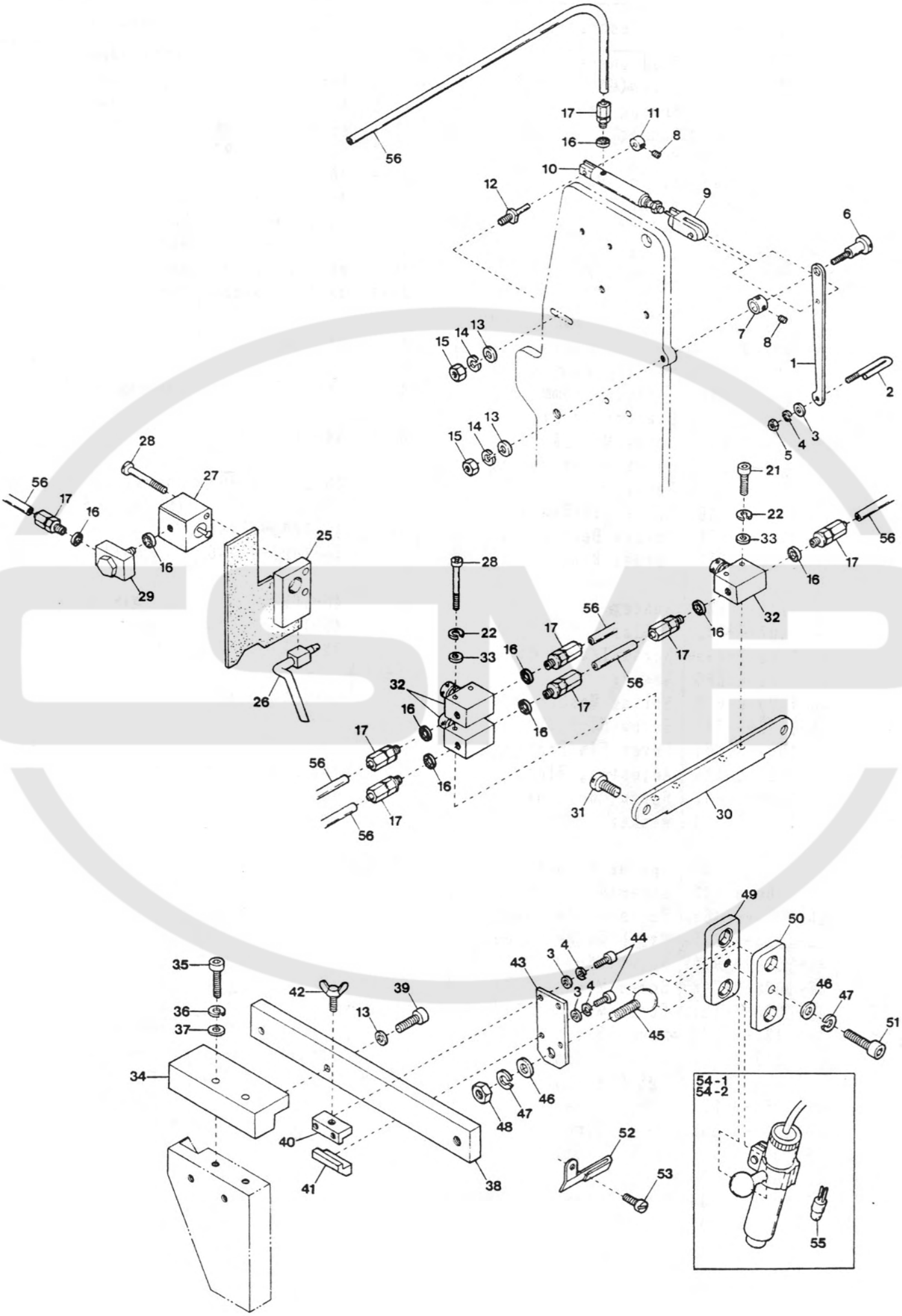
56
17
16
11
8
10
12
9
6
7
8
1
2
15
14
13
3
4
5
28
27
25
29
26
21
22
33
32
30
31
54-1
54-2
55
35
36
37
34
42
39
40
41
38
43
44
45
49
50
46
47
48
51
52
53

Det. No	Parts. No	Description
1	46-1001-4-566	Wiper Lever
2	46-1001-4-525	Wiping Bar
3	46-1000-0-665	Washer
4	46-1000-0-644	Spring Washer
5	46-1000-0-015	Nut
6	46-1000-6-192	Screw(M5-0.8×11)
7	46-1009-4-562	Collar
8	46-1000-3-637	Screw(1/8-44×2.5)
9	46-1001-0-283	Y-Knuckle(3mm)
10	46-1001-0-249	Cylinder(MS10PFS10)
11	46-1008-0-714	Collar
12	46-1001-4-539	Wiper Lever Pin
13	46-1000-0-669	Washer
14	46-1000-0-600	Spring Washer
15	46-1000-0-009	Nut
16	46-1000-0-623	Gasket
17	46-1001-0-258	Connector
18	. . . . .	. . . . .
19	. . . . .	. . . . .
20	. . . . .	. . . . .
21	46-1000-9-801	Screw(M3-0.5×20)
22	46-1000-0-002	Spring Washer
23	. . . . .	. . . . .
24	. . . . .	. . . . .
25	46-1001-4-971	Cylinder Holder
26	46-1001-5-443	Oil Return Pipe
27	46-1001-0-246	Cylinder(SPS-12×5)
28	46-1000-9-768	Screw(M3-0.5×30)
29	46-1001-0-019	L-Connector
30	46-1001-4-430	Support
31	46-1000-4-642	Screw(1/4-24×12)
32	46-1001-0-054	Speed Control
33	46-1000-0-014	Washer
34	46-1001-4-529	Block
35	46-1000-9-753	Screw(M6-1×30)
36	46-1000-0-667	Spring Washer
37	46-1000-0-663	Washer
38	46-1001-4-530	Adjusting Plate
39	46-1000-9-752	Screw(M5-0.8×15)
40	46-1001-4-531	Block(Upper)

Det. No	Parts. No	Description
41	46-1001-4-532	Block(Lower)
42	46-1000-9-911	Screw(M5-0.8×8)
43	46-1001-4-528	Support
44	46-1000-9-747	Screw(M4-0.7×10)
45	46-1000-6-187	Ball Screw (M8-1.25×23)
46	46-1000-0-666	Washer
47	46-1000-0-676	Spring Washer
48	46-1000-0-016	Nut
49	46-1001-4-224	Lamp Holder(Left)
50	46-1001-4-225	Lamp Holder(Right)
51	46-1000-9-758	Screw(M8-1.25×30)
52	46-1001-4-260	Needle Thread Eyelet
53	46-1000-5-000	Screw(9/64-40×5.7)
54-1	48-1120-0-063	Work Locating Lamp, C.(H Type)
54-2	48-1120-0-064	〃 〃 C.(- Type)
55	48-1120-0-083	Lamp
56 *	46-1001-0-260	Air Tubing(4×2.5mm)
		* Specify Length.

Yamato doesn't supply 3 mm tubing in case someone asks.

PETRA MLČOCHOVÁ

Also see our supplier SMC or any other „czech" supplier of tubing.

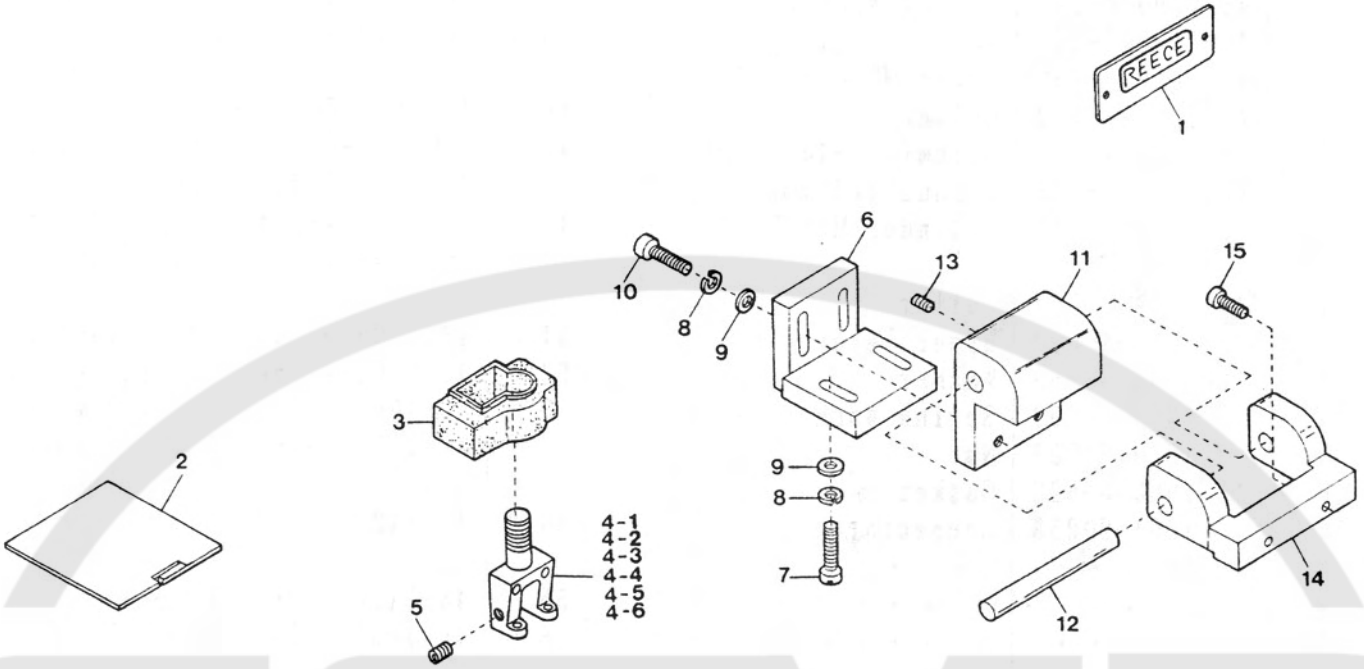
REECE
1
2
3
4-1
4-2
4-3
4-4
4-5
4-6
5
6
7
8
9
10
11
12
13
14
15

HINGE PARTS

Det. No	Parts. No	Description
1	46-1001-4-409	Brand Name Plate
2	46-1001-4-408	Slide Plate
3	48-1125-5-524	Rubber
4-1	48-1900-0-001	Needle Head(10mm)
4-2	48-1900-0-002	〃 (12mm)
4-3	48-1900-0-003	〃 (14mm)
4-4	48-1900-0-004	〃 (16mm)
4-5	48-1900-0-005	〃 (18mm)
4-6	48-1900-0-006	〃 (20mm)
5	48-1026-0-004	Screw(1/8-40×2.5)
6	46-1001-4-425	Hinge(Lower)
7	46-1000-9-977	Screw(M6-1×25)
8	46-1000-0-667	Spring Washer
9	46-1000-0-663	Washer
10	46-1000-9-970	Screw(M6-1×20)
11	46-1001-4-424	Hinge(Middle)
12	46-1001-4-411	Hinge Shaft
13	46-1000-9-736	Screw(M4-0.7×6)
14	46-1001-4-423	Hinge(Upper)
15	46-1000-5-061	Screw(1/4-24×16.7)

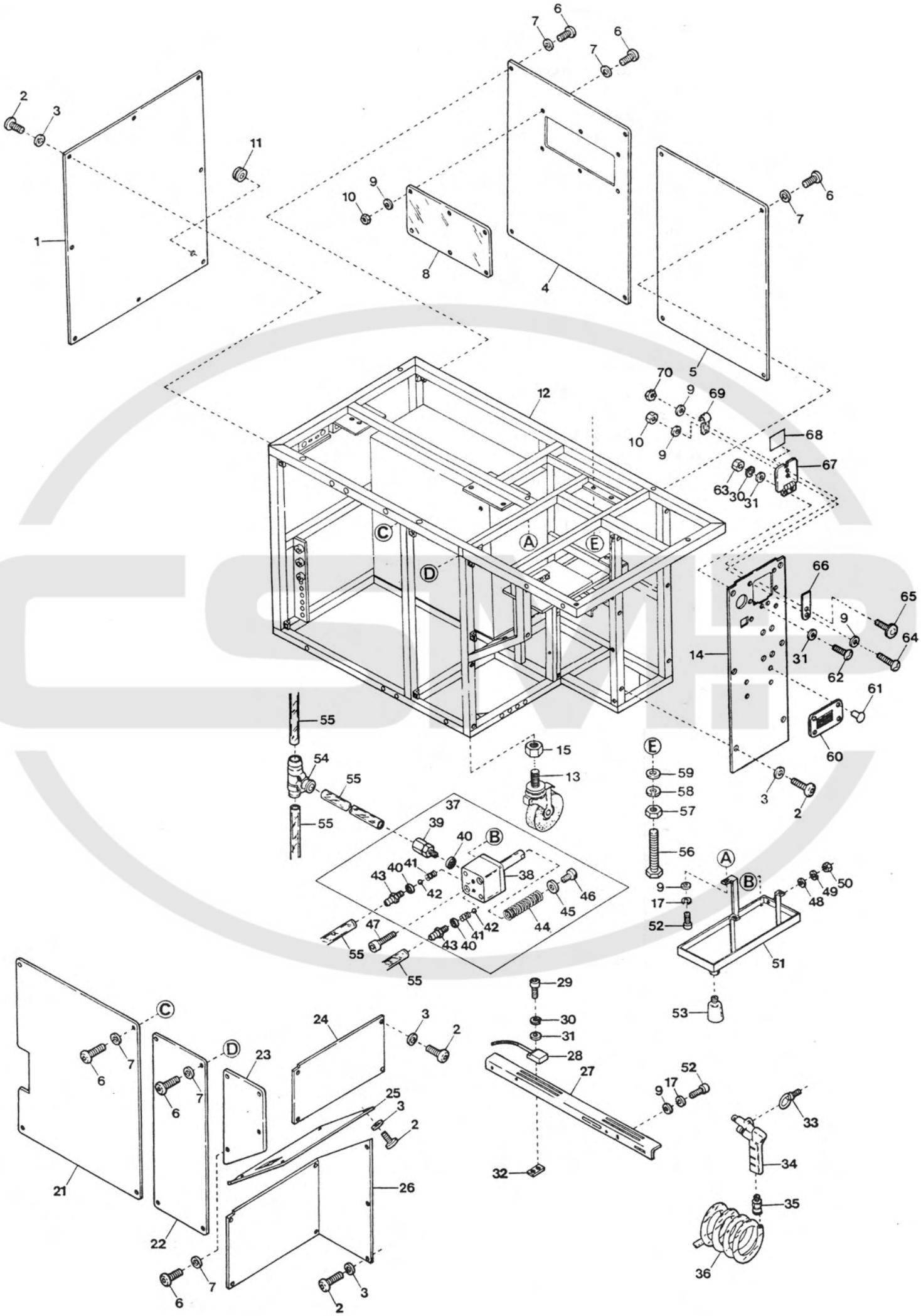
1
2
3
4
5
6
7
8
9
10
11
12
13
14
15
21
22
23
24
25
26
27
28
29
30
31
32
33
34
35
36
37
38
39
40
41
42
43
44
45
46
47
48
49
50
51
52
53
54
55
56
57
58
59
60
61
62
63
64
65
66
67
68
69
70
A
B
C
D
E

Det. No	Parts. No	Description
1	46-1001-4-728	Frame Cover(3)
2	46-1000-9-774	Screw(M4-0.7×9.7)
3	46-1000-0-670	Washer
4	48-1125-5-502	Frame Cover(4)
5	48-1125-5-503	Frame Cover(5)
6	48-1000-5-612	Screw(M6-1×12)
7	46-1000-0-663	Washer
8	46-1001-4-584	Sight Window
9	46-1000-0-665	Washer
10	46-1000-0-015	Nut
11	46-1001-0-958	Cord Bushing
12	48-1125-5-852	Frame
13	46-1001-5-224	Caster
14	38-1125-5-938	Control Box Cover
15	46-1000-0-065	Nut
16	46-1000-9-974	Screw(M4-0.7×8)
17	46-1000-0-644	Spring Washer
18	・・・・・・・	・・・・・・・・・・・
19	・・・・・・・	・・・・・・・・・・・
20	・・・・・・・	・・・・・・・・・・・
21	48-1125-5-500	Frame Cover(2)
22	48-1125-5-499	Frame Cover(1)
23	38-1125-5-078	Frame Cover(9)
24	48-1125-5-523	Frame Cover(6)
25	46-1001-4-924	Frame Cover(7)
26	46-1001-4-925	Frame Cover(8)
27	48-1125-5-445	Sensing Switch Rail
28	48-1106-6-014	Sensing Switch
29	46-1000-9-745	Screw(M3-0.5×15)
30	46-1000-0-002	Spring Washer
31	46-1000-0-014	Washer
32	46-1001-4-780	Nut Plate
33	46-1000-6-226	Eye Bolt(M6-1×14)
34	46-1001-5-475	Air Gun
35	46-1001-0-264	Connector(φ6-1/4)
36	46-1001-0-256	Spiral Tube(6×4mm)
37	46-1001-5-220	Oil Return Pump, C.
38	46-1001-0-304	Cylinder(SPD20×10)
39	46-1001-0-258	Connector
40	46-1000-0-623	Gasket

Det. No	Parts. No	Description
41	46-1003-6-104	Spring
42	46-1001-5-221	Steel Ball
43	46-1001-0-018	Connector
44	46-1001-4-977	Pump Cylinder Spring
45	46-1000-0-555	Washer
46	46-1000-9-751	Screw(M5-0.8×10)
47	46-1000-6-229	Screw(M5-0.8×40)
48	46-1000-0-426	Washer
49	46-1000-0-600	Spring Washer
50	46-1000-0-009	Nut
51	46-1001-4-770	Oil Pan
52	46-1000-9-747	Screw(M4-0.7×10)
53	46-1001-4-656	Oil Retainer
54	46-1001-0-271	T-Connector
55 *	46-1001-0-260	Air Tubing(4×2.5mm)
56	46-1000-6-232	Bolt(M8-1.25×80)
57	46-1000-0-016	Nut
58	46-1000-0-676	Spring Washer
59	46-1000-0-666	Washer
60	46-1001-8-826	Model Plate
61	46-1034-0-005	Rivet
62	46-1000-9-994	Screw(M3-0.5×8)
63	46-1000-0-012	Nut
64	46-1000-9-992	Screw(M4-0.7×10)
65	46-1000-6-434	Screw(11/64-40×6)
66	38-1125-5-942	Front Cover Stop
67	38-1125-5-941	Front Cover
68	38-1039-0-075	Sticker
69	38-1125-3-220	Stop Spring
70	46-1000-0-335	Nut

* Specify Length.

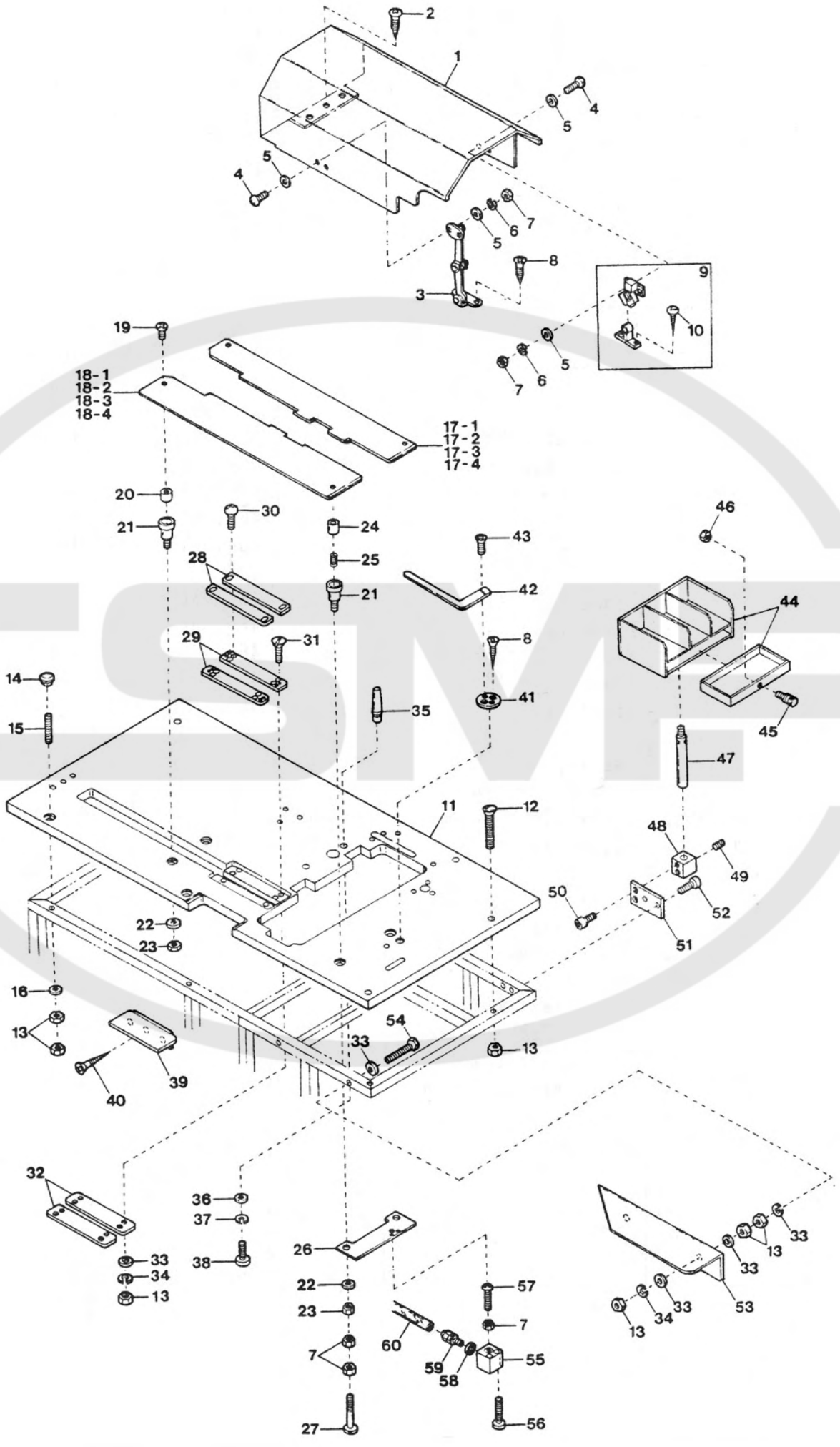
1
2
3
4
5
6
7
8
9
10
11
12
13
14
15
16
17-1
17-2
17-3
17-4
18-1
18-2
18-3
18-4
19
20
21
22
23
24
25
26
27
28
29
30
31
32
33
34
35
36
37
38
39
40
41
42
43
44
45
46
47
48
49
50
51
52
53
54
55
56
57
58
59
60

Det. No	Parts. No	Description
1	46-1001-4-512	Mechanism Cover
2	46-1000-6-905	Wood Screw(φ5.1×20)
3	46-1001-4-655	Cover Stay
4	46-1000-9-994	Screw(M3-0.5×8)
5	46-1000-0-014	Washer
6	46-1000-0-002	Spring Washer
7	46-1000-0-012	Nut
8	46-1000-9-814	Wood Screw(φ3.1×20)
9	46-1001-4-720	Cover Latch
10	46-1000-6-203	Wood Screw(φ2.4×16)
11	38-1960-1-008	Table Top
12	46-1000-6-196	Bolt(M8-1.25×57)
13	46-1000-0-016	Nut
14	46-1000-0-070	Hanging Nut
15	46-1000-9-858	Hanging Bolt (M8-1.25×75)
16	46-1000-0-429	Washer
17-1	48-1125-5-931	Slide Plate(Right) (10,12,14mm)
17-2	48-1125-5-933	〃 (16mm)
17-3	48-1125-5-935	〃 (18mm)
17-4	48-1125-5-937	〃 (20mm)
18-1	48-1125-5-930	Slide Plate(Left) (10,12,14mm)
18-2	48-1125-5-932	〃 (16mm)
18-3	48-1125-5-934	〃 (18mm)
18-4	48-1125-5-936	〃 (20mm)
19	46-1000-9-770	Screw(M4-0.7×8)
20	46-1001-4-032	Holding Pin
21	46-1001-5-222	Slide Plate Holder
22	46-1000-0-433	Washer
23	46-1000-0-421	Nut
24	46-1001-5-223	Stop Pin
25	46-1001-4-056	Spring
26	38-1125-6-113	Cylinder Holder
27	46-1000-6-223	Screw(M3-0.5×55)
28	48-1125-5-505	Plate
29	48-1125-5-506	Plate Support
30	46-1000-9-954	Screw(M6-1×8)

Det. No	Parts. No	Description
31	46-1000-9-807	Screw(M8-1.25×40)
32	48-1125-5-507	Nut Plate
33	46-1000-0-666	Washer
34	46-1000-0-676	Spring Washer
35	48-1125-5-565	Machine Stay
36	48-1000-0-605	Washer
37	46-1000-0-667	Spring Washer
38	46-1000-9-970	Screw(M6-1×20)
39	46-1001-4-659	Plate
40	46-1000-6-209	Wood Screw (φ3.5×21.5)
41	46-1001-4-661	Plate
42	46-1001-4-675	Stay Holder
43	46-1000-6-227	Screw(M4-0.7×5)
44	46-1001-4-680	Tray
45	46-1000-6-444	Knob
46	46-1000-0-332	Nut
47	46-1001-4-302	Mount Shaft
48	46-1001-4-300	Shaft Holder
49	46-1000-9-740	Screw(M6-1×10)
50	46-1000-9-747	Screw(M4-0.7×10)
51	46-1001-4-301	Support
52	46-1000-9-755	Screw(M6-1×45)
53	48-1125-5-885	Extension Plate
54	46-1000-6-232	Bolt(M8-1.25×80)
55	46-1001-0-248	Cylinder(SPS-12×5)
56	46-1000-9-801	Screw(M3-0.5×20)
57	46-1000-9-793	Screw(M3-0.5×35)
58	46-1000-0-623	Gasket
59	46-1001-0-258	Connector
60 *	46-1001-0-260	Air Tubing(4×2.5mm)
		* Specify Length.

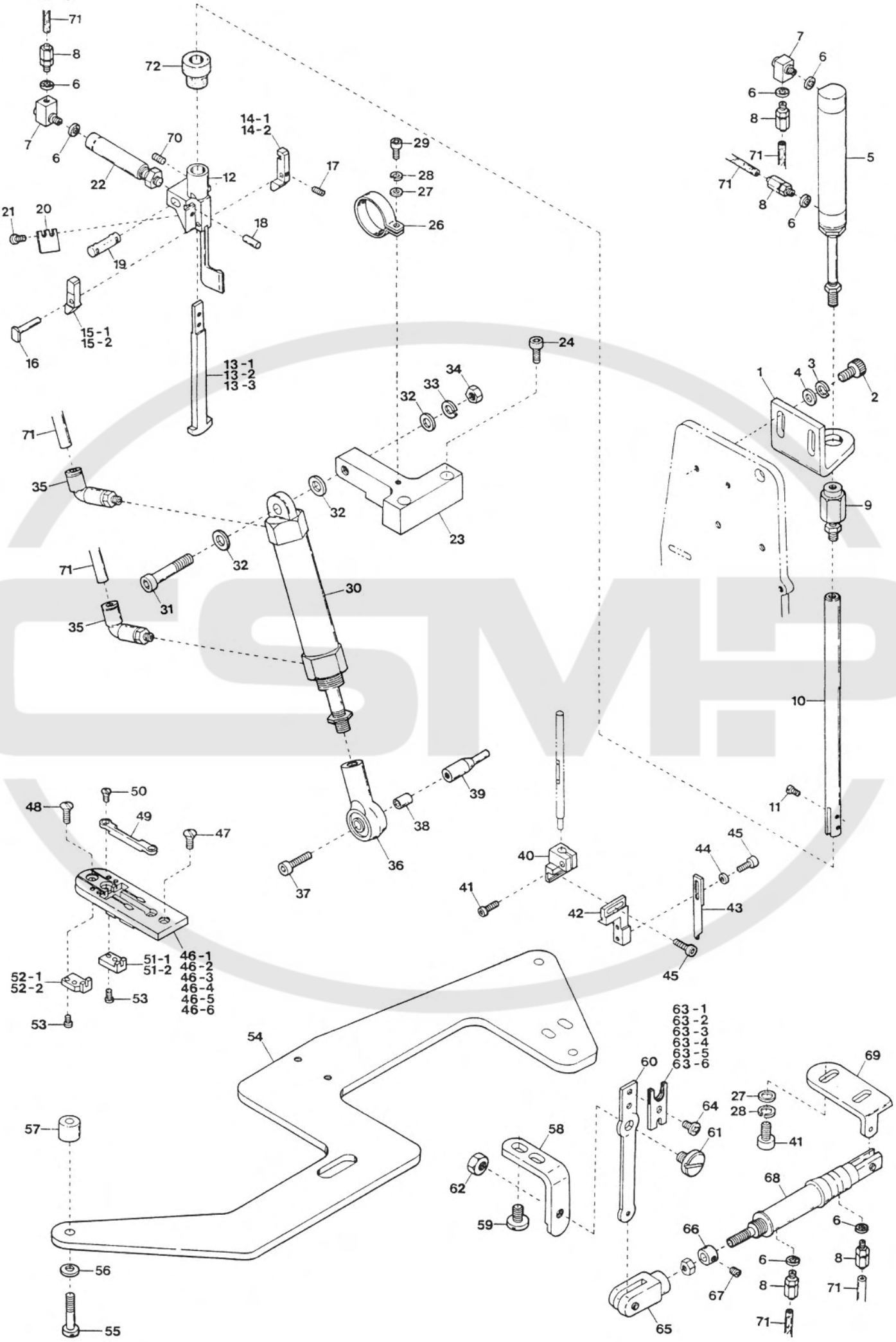
71
8
6
7
6
72
70
22
12
14-1
14-2
17
29
28
27
26
21
20
18
19
15-1
15-2
16
13-1
13-2
13-3
24
34
33
32
71
35
32
23
32
71
31
30
35
7
6
6
8
71
71
8
6
5
1
4
3
2
9
10
11
39
38
36
37
40
41
42
44
45
43
45
48
50
49
47
46-1
46-2
46-3
46-4
46-5
46-6
51-1
51-2
52-1
52-2
53
53
54
57
56
55
63-1
63-2
63-3
63-4
63-5
63-6
60
64
61
58
62
59
69
27
28
41
68
66
67
65
6
8
6
8
71
71

Det. No	Parts. No	Description
1	46-1001-4-481	Cylinder Support
2	46-1000-9-752	Screw(M5-0.8×10)
3	46-1000-0-600	Spring Washer
4	46-1000-0-669	Washer
5	46-1001-0-241	Cylinder(MS16ND-40P)
6	46-1000-0-623	Gasket
7	46-1001-0-019	L-Connector
8	46-1001-0-258	Connector
9	46-1001-4-840	Universal Joint
10	46-1001-4-482	Shaft
11	46-1000-6-178	Screw(1/8-44×4.8)
12	48-1125-5-718	Mount Block
13-1	46-1001-4-483	Pick-up(10,12,14mm)
13-2	46-1001-5-302	〃 (16,18mm)
13-3	46-1125-5-696	〃 (20mm)
14-1	48-1125-5-430	Thread Holder(Right) (10,12,14mm)
14-2	48-1125-5-600	〃 (16,18,20mm)
15-1	48-1125-5-431	Thread Holder(Left) (10,12,14mm)
15-2	48-1125-5-601	〃 (16,18,20mm)
16	48-1125-5-432	Pin
17	46-1016-0-000	Screw(M3-0.5×3)
18	46-1001-4-577	Press Pin
19	46-1001-4-573	Thread Holder Pin
20-1	46-1001-4-244	Blade(10,12,14mm)
20-2	46-1001-5-292	〃 (16,18,20mm)
21	46-1000-1-222	Screw(1/8-44×4.8)
22	46-1109-1-060	Cylinder(MS6-NFS-5)
23	48-1125-5-715	Cylinder Support
24	46-1000-9-976	Screw(M6-1×15)
25	・・・・・・・・	・・・・・・・・・・・・
26	46-1001-0-721	Cord Clamp(φ19-11N)
27	46-1000-0-665	Washer
28	46-1000-0-644	Spring Washer
29	46-1000-9-748	Screw(M4-0.7×12)
30	38-1109-1-038	Cylinder(M20-PD10)
31	46-1000-6-220	Screw(M8-1.25×40)
32	46-1000-0-666	Washer
33	46-1000-0-676	Spring Washer
34	46-1000-0-016	Nut
35	46-1001-0-057	Elbow Connector (φ4-1/8)
36	46-1001-4-402	Rod End
37	46-1000-9-970	Screw(M6-1×20)
38	48-1125-5-717	Spacer
39	48-1125-5-716	Moving Lever
40	48-1125-5-435	Adjusting Block

Det. No	Parts. No	Description
41	46-1000-9-746	Screw(M4-0.7×8)
42	48-1125-5-722	Center Knife Holder
43	48-1125-5-721	Center Knife
44	46-1000-0-014	Washer
45	48-1011-0-002	Screw(M3-0.5×5)
46-1	46-1001-4-426	Throat Plate(10mm)
46-2	46-1001-4-427	〃 (12mm)
46-3	46-1001-4-489	〃 (14mm)
46-4	46-1001-5-254	〃 (16mm)
46-5	46-1001-5-255	〃 (18mm)
46-6	46-1001-5-256	〃 (20mm)
47	46-1000-9-127	Screw(11/64-40×8)
48	46-1000-9-142	Screw(9/64-40×4.8)
49	48-1125-5-594	Lower Knife
50	46-1000-1-613	Screw(3/32-56×3.1)
51-1	46-1001-4-505	Fixed Knife(Right) (10,14,16,18,20mm)
51-2	46-1001-4-507	〃 (12mm)
52-1	46-1001-4-506	Fixed Knife(Left) (10,14,16,18,20mm)
52-2	46-1001-4-508	〃 (12mm)
53	46-1000-4-404	Screw(3/32-56×5.1)
54	48-1125-5-433	Cylinder Support
55	46-1000-5-121	Screw(11/64-40×28)
56	46-1000-0-538	Washer
57	48-1125-5-434	Spacer
58	46-1001-4-501	Support Plate
59	46-1000-7-678	Screw(1/4-40×8)
60	46-1125-5-166	Knife Holder
61	46-1000-6-198	Screw(1/4-40×7.5)
62	46-1000-0-419	Nut
63-1	46-1001-4-503	Movable Knife(10mm)
63-2	46-1001-4-504	〃 (12mm)
63-3	46-1001-5-201	〃 (14mm)
63-4	46-1001-5-299	〃 (16mm)
63-5	46-1001-5-300	〃 (18mm)
63-6	46-1001-5-301	〃 (20mm)
64	46-1000-4-358	Screw(9/64-40×5.6)
65	46-1001-0-283	Y-Knuckle(3mm)
66	46-1001-4-502	Collar
67	46-1016-0-001	Screw(M4-0.7×4)
68	46-1001-0-242	Cylinder(MS10-PD10)
69	46-1001-4-510	Cylinder Support
70	46-1000-9-200	Screw(15/64-28×9.5)
71 *	46-1001-0-260	Air Tubing(4×2.5mm)
72	46-1001-4-579	Shaft Cover(Rubber)
		* Specify Length.

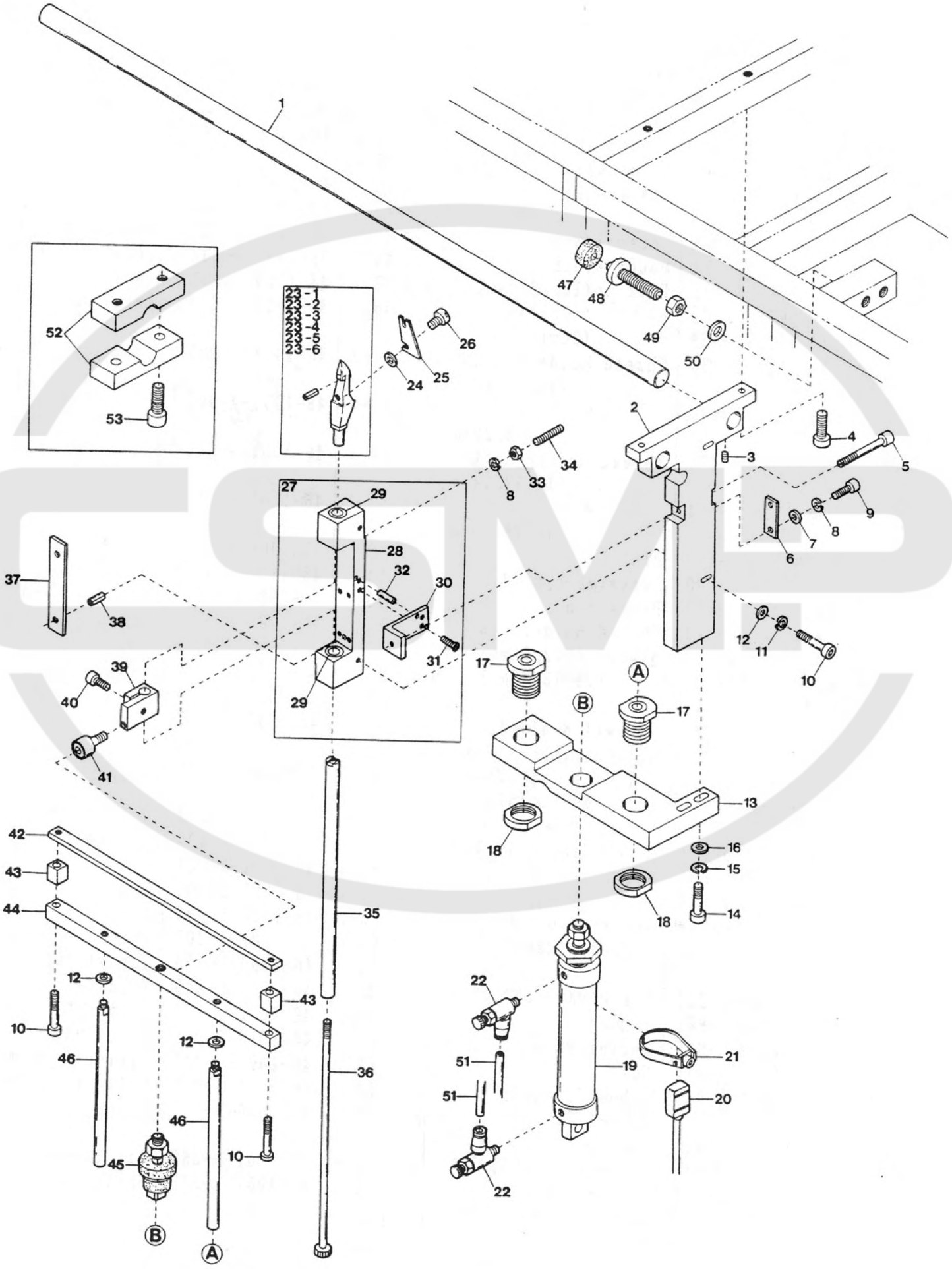
1
2
3
4
5
6
7
8
9
10
11
12
13
14
15
16
17
18
19
20
21
22
23-1
23-2
23-3
23-4
23-5
23-6
24
25
26
27
28
29
30
31
32
33
34
35
36
37
38
39
40
41
42
43
44
45
46
47
48
49
50
51
52
53
A
B

Det. No	Parts. No	Description
1	48-1125-5-421	Slide Shaft
2	48-1125-5-420	Shaft Holder(Front)
3	46-1000-9-740	Screw(M6-1×10)
4	46-1000-9-936	Screw(M8-1.25×20)
5	46-1000-6-176	Screw(M6-1×50)
6	46-1001-4-129	Plate
7	46-1000-0-665	Washer
8	46-1000-0-644	Spring Washer
9	46-1000-9-747	Screw(M4-0.7×10)
10	46-1000-9-754	Screw(M6-1×35)
11	46-1000-0-667	Spring Washer
12	46-1000-0-663	Washer
13	46-1001-4-711	Cylinder Holder
14	46-1000-9-940	Screw(M8-1.25×35)
15	46-1000-0-676	Spring Washer
16	46-1000-0-666	Washer
17	46-1001-4-899	Guide Bushing
18	46-1001-4-709	Nut
19	48-1109-1-020	Cylinder(REMD25×75)
20	48-1106-6-012	Sensing Switch
21	46-1001-0-300	Band
22	46-1001-0-254	Speed Control
23-1	46-1001-5-216	Tab Finger(10mm)
23-2	46-1001-5-217	〃 (12mm)
23-3	46-1001-5-218	〃 (14mm)
23-4	46-1001-5-466	〃 (16mm)
23-5	46-1001-5-468	〃 (18mm)
23-6	46-1001-5-470	〃 (20mm)
24	46-1000-0-209	Washer
25	46-1001-5-487	Tab Knife
26	46-1000-9-797	Screw(11/128-56×3.2)
27	46-1001-5-237	Tab Finger Holder (Front), C.
28	46-1001-5-246	Tab Finger Holder
29	46-1001-4-707	Bearing
30	46-1001-4-130	Adjusting Piece
31	48-1000-9-781	Screw(M3-0.5×10)
32	48-1000-0-032	Knock Pin
33	46-1000-0-015	Nut
34	46-1000-9-737	Screw(M4-0.7×20)
35	46-1001-5-240	Tab Knife Shaft
36	46-1001-5-243	Lock Screw
37	46-1001-5-242	Spacer
38	46-1000-0-035	Spring Pin
39	46-1001-4-704	Shaft Holder(Front)
40	46-1000-9-752	Screw(M5-0.8×15)

Det. No	Parts. No	Description
41	46-1001-4-144	Bearing
42	48-1125-5-403	Lifting Guide(Upper)
43	46-1001-4-817	Lifting Guide Spacer
44	48-1125-5-404	Lifting Guide(Lower)
45	46-1001-4-842	Universal Joint
46	46-1001-5-257	Guide Shaft
47	46-1001-4-143	Rubber Cushion
48	48-1019-0-026	Bolt(M10-1.5×87)
49	46-1000-0-260	Nut
50	46-1000-0-612	Washer
51 *	46-1001-0-260	Air Tubing(4×2.5mm)
52	46-1001-4-613	Shipping Lock
53	46-1000-9-753	Screw(M6-1×30)
		* Specify Length.

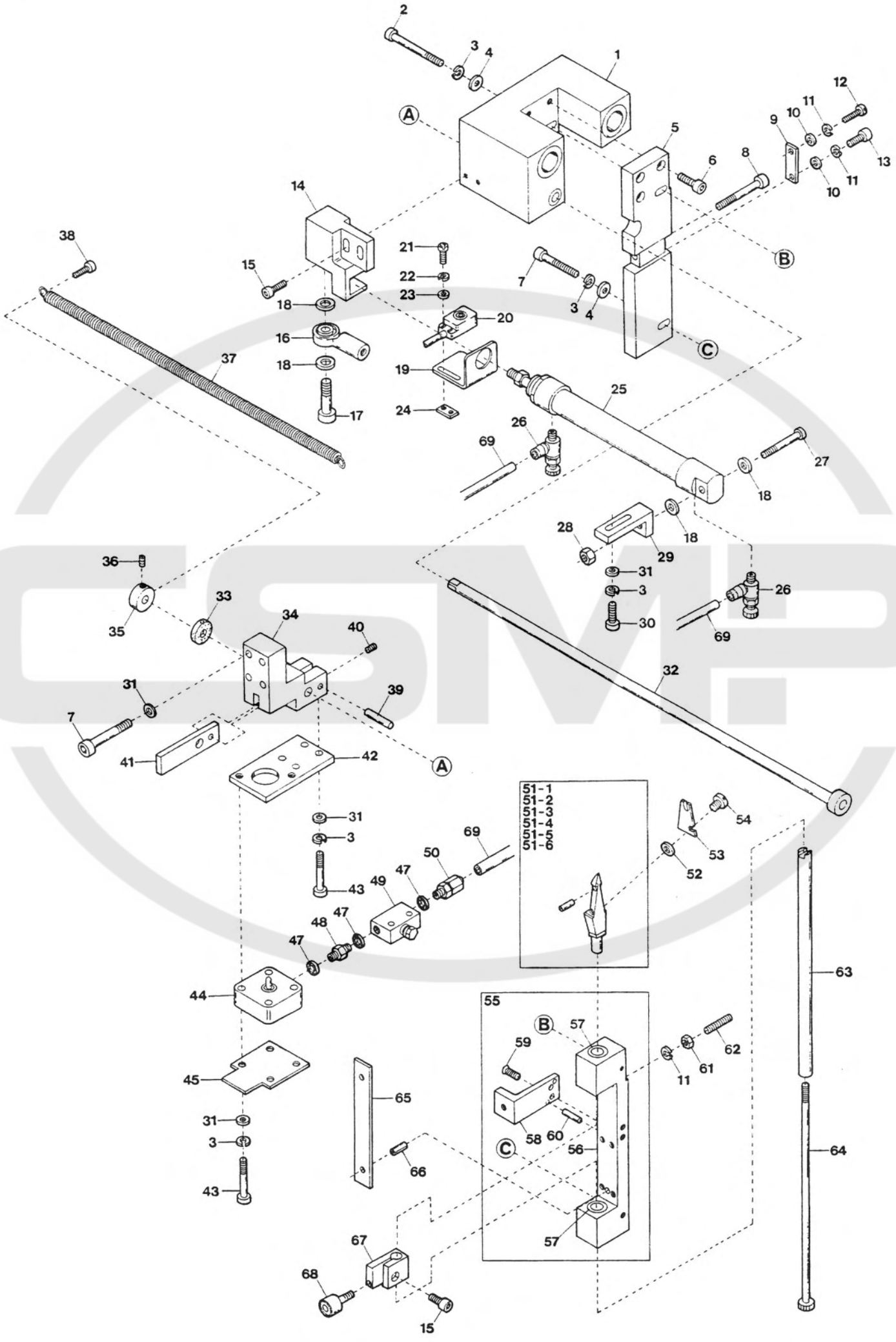
1
2
3
4
5
6
7
8
9
10
11
12
13
14
15
16
17
18
19
20
21
22
23
24
25
26
27
28
29
30
31
32
33
34
35
36
37
38
39
40
41
42
43
44
45
47
48
49
50
51-1
51-2
51-3
51-4
51-5
51-6
52
53
54
55
56
57
58
59
60
61
62
63
64
65
66
67
68
69
A
B
C

Det. No	Parts. No	Description
1	48-1125-5-386	Slide Unit
2	46-1000-6-225	Screw(M6-1×65)
3	46-1000-0-667	Spring Washer
4	46-1000-0-428	Washer
5	48-1125-5-388	Block
6	46-1000-9-970	Screw(M6-1×20)
7	46-1000-9-753	Screw(M6-1×30)
8	46-1000-6-176	Screw(M6-1×50)
9	46-1001-4-129	Plate
10	46-1000-0-665	Washer
11	46-1000-0-644	Spring Washer
12	46-1000-9-992	Screw(M4-0.7×10)
13	46-1000-9-974	Screw(M4-0.7×8)
14	48-1125-5-853	Block
15	46-1000-9-752	Screw(M5-0.8×10)
16	46-1001-4-402	Rod End
17	46-1000-9-972	Screw(M8-1.25×25)
18	46-1000-0-666	Washer
19	48-1125-5-579	Switch Support
20	48-1106-6-014	Sensing Switch
21	46-1000-9-745	Screw(M3-0.5×15)
22	46-1000-0-002	Spring Washer
23	46-1000-0-014	Washer
24	46-1001-4-780	Nut Plate
25	38-1109-1-041	Cylinder (EMD-CA20-200-T1100)
26	46-1001-0-254	Speed Control
27	46-1000-9-940	Screw(M8-1.25×35)
28	46-1000-0-016	Nut
29	48-1125-5-443	Cylinder Support
30	46-1000-9-977	Screw(M6-1×25)
31	46-1000-0-663	Washer
32	48-1125-5-409	Shaft
33	46-1001-4-120	Rubber Cushion
34	48-1125-5-849	Cylinder Holder
35	46-1001-4-119	Collar
36	46-1000-3-662	Screw(M6-1×6)
37	46-1001-4-108	Clamp Shaft Spring
38	46-1000-9-980	Screw(M6-1×10)
39	46-1001-4-117	Holder Shaft
40	46-1000-9-736	Screw(M4-0.7×6)

Det. No	Parts. No	Description
41	48-1125-5-850	Clamp Plate
42	46-1001-4-693	Clamp Cylinder Support
43	46-1000-9-976	Screw(M6-1×45)
44	46-1001-0-244	Cylinder(SPS32-5)
45	48-1125-5-851	Metal Sensing Switch Perceive Plate
46	46-1000-9-964	Screw(M6-1×40)
47	46-1000-0-623	Gasket
48	46-1001-0-032	Nipple(M5)
49	46-1001-0-054	Speed Control
50	46-1001-0-258	Connector
51-1	48-1125-5-390	Tab Finger(10mm)
51-2	48-1125-5-391	〃 (12mm)
51-3	48-1125-5-392	〃 (14mm)
51-4	48-1125-5-393	〃 (16mm)
51-5	48-1125-5-394	〃 (18mm)
51-6	48-1125-5-395	〃 (20mm)
52	46-1000-0-209	Washer
53	46-1125-5-303	Tab Knife
54	46-1000-9-797	Screw(11/128-56×3.2)
55	46-1001-5-238	Tab Finger Holder (Rear), C.
56	46-1001-5-246	Tab Finger Holder
57	46-1001-4-707	Bearing
58	46-1001-4-130	Adjusting Piece
59	48-1000-9-781	Screw(M3-0.5×10)
60	48-1000-0-032	Knock Pin
61	46-1000-0-015	Nut
62	46-1000-9-737	Screw(M4-0.7×20)
63	46-1001-5-240	Tab Knife Shaft
64	46-1001-5-243	Lock Screw
65	46-1001-5-242	Spacer
66	46-1000-0-035	Spring Pin
67	46-1001-4-705	Shaft Holder(Rear)
68	46-1001-4-144	Bearing
69 *	46-1001-0-260	Air Tubing(4×2.5mm)
		* Specify Length.

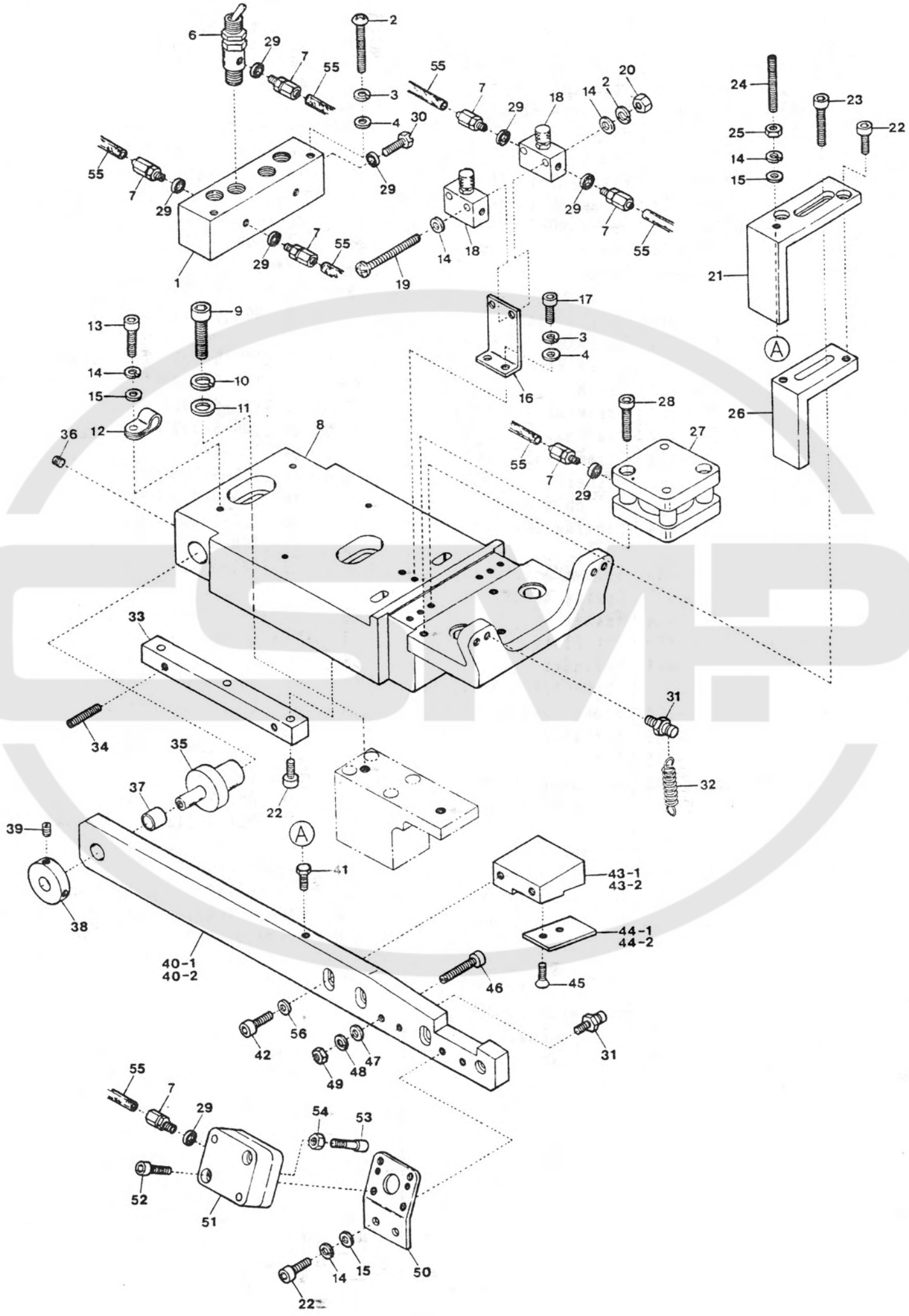
1
2
3
4
6
7
8
9
10
11
12
13
14
15
16
17
18
19
20
21
22
23
24
25
26
27
28
29
30
31
32
33
34
35
36
37
38
39
40-1
40-2
41
42
43-1
43-2
44-1
44-2
45
46
47
48
49
50
51
52
53
54
55
56
A

Det. No	Parts. No	Description
1	46-1001-4-625	Manifold
2	46-1000-6-214	Screw(M3-0.5×40)
3	46-1000-0-002	Spring Washer
4	46-1000-0-014	Washer
5	. . . . .	. . . . .
6	46-1001-0-182	TAC Valve
7	46-1001-0-258	Connector
8	46-1001-5-463	Carriage Block
9	46-1000-9-761	Screw(M10-1.5×55)
10	46-1000-0-439	Spring Washer
11	46-1000-0-612	Washer
12	46-1002-3-381	Cord Clamp(φ10.6-6N)
13	46-1000-9-992	Screw(M4-0.7×10)
14	46-1000-0-644	Spring Washer
15	46-1000-0-665	Washer
16	46-1001-4-606	Support
17	46-1000-9-744	Screw(M3-0.5×10)
18	46-1001-0-054	Speed Control
19	46-1000-9-793	Bolt(M3-0.5×35)
20	46-1000-0-012	Nut
21	46-1001-4-598	Positioner(Upper)
22	46-1000-9-747	Screw(M4-0.7×10)
23	46-1000-9-750	Screw(M4-0.7×20)
24	46-1000-6-213	Screw(M4-0.7×30)
25	46-1000-0-015	Nut
26	46-1001-4-599	Positioner(Lower)
27	46-1001-0-250	Cylinder(SPD-32×20)
28	46-1000-9-755	Screw(M6-1×45)
29	46-1000-0-623	Gasket
30	46-1011-0-067	Plug Screw(M5-0.8×5)
31	46-1000-6-183	Screw(M6-1×6.5)
32	46-1001-4-030	Clamp Foot Spring
33	46-1001-4-005	Adjustment Block
34	46-1000-9-738	Screw(M5-0.8×30)
35	46-1001-4-591	Clamp Foot Shaft
36	46-1000-9-740	Screw(M6-1×10)
37	46-1001-4-654	Bushing
38	46-1001-4-592	Collar
39	46-1000-3-655	Screw(M4-0.7×10)
40-1	46-1001-4-639	Clamp Arm(Right)
40-2	46-1001-4-638	〃 (Left)

Det. No	Parts. No	Description
41	46-1000-6-215	Screw(M4-0.7×10)
42	46-1000-9-976	Screw(M6-1×15)
43-1	46-1001-4-604	Support(Left)
43-2	46-1001-4-603	〃 (Right)
44-1	46-1001-4-011	Plate(Left)
44-2	46-1001-4-010	〃 (Right)
45	46-1000-9-776	Screw(M4-0.7×10)
46	46-1000-6-216	Screw(M6-1×40)
47	46-1000-0-663	Washer
48	46-1000-0-667	Spring Washer
49	46-1000-0-011	Nut
50	46-1001-4-597	Cylinder Bracket
51	46-1001-0-251	Cylinder(SPD-20-5)
52	46-1000-9-935	Screw(M5-0.8×20)
53	46-1001-4-605	Screw
54	46-1000-0-009	Nut
55 *	46-1001-0-260	Air Tubing(4×2.5mm)
56	46-1000-0-399	Washer

* Specify Length.

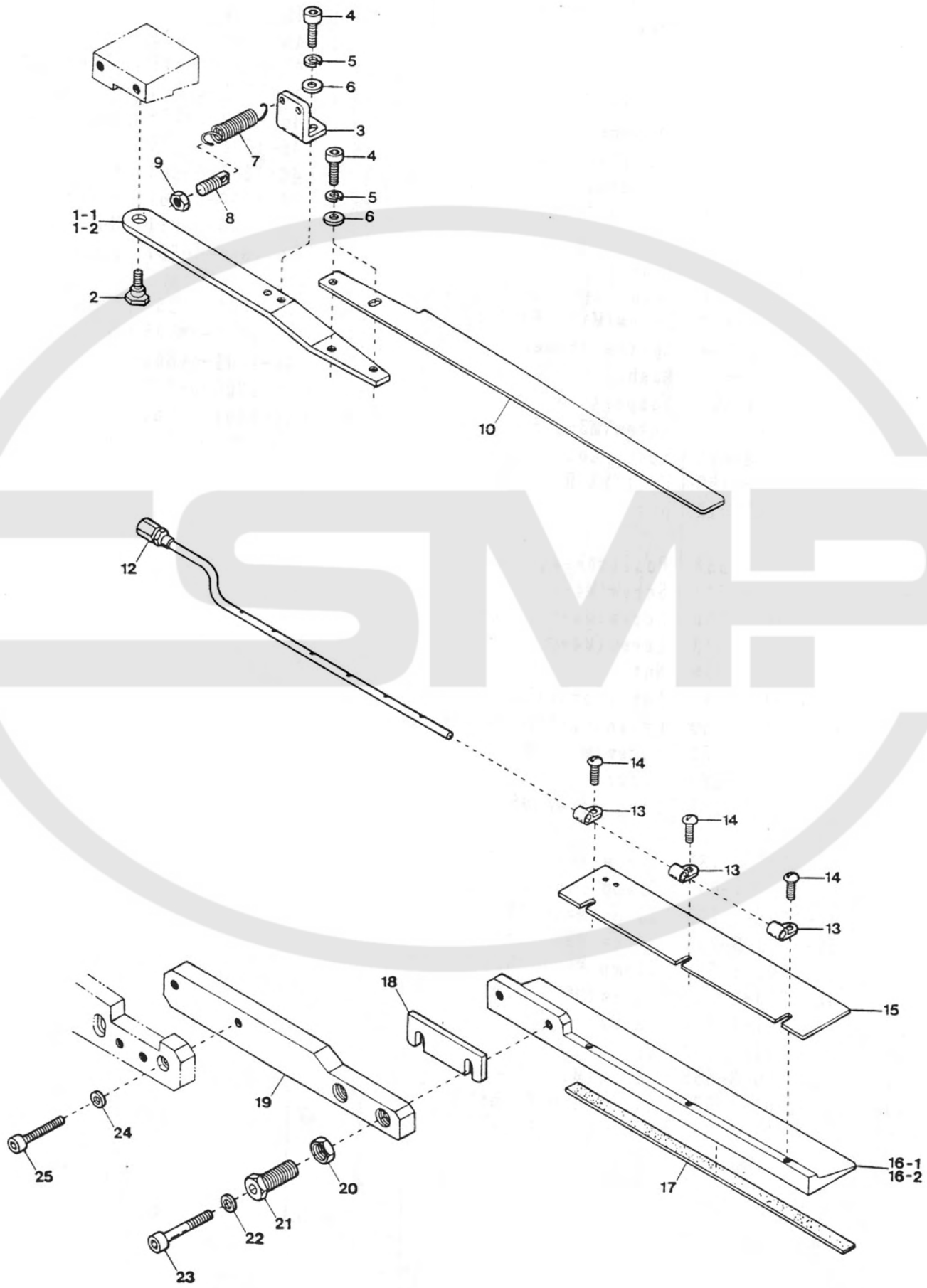
4
5
6
3
7
4
9
5
8
6
1-1
1-2
2
10
12
14
13
14
13
14
13
15
18
19
24
25
20
21
22
23
16-1
16-2
17

Det. No	Parts. No	Description
1-1	46-1001-4-620	Arm(Left)
1-2	46-1001-4-621	〃 (Right)
2	46-1000-6-188	Screw(M6-1×8)
3	46-1125-5-004	Bracket
4	46-1000-9-746	Screw(M4-0.7×8)
5	46-1000-0-644	Spring Washer
6	46-1000-0-665	Washer
7	46-1001-4-653	Return Spring
8	46-1000-6-638	Screw(5/32-40×9.5)
9	46-1000-0-339	Nut
10	46-1001-4-023	Brush Blade
11	・・・・・・・・	・・・・・・・・・・・・
12	46-1001-4-601	Air Nozzle
13	46-1001-4-647	Clamp
14	46-1000-6-233	Screw(M3-0.5×5)
15	46-1001-4-612	Cover Plate (10,12,14mm)
16-1	46-1001-4-628	Clamp Foot(Right)
16-2	46-1001-4-629	〃 (Left)
17-1	46-1001-4-589	Clamp Foot Rubber (3.5mm)
17-2	48-1125-5-960	〃 (6.0mm)(Extra)
17-3	48-1125-5-961	〃 (2.0mm)(Extra)
18	――――――	Spacer(See Page 30)
19	46-1001-4-618	Connecting Arm
20	46-1000-6-185	Nut
21	48-1019-0-042	Screw(M12-1×23)
22	46-1000-0-663	Washer
23	46-1000-9-755	Screw(M6-1×45)
24	46-1000-0-399	Washer
25	46-1000-9-976	Screw(M6-1×15)

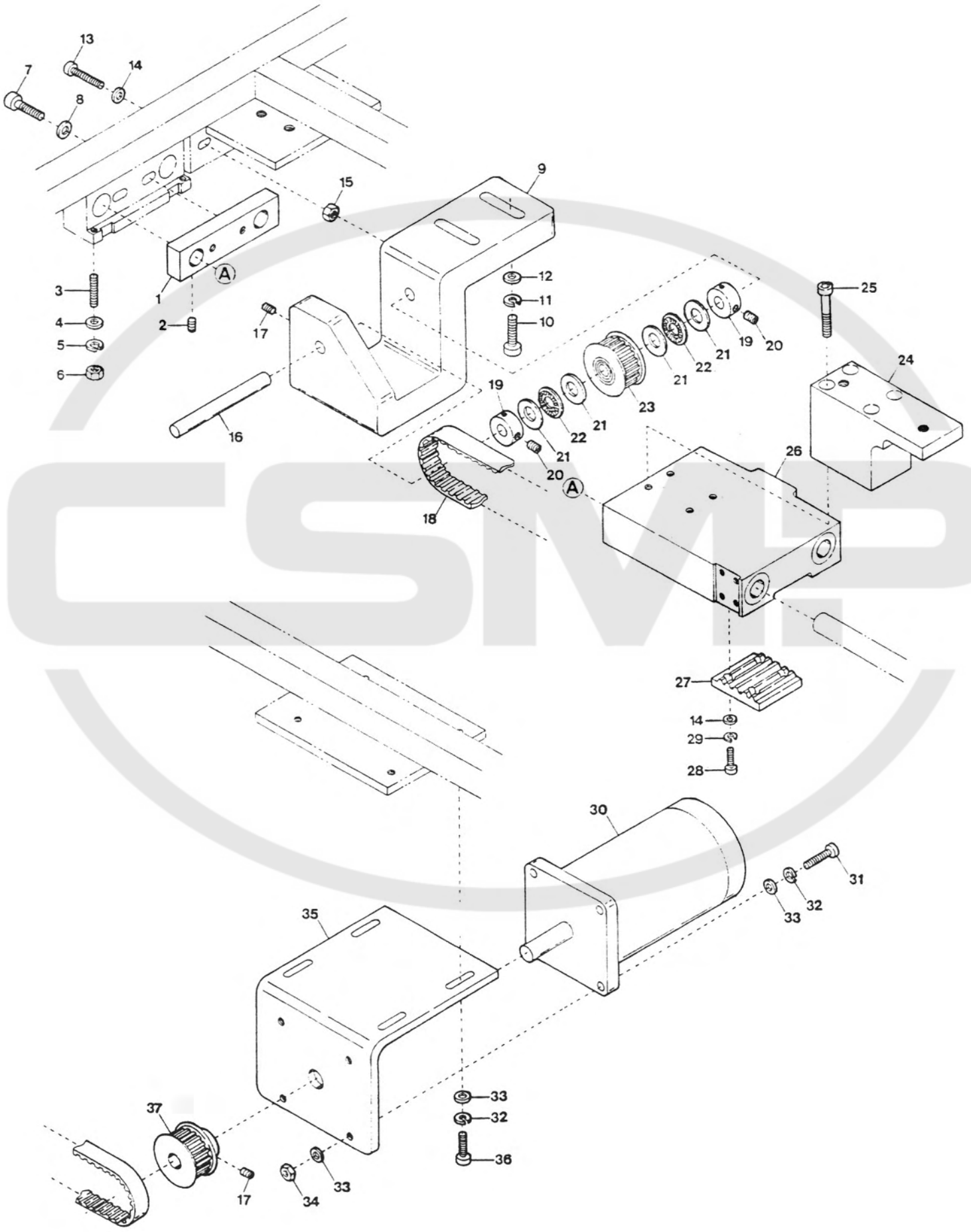
13
14
7
8
9
15
3
1
A
12
11
10
25
4
2
17
5
6
19
20
21
22
21
24
19
23
21
22
16
21
20
A
26
18
27
14
29
28
30
31
32
33
35
33
32
36
37
17
34
33

Det. No	Parts. No	Description
1	46-1001-4-101	Holder
2	46-1000-3-662	Screw(M6-1×6)
3	46-1000-9-738	Screw(M5-0.8×30)
4	46-1000-0-669	Washer
5	46-1000-0-600	Spring Washer
6	46-1000-0-009	Nut
7	46-1000-6-220	Screw(M8-1.25×40)
8	46-1000-0-429	Washer
9	48-1125-5-419	Sub-Pulley Holder
10	46-1000-9-761	Screw(M10-1.5×55)
11	46-1000-0-439	Spring Washer
12	46-1000-0-432	Washer
13	46-1000-9-755	Screw(M6-1×45)
14	46-1000-0-663	Washer
15	46-1000-0-011	Nut
16	48-1125-5-416	Sub-Pulley Shaft
17	46-1000-9-740	Screw(M6-1×10)
18	48-1125-5-412	Carriage Belt
19	46-1007-7-286	Collar
20	46-1000-3-635	Screw(1/4-40×6)
21	46-1001-4-572	Spacer
22	46-1001-4-571	Thrust Bearing
23	48-1125-5-413	Sub-Pulley
24	38-1125-6-114	Block
25	46-1000-9-759	Screw(M8-1.25×55)
26	48-1125-5-422	Slide Unit
27	48-1125-5-415	Belt Clamp
28	46-1000-9-754	Screw(M6-1×35)
29	46-1000-0-667	Spring Washer
30	48-1106-4-024	Drive Motor
31	46-1000-9-940	Screw(M8-1.25×35)
32	46-1000-0-676	Spring Washer
33	46-1000-0-666	Washer
34	46-1000-0-016	Nut
35	48-1125-5-410	Motor Bracket
36	46-1000-9-758	Screw(M8-1.25×30)
37	48-1125-5-411	Main Pulley

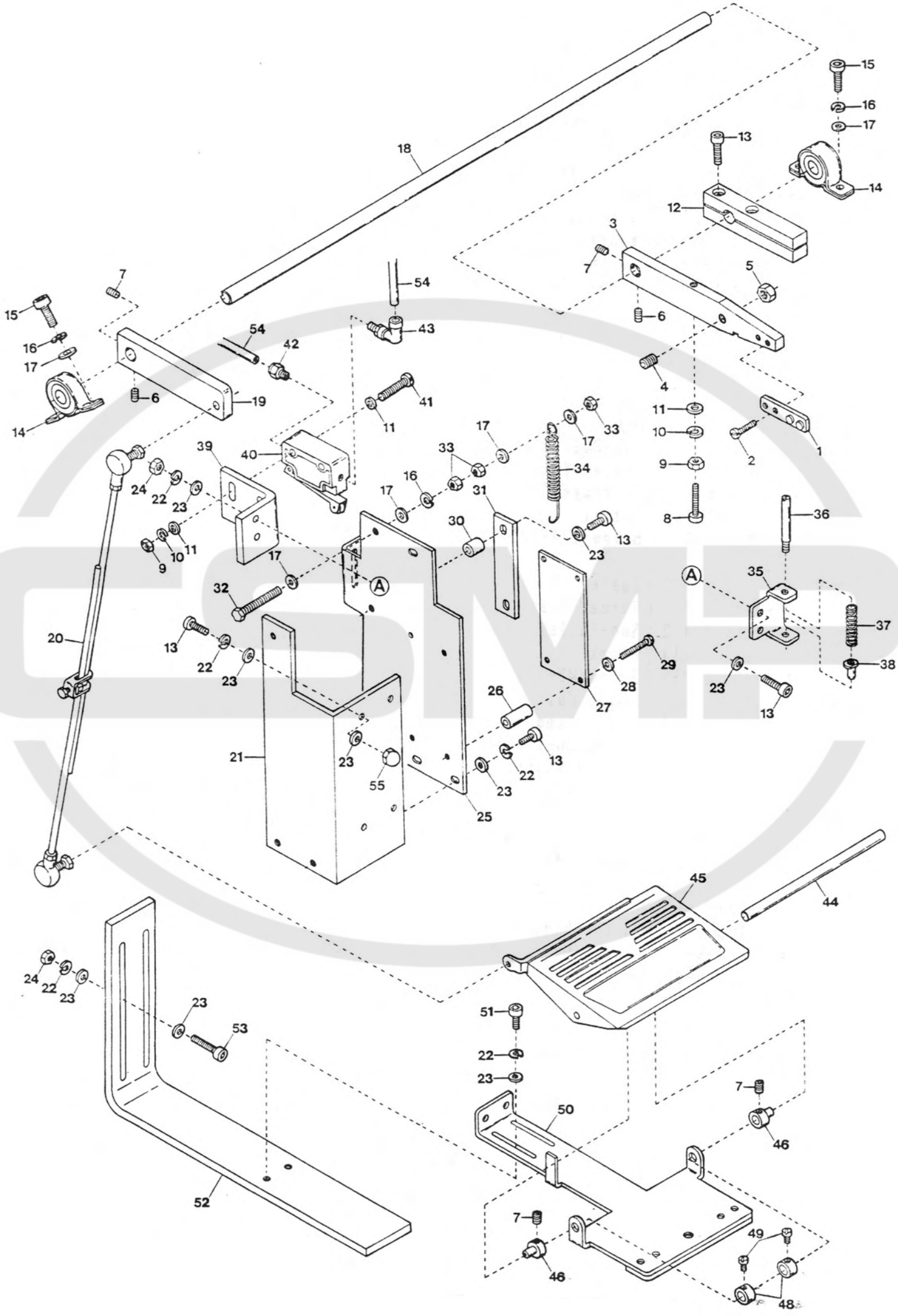
15
16
17
13
14
12
18
3
7
5
6
54
43
42
4
41
11
10
9
8
2
1
33
34
39
40
24
22
23
31
30
36
35
37
38
32
20
29
28
27
26
21
55
25
45
44
51
50
46
52
53
49
48
A

Det. No	Parts. No	Description
1	46-1001-4-767	Magnet Unit
2	46-1000-9-956	Screw(M3-0.5×10)
3	46-1001-4-763	Magnet Holder
4	46-1001-4-725	Spring Plunger
5	46-1000-0-054	Nut
6	46-1000-6-206	Screw(M5-0.8×8)
7	46-1000-6-212	Screw(M5-0.8×6)
8	46-1000-9-914	Screw(M4-0.7×40)
9	46-1000-0-015	Nut
10	46-1000-0-644	Spring Washer
11	46-1000-0-665	Washer
12	46-1001-4-918	Stop(Lower)
13	46-1000-9-970	Screw(M6-1×20)
14	46-1001-4-758	Shaft Bearing
15	46-1000-9-936	Screw(M8-1.25×20)
16	46-1000-0-676	Spring Washer
17	46-1000-0-666	Washer
18	46-1001-4-769	Shaft(Upper)
19	46-1001-4-919	Lever
20	46-1001-4-722	Pitman Unit
21	46-1001-4-921	Angle Plate
22	46-1000-0-667	Spring Washer
23	46-1000-0-663	Washer
24	46-1000-0-011	Nut
25	46-1001-4-920	Plate
26	46-1001-0-914	Spacer
27	46-1001-4-903	Treadle Switch Unit
28	46-1000-0-014	Washer
29	46-1000-9-957	Screw(M3-0.5×16)
30	46-1001-4-917	Spacer
31	46-1001-4-723	Plate
32	46-1000-9-978	Screw(M8-1.25×50)
33	46-1000-0-016	Nut
34	46-1001-4-757	Spring
35	46-1001-4-759	Stop Spring Bracket
36	46-1001-4-756	Stop Pin
37	46-1001-4-760	Stop Spring
38	46-1001-4-761	Stop(Upper)
39	48-1125-5-821	Limit Valve Support
40	48-1109-0-089	Limit Valve

Det. No	Parts. No	Description
41	38-1000-9-884	Screw(M4-0.7×30)
42	46-1001-0-055	Connector(φ4-1/8)
43	46-1001-0-057	Elbow Connector (φ4-1/8)
44	46-1125-5-130	Shaft(Lower)
45	38-1125-5-092	Treadle
46	46-1125-5-324	Shaft Collar
47	・・・・・・・	・・・・・・・・・・
48	46-1003-2-719	Collar
49	46-1000-4-351	Screw(9/64-40×7)
50	46-1001-4-753	Treadle Support
51	46-1000-9-976	Screw(M6-1×15)
52	46-1001-5-226	Plate
53	46-1000-6-201	Screw(M6-1×50)
54 *	46-1001-0-260	Air Tubing(4×2.5mm)
55	46-1000-0-063	Cap Nut

* Specify Length.

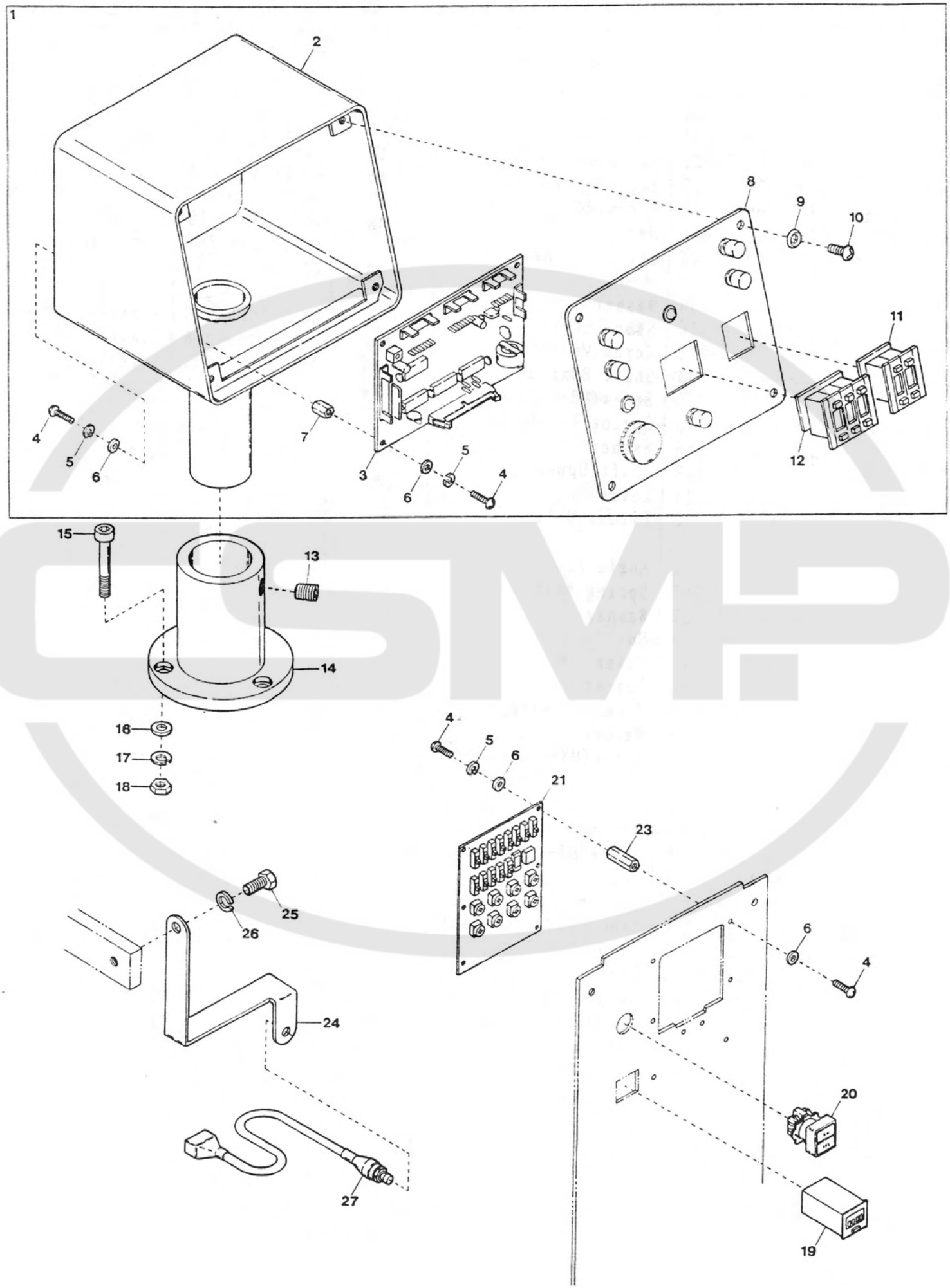
1
2
3
4
5
6
7
8
9
10
11
12
13
14
15
16
17
18
19
20
21
23
24
25
26
27

Det. No	Parts. No	Description
1	38-1124-9-062	Control Box, C. (English)
2	38-1125-5-920	Control Box
3	38-1105-7-054	Interface Board
4	46-1000-9-994	Screw(M3-0.5×8)
5	46-1000-0-002	Spring Washer
6	46-1000-0-014	Washer
7	38-1107-0-058	Spacer(Short)
8	38-1125-6-199	Control Panel (English)
9	46-1000-0-670	Washer
10	46-1000-9-774	Screw(M4-0.7×9.7)
11	38-1105-7-008	Counter(Double digit)
12	38-1105-7-017	Counter(Three digit)
13	38-1016-0-020	Screw(M10-1.5×10)
14	38-1125-5-923	Control Box Holder
15	46-1000-9-755	Screw(M6-1×45)
16	46-1000-0-663	Washer
17	46-1000-0-667	Spring Washer
18	46-1000-0-011	Nut
19	38-1106-9-005	Integrating Counter
20	48-1106-6-011	Power Source Switch
21	38-1105-7-063	Front Switch Board
22	・・・・・・・・	・・・・・・・・・・・・
23	38-1107-0-057	Spacer(Long)
24	46-1001-4-564	Start Switch Support
25	46-1000-9-777	Screw(M8-1.25×14)
26	46-1000-0-676	Spring Washer
27	38-1106-6-067	Manual Start Switch

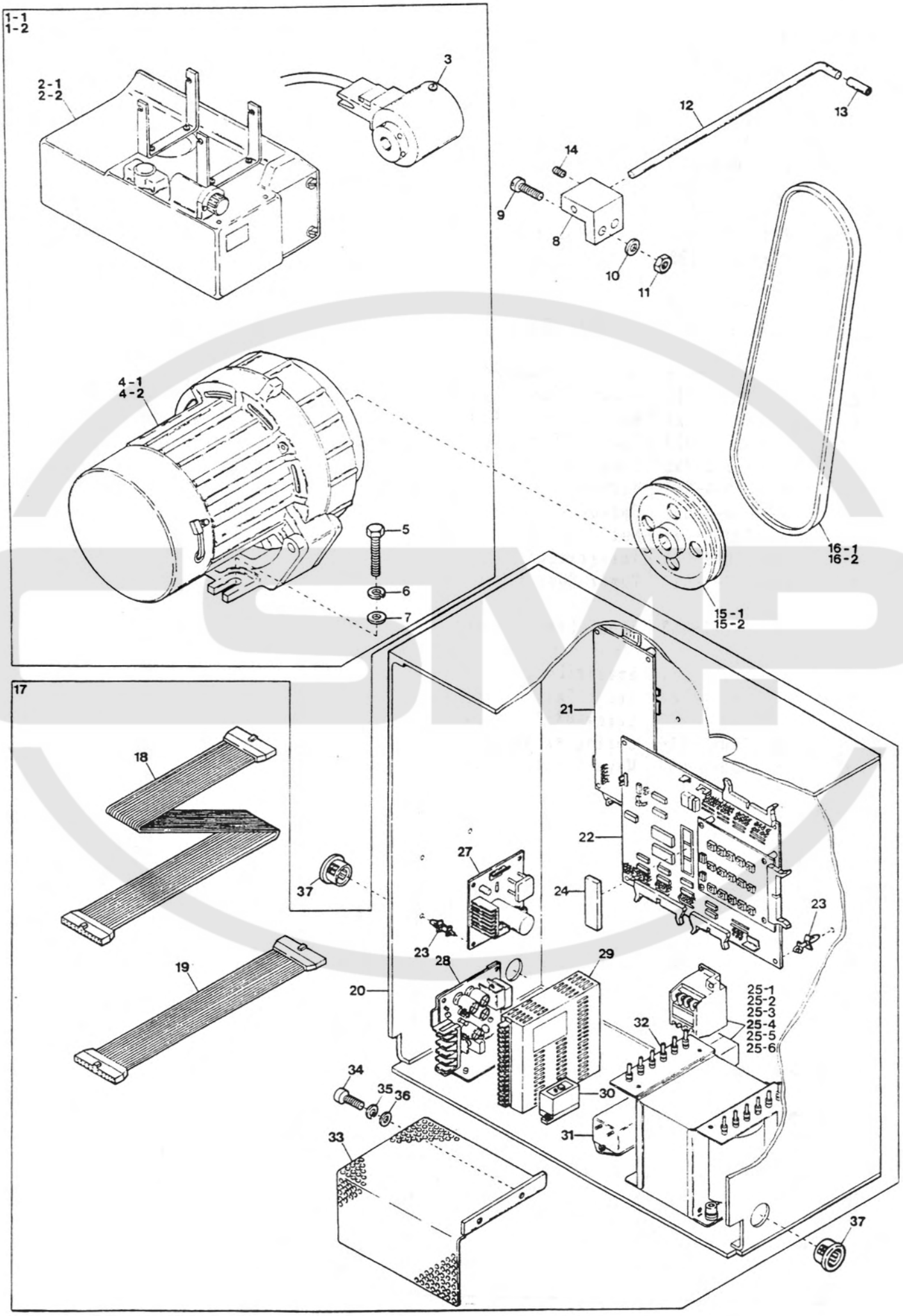
1-1
1-2
2-1
2-2
3
4-1
4-2
5
6
7
8
9
10
11
12
13
14
15-1
15-2
16-1
16-2
17
18
19
20
21
22
23
24
25-1
25-2
25-3
25-4
25-5
25-6
27
28
29
30
31
32
33
34
35
36
37

Det. No	Parts. No	Description
1-1	46-1001-0-900	Motor Unit(3 Phase 200,220,380,440V)
1-2	46-1001-0-978	Motor Unit(Single Phase 220V)
2-1	46-1001-0-957	Motor Control (3 Phase)
2-2	46-1001-0-977	〃 (Single Phase)
3	46-1001-0-956	Synchronizer
4-1	46-1001-0-955	Motor(3 Phase)
4-2	46-1001-0-976	〃 (Single Phase)
5	46-1000-9-928	Screw(M10-1.5×30)
6	46-1000-0-439	Spring Washer
7	46-1000-0-432	Washer
8	46-1001-4-418	Pin Holder
9	46-1000-4-445	Screw(11/64-40×11)
10	46-1000-0-530	Washer
11	46-1000-0-334	Nut
12	46-1001-4-421	Positioning Pin
13	46-1002-2-837	Synchronizer Cushion
14	46-1000-9-736	Screw(M4-0.7×6)
15-1	46-1001-4-797	Motor Pulley(100mm)
15-2	46-1001-4-798	〃 (120mm)
16-1	46-1001-0-987	V-Belt(M52 inch)
16-2	46-1001-0-988	〃 (M53 inch)
17-1	38-1124-9-049	Power Source Box, C. (200V)
17-2	38-1124-9-050	〃 (220V)
17-3	38-1124-9-051	〃 (380V)
17-4	38-1124-9-052	〃 (440V)
18	48-1120-0-066	Cable(1)(50 lines)
19	48-1120-0-082	Cable(2)(50 lines)
20	48-1125-5-497	Power Source Box

Det. No	Parts. No	Description
21	38-1105-7-074	Intermediate Board
22	38-1105-7-051	Control Board
23	46-1001-0-954	Board Support
24	38-1105-0-055	Single Chip Micro Computer =086
25-1	46-1001-0-894	Motor Start Relay (3 Phase 200V)
25-2	46-1001-0-895	〃 (3 Phase 220V)
25-3	46-1001-0-896	〃 (3 Phase 380V)
25-4	46-1001-0-897	〃 (3 Phase 440V)
25-5	46-1001-0-913	〃 (Single Phase 100V)
25-6	46-1001-0-979	〃 (Single Phase 220V)
26	. . . . .	. . . . .
27	48-1105-7-016	Power Board
28	48-1106-1-000	Valtage Regulator (5V 3A)
29	48-1106-4-039	Stepping Motor Drive
30	46-1001-0-842	Circuit Protector
31	46-1001-0-846	Noise Filter
32	48-1106-0-003	Transformer
33	48-1125-5-498	Transformer Cover
34	46-1000-9-992	Screw(M4-0.7×10)
35	46-1000-0-644	Spring Washer
36	46-1000-0-665	Washer
37	48-1107-0-056	Bushing

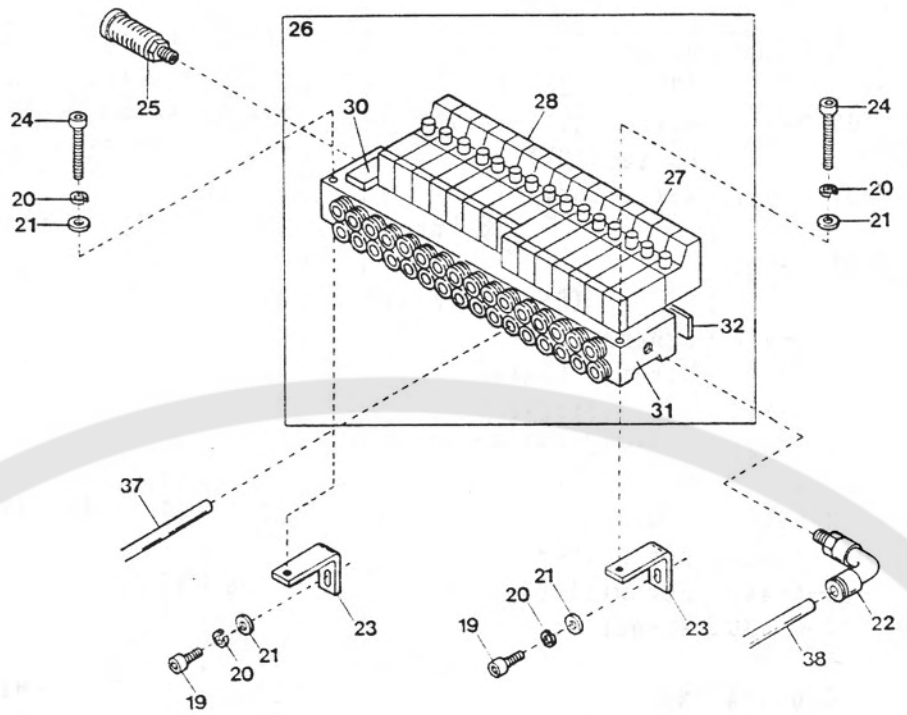
26
25
24
20
21
30
28
27
32
31
37
23
19
22
38

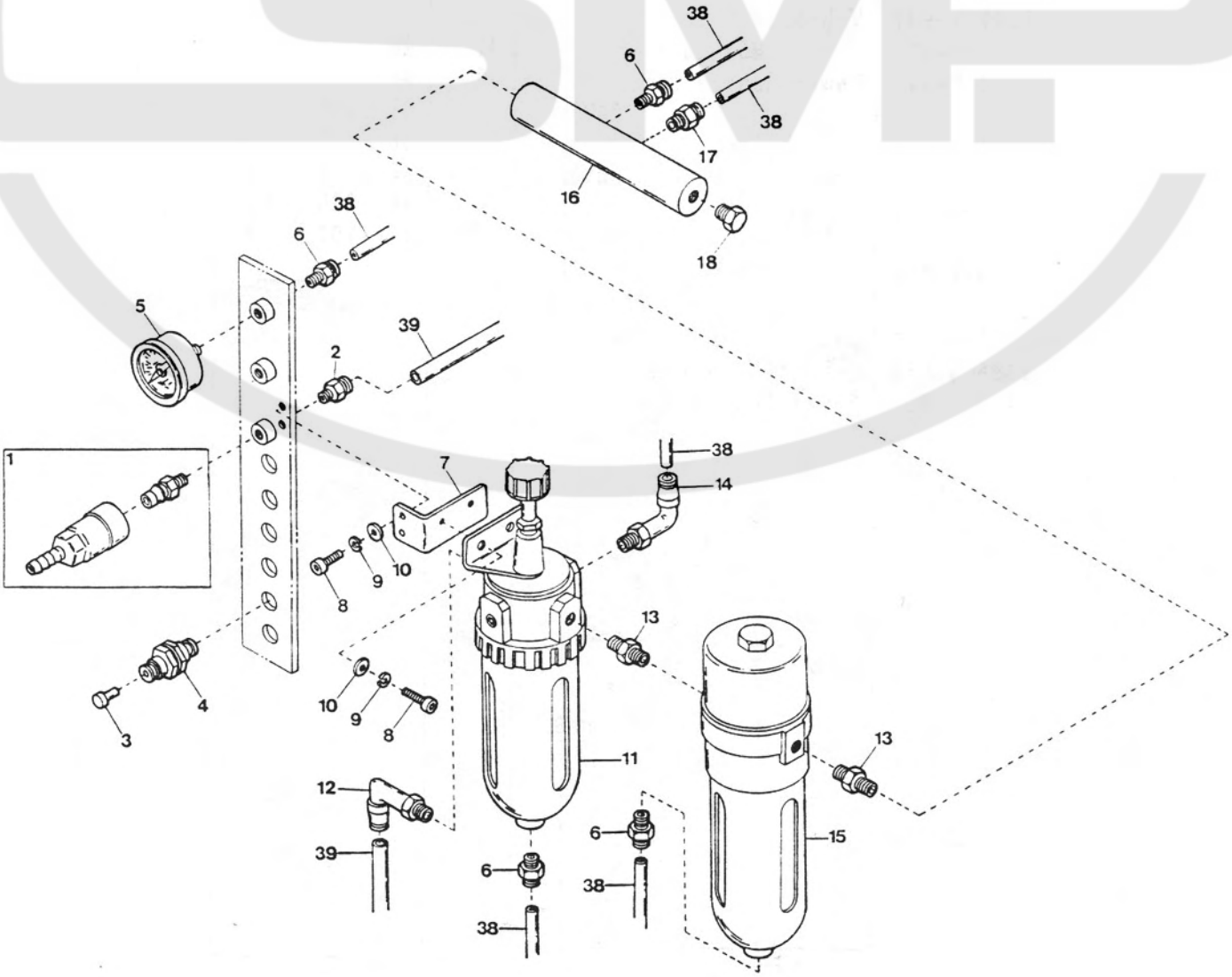
38
6
17
16
18
5
39
2
1
7
14
10
9
8
13
4
3
11
12
15

Det. No	Parts. No	Description
1	46-1001-0-227	Coupler
2	46-1001-0-265	Connector(φ8-1/4)
3	46-1001-0-278	Plug
4	46-1001-0-270	Connector(φ4)
5	46-1001-0-188	Pressure Gauge
6	46-1001-0-264	Connector(φ6-1/4)
7	46-1001-4-745	Regulator Support
8	46-1000-9-976	Screw(M6-1×15)
9	46-1000-0-667	Spring Washer
10	46-1000-0-663	Washer
11	46-1001-0-184	Regulator(AW211-02B)
12	46-1001-0-269	Elbow Connector (φ8-1/4)
13	46-1001-0-024	Nipple(1/4)
14	46-1001-0-267	Elbow Connector (φ6-1/4)
15	46-1001-0-239	Oil Mist Separator
16	46-1001-4-744	Air Distributor
17	46-1001-0-078	Connector(φ4-1/4)
18	46-1001-0-117	Seal Plug
19	46-1000-9-749	Screw(M4-0.7×16)
20	46-1000-0-644	Spring Washer
21	46-1000-0-665	Washer
22	48-1001-0-266	Elbow Connector (φ6-1/8)
23	48-1125-5-531	Valve Support
24	48-1012-0-027	Screw(M4-0.7×25)
25	46-1001-0-143	Silencer(MF6)
26	38-1109-0-091	Pneumatic Valve, C. (16 Valves)
27	48-1109-0-035	Pneumatic Valve (5 Port)
28	48-1109-0-042	Pneumatic Valve (3 Port)
29	. . . . .	. . . . .
30	48-1109-0-037	Blind Cover
31	38-1109-0-092	Manifold(16 Valves)
32	48-1039-0-031	Sticker
33	. . . . .	. . . . .
34	. . . . .	. . . . .
35	. . . . .	. . . . .
36	. . . . .	. . . . .
37 *	46-1001-0-260	Air Tubing(4×2.5mm)
38 *	46-1001-0-261	Air Tubing(6×4mm)
39 *	46-1001-0-262	Air Tubing(8×6mm)
		* Specify Length.

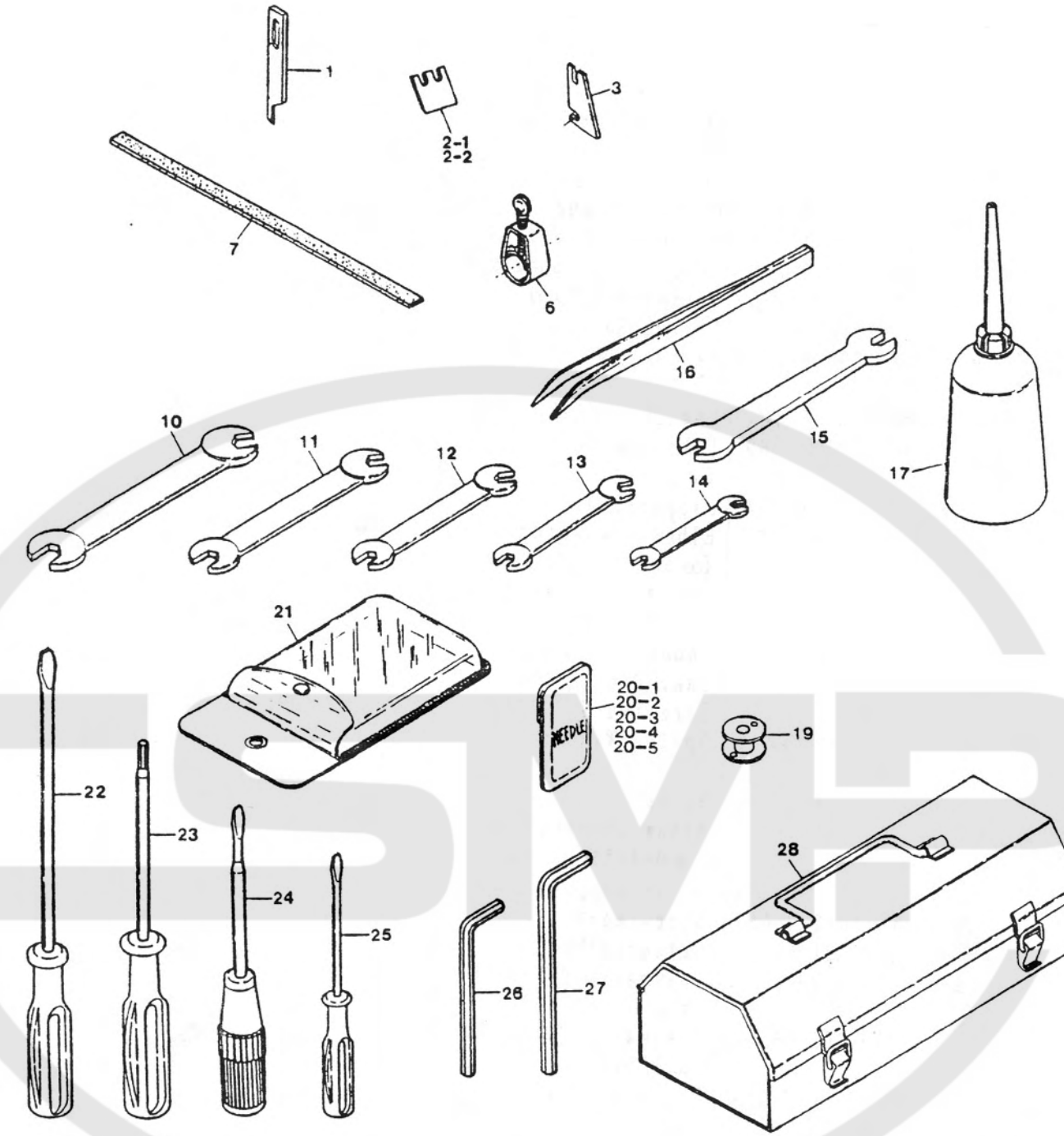
1
2-1
2-2
3
7
6
16
15
17
10
11
12
13
14
21
20-1
20-2
20-3
20-4
20-5
19
22
23
24
25
26
27
28

EXTRA PARTS

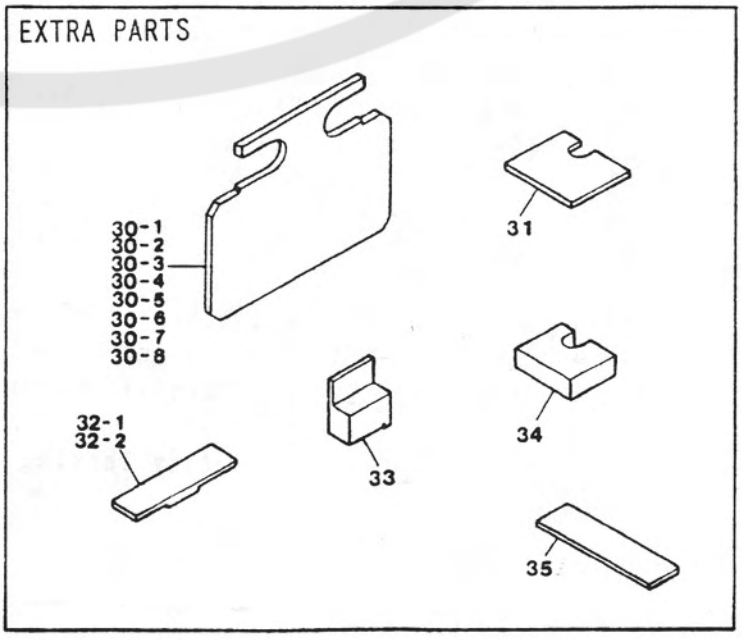
30-1
30-2
30-3
30-4
30-5
30-6
30-7
30-8
31
32-1
32-2
33
34
35

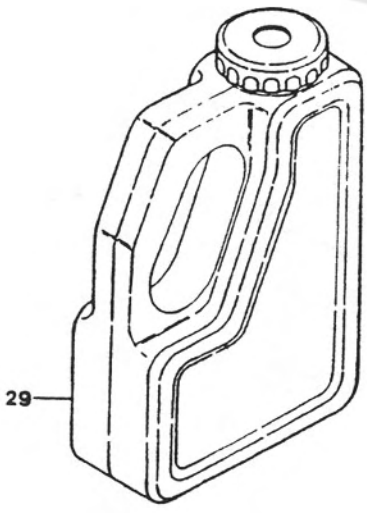
29

Det. No	Parts. No	Description
1	48-1125-5-721	Center Knife
2-1	46-1001-4-244	Trim Blade (for 10, 12, 14mm)
2-2	46-1001-5-292	〃 (for 16, 18, 20mm)
3	46-1001-4-136	Tab Knife
4	. . . . .	. . . . .
5	. . . . .	. . . . .
6	48-1003-3-939	Hose Band
7	46-1001-4-589	Clamp Foot Rubber
8	. . . . .	. . . . .
9	. . . . .	. . . . .
10	46-1009-9-140	Wrench(17×14mm)
11	46-1009-9-139	Wrench(13×11mm)
12	46-1009-9-138	Wrench(12×10mm)
13	46-1009-9-137	Wrench(8×7mm)
14	46-1009-9-136	Wrench(7×5.5mm)
15	46-1001-5-154	Wrench(8×9mm)
16	46-1009-9-051	Tweezers
17	46-1001-5-176	Oiler
18	. . . . .	. . . . .
19	46-1001-5-081	Bobbin
20-1	02-0150-0-110	Needle, rd. pt., Fine(0)
20-2	02-0150-0-111	Needle, rd. pt., Medium(1)
20-3	02-0150-0-112	Needle, rd. pt., Heavy(2)
20-4	02-0150-0-113	Needle, rd. pt., Very Heavy(3)
20-5	02-0150-0-114	Needle, rd. pt., Extra Heavy

Det. No	Parts. No	Description
21	46-1009-9-134	Wrench (8 pcs. par set)
22	46-1001-5-151	Screwdriver (5.5×190mm)
23	46-1003-7-919	Hexagonal Screwdriver (1.58mm 1/16inch)
24	46-1001-5-152	Screwdriver (3.4×70mm)
25	46-1001-5-153	Screwdriver (1.9×52mm)
26	46-1001-5-180	Wrench(2mm)
27	46-1001-5-179	Wrench(3mm)
28	46-1009-9-135	Accessory Box
29	46-1001-5-177	Oil Tank
30-1	46-1001-5-434	Clamp Arm Gauge (2.0mm)
30-2	46-1001-5-435	〃 (2.5mm)
30-3	46-1001-4-801	〃 (2.75mm)
30-4	46-1001-5-436	〃 (3.0mm)
30-5	46-1001-5-437	〃 (3.5mm)
30-6	46-1001-5-438	〃 (4.0mm)
30-7	46-1001-4-802	〃 (4.5mm)
30-8	46-1001-5-439	〃 (8.0mm)
31	46-1001-4-806	Needle & Hook Gauge
32-1	46-1001-4-803	Height Gauge(0.75mm)
32-2	46-1001-4-804	〃 (0.9mm)
33	46-1001-4-800	Needle Height Gauge
34	46-1001-4-805	Needle & Hook Gauge
35	46-1001-4-807	Fixed Knife Positioning Gauge (2.95mm)

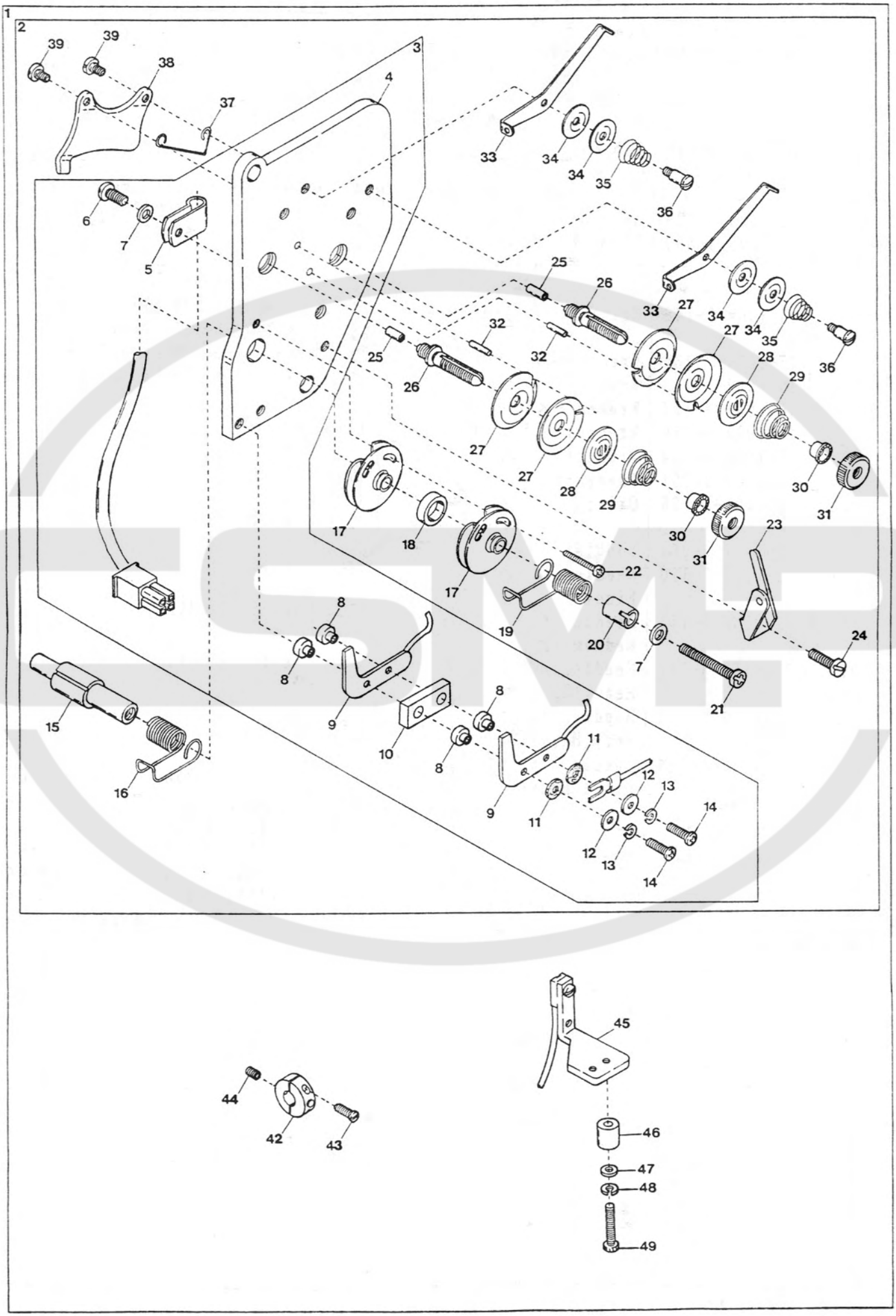
1
2
3
4
5
6
7
8
9
10
11
12
13
14
15
16
17
18
19
20
21
22
23
24
25
26
27
28
29
30
31
32
33
34
35
36
37
38
39
42
43
44
45
46
47
48
49

Det. No	Parts. No	Description
1	48-1125-5-626	Thread Monitor, C.
2	48-1125-5-578	Thread Tension, C.(2)
3	48-1125-5-577	Thread Tension, C.(1)
4	46-1001-5-414	Thread Tension Plate
5	46-1006-0-248	Cord Clamp(φ5.3-3N)
6	46-1000-4-127	Screw(M4-0.7×6)
7	46-1000-0-665	Washer
8	46-1001-4-979	Insulating Bushing
9	48-1125-6-040	Sensing Plate
10	46-1001-5-418	Spacer
11	46-1000-0-257	Washer
12	46-1000-0-014	Washer
13	46-1000-0-002	Spring Washer
14	46-1000-9-812	Screw(M3-0.5×20)
15	46-1001-5-415	Spring Guide Shaft
16	46-1001-5-424	Spring(Left)
17	46-1001-5-016	Spring Guide Assmbly
18	46-1001-5-416	Spacer
19	46-1001-5-423	Spring(Right)
20	46-1001-5-422	Spring Sleeve
21	46-1000-9-959	Screw(M4-0.7×20)
22	46-1000-9-811	Screw(M2.5-0.45×16)
23	46-1001-5-419	Thread Eyelet
24	46-1000-9-995	Screw(M3-0.5×5)
25	46-1001-5-425	Release Pin
26	46-1000-9-804	Tension Post
27	46-1008-0-232	Tension Disc
28	46-1008-0-705	Spring Washer
29	46-1008-5-276	Tension Spring(Thick)
30	46-1002-0-126	Tension Spring Bushing
31	46-1000-0-182	Adjusting Nut
32	46-1000-0-039	Stop Pin
33	46-1009-3-535	Thread Guide
34	46-1003-7-108	Tension Disc
35	46-1009-3-514	Tension Spring(Thin)
36	46-1000-1-092	Screw(1/8-44×3)
37	46-1001-5-015	Release Spring
38	46-1001-5-014	Release Plate
39	46-1000-8-224	Stud Screw(3.57)
40	・・・・・・・・	・・・・・・・・・・・・

Det. No	Parts. No	Description
41	・・・・・・・・	・・・・・・・・・・・・
42	46-1001-5-427	Magnet Ring Unit
43	46-1000-7-609	Screw(9/64-40×9)
44	46-1000-9-209	Screw(11/64-40×9)
45	48-1120-0-073	Position Detector Unit
46	46-1125-5-164	Spacer
47	46-1000-0-538	Washer
48	46-1000-0-644	Spring Washer
49	48-1012-0-027	Screw(M4-0.7×25)

26

TROUSER PANEL STACKER

1

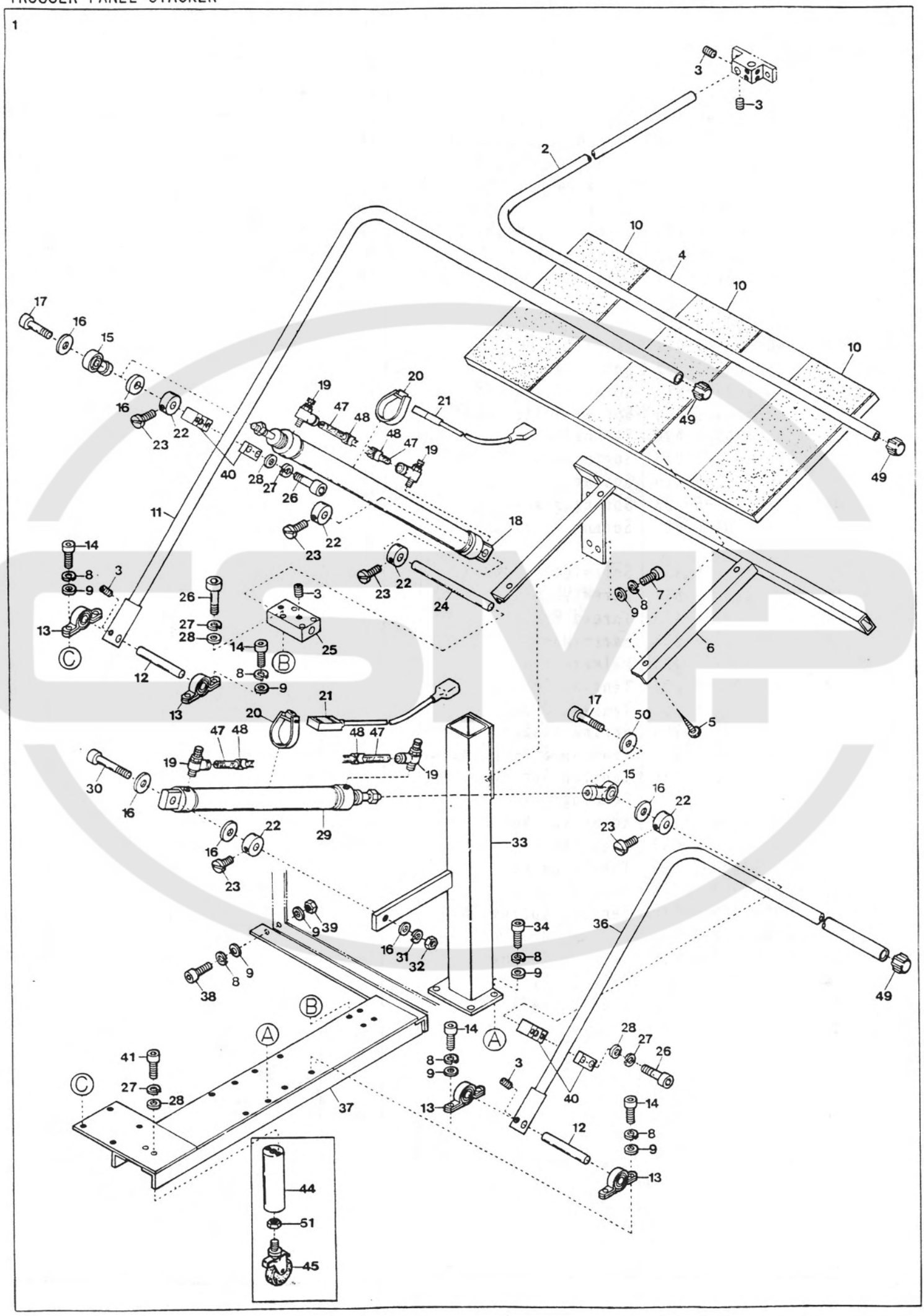

Det. No	Parts. No	Description
1	48-1125-5-984	Stacker, C.
2	46-1001-4-887	Guard
3	46-1000-3-662	Screw(M6-1×6)
4	46-1001-4-885	Table
5	46-1000-6-905	Wood Screw(φ5.1×20)
6	46-1001-4-889	Table Holder
7	46-1000-9-936	Screw(M8-1.25×20)
8	46-1000-0-676	Spring Washer
9	46-1000-0-666	Washer
10	46-1125-5-703	Rubber
11	46-1001-4-946	Arm
12	46-1001-4-884	Shaft
13	46-1001-4-758	Shaft Bearing
14	46-1000-9-936	Screw(M8-1.25×20)
15	46-1001-4-401	Rod End
16	46-1000-0-432	Washer
17	46-1000-9-760	Screw(M10-1.5×35)
18	46-1109-1-077	Cylinder (REMD-SD-32×250)
19	46-1001-0-254	Speed Control
20	46-1109-8-007	Band
21	48-1106-6-013	Sensing Switch
22	46-1003-2-719	Collar
23	46-1000-4-351	Screw(9/64-40×7)
24	46-1001-4-883	Cylinder Shaft
25	46-1001-4-881	Shaft Holder
26	46-1000-9-753	Screw(M6-1×30)
27	46-1000-0-667	Spring Washer
28	46-1000-0-663	Washer
29	46-1109-1-078	Cylinder (REMD-SD-32×100)
30	46-1000-9-761	Screw(M10-1.5×55)
31	46-1000-0-439	Spring Washer
32	46-1000-0-260	Nut
33	46-1001-4-891	Stacker Support
34	46-1000-9-758	Screw(M8-1.25×30)
35	・・・・・・・・	・・・・・・・・・・・・
36	46-1001-4-944	Cloth Arm
37	46-1001-4-890	Stacker Base
38	46-1000-9-759	Screw(M8-1.25×55)
39	46-1000-0-016	Nut
40	46-1001-4-942	Cylinder Holder

Det. No	Parts. No	Description
41	46-1000-9-970	Screw(M6-1×20)
42	・・・・・・・・	・・・・・・・・・・・・
43	・・・・・・・・	・・・・・・・・・・・・
44	46-1001-4-734	Holder(97mm)
45	46-1001-5-235	Caster
46	・・・・・・・・	・・・・・・・・・・・・
47 *	46-1001-0-260	Air Tubing(4×2.5mm)
48-1	46-1001-1-095	Marker(1)
48-2	46-1001-1-096	〃 (2)
48-3	46-1001-1-097	〃 (3)
48-4	46-1001-1-098	〃 (4)
49	46-1001-4-580	Pipe Cap
50	46-1000-0-425	Washer
51	46-1000-0-421	Nut

* Specify Length.

WORK REMOVER

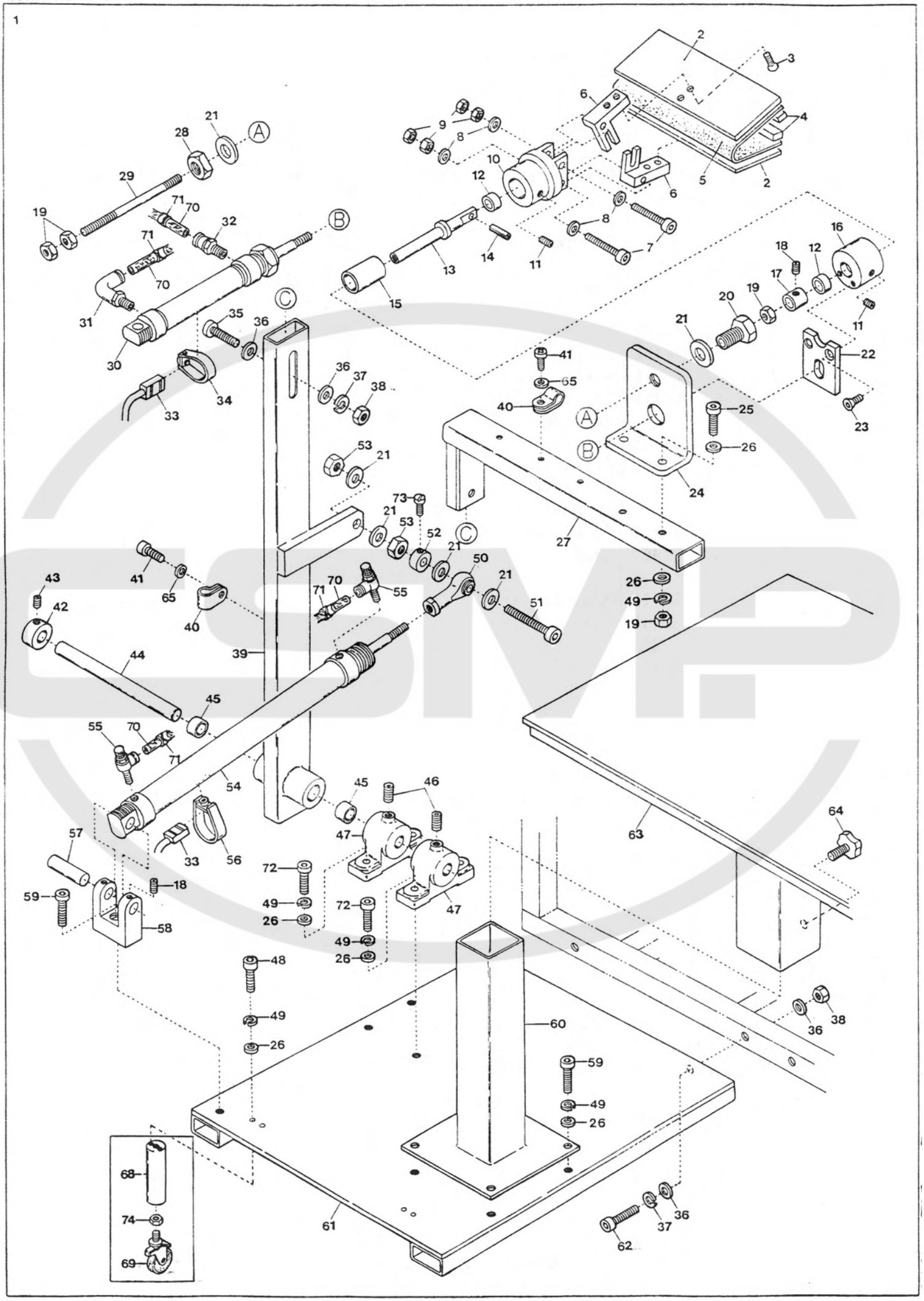

Det. No	Parts. No	Description
1	48-1125-5-898	Work Remover, C.
2	46-1001-4-858	Cloth Clamp Plate
3	46-1000-9-776	Screw(M4-0.7×10)
4	46-1001-4-928	Rubber
5	46-1001-4-929	Clamp Plate Rubber
6	46-1001-4-856	Clamp Plate Bracket
7	46-1000-9-800	Screw(M3-0.5×30)
8	46-1000-0-014	Washer
9	46-1000-0-012	Nut
10	46-1001-4-874	Shaft Holder(Front)
11	46-1000-3-662	Screw(M6-1×6)
12	46-1001-4-867	Bushing
13	46-1001-4-863	Shaft
14	46-1000-0-037	Pin
15	46-1001-4-866	Bushing
16	46-1001-4-865	Shaft Holder(Rear)
17	46-1001-4-869	Collar
18	46-1016-0-001	Screw(M4-0.7×4)
19	46-1000-0-011	Nut
20	46-1000-6-199	Screw(M10-1.5×20)
21	46-1000-0-432	Washer
22	46-1001-4-870	Cylinder Guide Plate
23	46-1000-9-775	Screw(M3-0.5×10)
24	46-1001-4-864	Cylinder Support
25	46-1000-9-754	Screw(M6-1×35)
26	46-1000-0-663	Washer
27	46-1001-4-876	Arm(Upper)
28	46-1000-0-054	Nut
29	46-1001-4-868	Connecting Shaft
30	46-1001-0-296	Cylinder (REMD-SD-20×70)
31	46-1001-0-057	Elbow Connector (φ4-1/8)
32	46-1001-0-055	Connector(φ4-1/8)
33	48-1106-6-013	Sensing Switch
34	46-1001-0-301	Band
35	46-1000-9-758	Screw(M8-1.25×30)
36	46-1000-0-666	Washer
37	46-1000-0-676	Spring Washer
38	46-1000-0-016	Nut
39	46-1001-4-877	Arm(Lower)
40	46-1003-6-133	Cord Clamp(φ8.4-5N)

Det. No	Parts. No	Description
41	46-1000-9-974	Screw(M4-0.7×10)
42	46-1001-4-356	Collar
43	46-1000-6-212	Screw(M5-0.8×6)
44	46-1001-4-871	Shaft
45	46-1001-4-654	Bushing
46	46-1000-3-655	Screw(M4-0.7×10)
47	46-1001-4-861	Shaft Bearing
48	46-1000-9-970	Screw(M6-1×20)
49	46-1000-0-667	Spring Washer
50	46-1001-4-401	Rod End
51	46-1000-9-761	Screw(M10-1.5×55)
52	46-1003-2-719	Collar
53	46-1000-0-260	Nut
54	46-1109-1-079	Cylinder (REMD-SD-32×150)
55	46-1001-0-254	Speed Control
56	46-1109-8-007	Band
57	46-1001-4-872	Cylinder Pin
58	46-1001-4-850	Cylinder Holder
59	46-1000-9-976	Screw(M6-1×15)
60	46-1001-4-873	Table Support
61	46-1001-4-878	Remover Base
62	46-1000-9-759	Screw(M8-1.25×55)
63	46-1001-4-875	Table
64	46-1001-4-914	Knob
65	46-1000-0-665	Washer
66	・・・・・・・・	・・・・・・・・・・・・
67	・・・・・・・・	・・・・・・・・・・・・
68	46-1001-4-734	Holder(97mm)
69	46-1001-5-235	Caster
70 *	46-1001-0-260	Air Tubing(4×2.5mm)
71-1	46-1001-1-095	Marker(1)
71-2	46-1001-1-096	〃 (2)
71-3	46-1001-1-097	〃 (3)
71-4	46-1001-1-098	〃 (4)
72	46-1000-9-977	Screw(M6-1×25)
73	46-1000-4-351	Screw(9/64-40×7)
74	46-1000-0-421	Nut

* Specify Length

TROUSER AIR EJECTOR

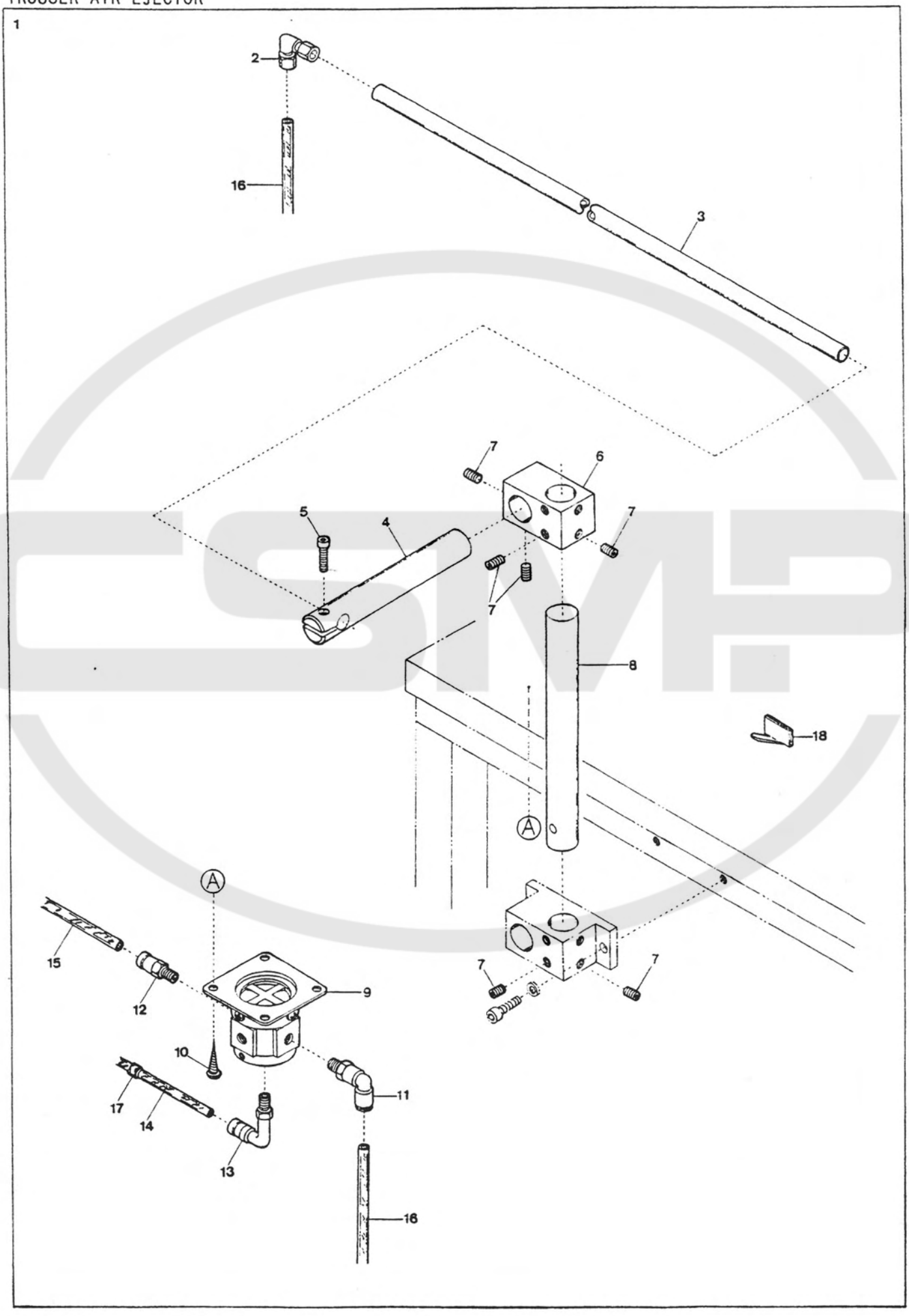

TROUSER AIR EJECTOR

Det. No	Parts. No	Description
1	46-1001-4-947	Panel Air Ejector, Complete
2	46-1001-0-313	Elbow Connector
3	46-1001-4-935	Air Nozzle
4	46-1001-4-938	Air Nozzle Support
5	46-1000-9-976	Screw(M6-1×15)
6	46-1001-4-936	Block
7	46-1000-3-662	Screw(M6-1×6)
8	46-1001-4-937	Positioning Shaft
9	46-1001-0-148	Pilot Valve
10	46-1000-6-905	Wood Screw(φ5.1-20)
11	46-1001-0-269	Elbow Connector (φ8-1/4)
12	46-1001-0-264	Connector(φ6-1/4)
13	46-1001-0-057	Elbow Connector (φ4-1/8)
14 *	46-1001-0-260	Air Tubing(4×2.5mm)
15 *	46-1001-0-261	Air Tubing(6×4mm)
16 *	46-1001-0-262	Air Tubing(8×6mm)
17	46-1001-1-095	Marked(1)
18	46-1003-5-767	Cord Stay
		* Specify Length.

LARGE BOBBIN

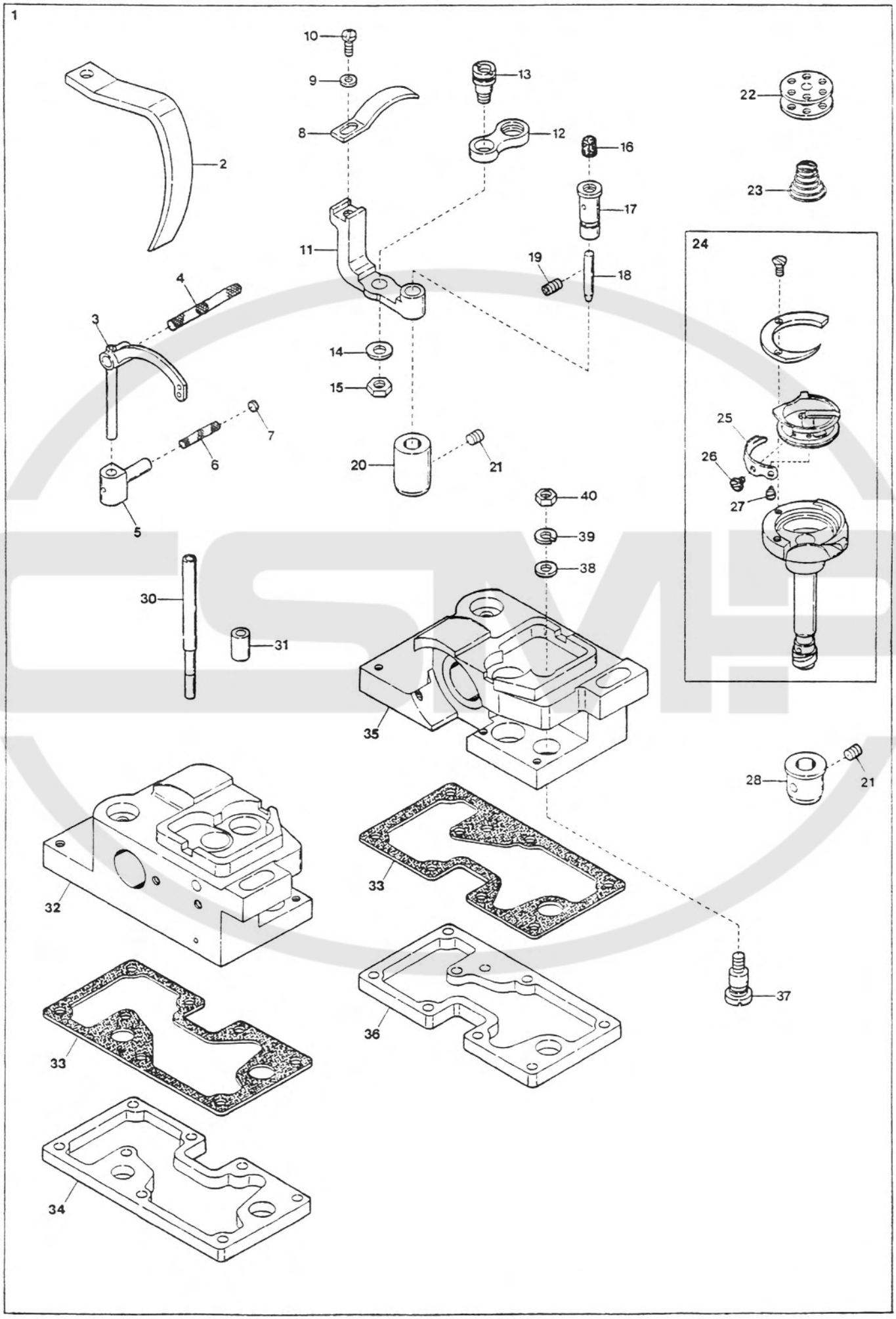

LARGE BOBBIN ASSOCIATE PARTS(EXTRA PARTS)

Det. No	Parts. No	Description
1	48-1125-5-986	Large Bobbin, C.
2	48-1900-0-031	Thread Take-up Cover
3	48-1900-0-037	Thread Take-up
4	46-1000-8-269	Wick
5	48-1900-0-038	Thread Take-up Lever Slide Block
6	46-1000-8-272	Wick
7	46-1001-5-030	Pusher
8	48-1900-0-064	Bobbin Case Opener
9	46-1000-8-207	Screw(3.57-40×8)
10	48-1093-0-001	Washer
11	48-1900-0-062	Opener Crank
12	48-1900-0-061	Opener Link
13	46-1001-5-071	Link Stud Opener
14	46-1000-8-258	Washer(4.76)
15	48-1093-0-000	Nut
16	46-1000-8-280	Felt
17	48-1900-0-063	Opener Crank Stud
18	46-1001-5-073	Pipe
19	46-1000-8-241	Screw(4.76)
20	48-1900-0-057	Rotary Hook Shaft Bushing(Lower)
21	46-1000-8-240	Screw(4.76)
22	48-1125-5-580	Bobbin
23	48-1900-0-094	Anti-Over-Run Spring
24	48-1125-5-987	Outer Rotary Hook Assembly
25	48-1900-0-060	Tension Adjusting Spring
26	46-1000-8-209	Tension Adjusting Screw
27	46-1000-8-210	Screw
28	48-1900-0-058	Rotary Hook Shaft Bushing(Upper)
29	. . . . .	. . . . .
30	48-1900-0-088	Oil Gauge
31	46-1001-5-086	Oil Pipe
32	48-1900-0-056	Rotary Hook Base (Left)
33	46-1001-5-083	Packing
34	46-1001-5-084	Oil Reservoir(Left)
35	48-1900-0-066	Rotary Hook Base (Right)
36	46-1001-5-088	Oil Reservoir(Right)
37	46-1000-8-226	Oil Adjusting Screw
38	46-1000-8-260	Washer
39	46-1000-8-264	Spring Washer
40	46-1000-8-255	Nut(4.37)

Series 38S CLASS LIST of MAIN SPARE PARTS

Spare Parts / Models	Needle Head	Throat Plate	Trimming Hanger	Movable Knife	Fixed Knife (Left)	Fixed Knife (Right)	Tab Knife Support Complete	Jumping Guide Shaft
S38S-C10-175S	48-1900-0-001	46-1001-4-426	46-1001-4-483	46-1001-4-503	46-1001-4-506	46-1001-4-505	48-1125-5-390	46-1001-4-521
C10-175D	〃	〃	〃	〃	〃	〃	〃	〃
C10-180S	〃	〃	〃	〃	〃	〃	〃	〃
C10-180D	〃	〃	〃	〃	〃	〃	〃	〃
C10-185S	〃	〃	〃	〃	〃	〃	〃	〃
C10-185D	〃	〃	〃	〃	〃	〃	〃	〃
C12-210S	48-1900-0-002	46-1001-4-427	〃	46-1001-4-504	46-1001-4-508	46-1001-4-507	48-1125-5-391	46-1001-4-522
C12-210D	〃	〃	〃	〃	〃	〃	〃	〃
C12-220S	〃	〃	〃	〃	〃	〃	〃	〃
C12-220D	〃	〃	〃	〃	〃	〃	〃	〃
C12-230S	〃	〃	〃	〃	〃	〃	〃	〃
C12-230D	〃	〃	〃	〃	〃	〃	〃	〃
C14-270S	48-1900-0-003	46-1001-4-489	〃	46-1001-5-201	46-1001-4-506	46-1001-4-505	48-1125-5-392	46-1001-5-200
C14-270D	〃	〃	〃	〃	〃	〃	〃	〃
C16-300S	48-1900-0-004	46-1001-5-254	46-1001-5-302	46-1001-5-299	〃	〃	48-1125-5-393	46-1001-5-296
C16-300D	〃	〃	〃	〃	〃	〃	〃	〃
C16-310S	〃	〃	〃	〃	〃	〃	〃	〃
C16-310D	〃	〃	〃	〃	〃	〃	〃	〃
C18-350S	48-1900-0-005	46-1001-5-255	〃	46-1001-5-300	〃	〃	48-1125-5-394	46-1001-5-297
C18-350D	〃	〃	〃	〃	〃	〃	〃	〃
C20-390S	48-1900-0-006	46-1001-5-256	46-1125-5-696	46-1001-5-301	〃	〃	48-1125-5-395	46-1001-5-298
C20-390D	〃	〃	〃	〃	〃	〃	〃	〃

Spare Parts / Models	Jumping Guide Block	Patch Guide Complete	Patch Guide (Upper)	Patch Guide (Lower)	Slide Plate (Left)	Slide Plate (Right)	Clamp Foot Spacer
S38S-C10-175S	46-1001-4-537	48-1125-5-803	48-1125-5-754	46-1001-5-371	48-1125-5-930	48-1125-5-931	46-1001-4-594(3.25)
C10-175D	〃	48-1125-5-804	48-1125-5-755	46-1001-5-364	〃	〃	〃 〃
C10-180S	〃	48-1125-5-957	48-1125-5-754	46-1001-5-405	〃	〃	46-1001-5-411(3.5)
C10-180D	〃	48-1125-5-958	48-1125-5-755	46-1001-5-406	〃	〃	〃 〃
C10-185S	〃	48-1125-5-805	48-1125-5-754	48-1125-5-752	〃	〃	48-1125-5-622(3.75)
C10-185D	〃	48-1125-5-806	48-1125-5-755	48-1125-5-753	〃	〃	〃 〃
C12-210S	46-1001-4-538	48-1125-5-785	48-1125-5-756	46-1001-5-372	〃	〃	46-1001-5-219(4.0)
C12-210D	〃	48-1125-5-783	48-1125-5-757	46-1001-5-365	〃	〃	〃 〃
C12-220S	〃	48-1125-5-807	48-1125-5-756	46-1001-5-373	〃	〃	46-1001-4-595(4.5)
C12-220D	〃	48-1125-5-808	48-1125-5-757	46-1001-5-366	〃	〃	〃 〃
C12-230S	〃	38-1125-6-158	48-1125-5-756	46-1001-5-374	〃	〃	46-1001-4-596(5.0)
C12-230D	〃	38-1125-6-157	48-1125-5-757	46-1001-5-367	〃	〃	〃 〃
C14-270S	46-1001-5-202	48-1125-5-809	48-1125-5-758	46-1001-5-376	〃	〃	46-1001-5-214(6.0)
C14-270D	〃	48-1125-5-810	48-1125-5-759	46-1001-5-369	〃	〃	〃 〃
C16-300S	46-1001-5-293	48-1125-5-811	48-1125-5-760	48-1125-5-512	48-1125-5-932	48-1125-5-933	46-1001-5-284(7.0)
C16-300D	〃	48-1125-5-812	48-1125-5-761	48-1125-5-511	〃	〃	〃 〃
C16-310S	〃	48-1125-5-813	48-1125-5-760	48-1125-5-570	〃	〃	〃 〃
C16-310D	〃	48-1125-5-814	48-1125-5-761	48-1125-5-571	〃	〃	〃 〃
C18-350S	46-1001-5-294	48-1125-5-815	48-1125-5-762	48-1125-5-572	48-1125-5-934	48-1125-5-935	46-1001-5-286(8.0)
C18-350D	〃	48-1125-5-816	48-1125-5-763	48-1125-5-573	〃	〃	〃 〃
C20-390S	46-1001-5-295	48-1125-5-817	48-1125-5-764	48-1125-5-574	48-1125-5-936	48-1125-5-937	46-1001-5-288(9.0)
C20-390D	〃	48-1125-5-818	48-1125-5-765	48-1125-5-575	〃	〃	〃 〃

Note : Numbers in ( ) of Clamp Foot Spacer shows its thickness.

INDEX

Parts No.	Page No.	Det. No.
02-0150-0-110	24	20-1
02-0150-0-111	24	20-2
02-0150-0-112	24	20-3
02-0150-0-113	24	20-4
02-0150-0-114	24	20-5
38-1000-9-884	20	41
38-1016-0-020	21	13
38-1039-0-075	12	68
38-1105-0-055	22	24
38-1105-7-008	21	11
38-1105-7-017	21	12
38-1105-7-051	22	22
38-1105-7-054	21	3
38-1105-7-063	21	21
38-1105-7-074	22	21
38-1106-6-067	21	27
38-1106-9-005	21	19
38-1107-0-057	21	23
38-1107-0-058	21	7
38-1109-0-091	23	26
38-1109-0-092	23	31
38-1109-1-038	14	30
38-1109-1-041	16	25
38-1124-9-049	22	17-1
38-1124-9-050	22	17-2
38-1124-9-051	22	17-3
38-1124-9-052	22	17-4
38-1124-9-062	21	1
38-1125-3-220	12	69
38-1125-5-078	12	23
38-1125-5-092	20	45
38-1125-5-920	21	2
38-1125-5-923	21	14
38-1125-5-938	12	14
38-1125-5-939	9	1
38-1125-5-941	12	67
38-1125-5-942	12	66
38-1125-6-113	13	26
38-1125-6-114	19	24
38-1125-6-177	9	53
38-1125-6-178	9	55
38-1125-6-199	21	8
38-1960-1-008	13	11
46-1000-0-002	9	31
46-1000-0-002	10	22
46-1000-0-002	12	30
46-1000-0-002	13	6
46-1000-0-002	16	22
46-1000-0-002	17	3
46-1000-0-002	21	5
46-1000-0-002	25	13
46-1000-0-009	9	45
46-1000-0-009	10	15
46-1000-0-009	12	50
46-1000-0-009	17	54
46-1000-0-009	19	6
46-1000-0-011	17	49
46-1000-0-011	19	15
46-1000-0-011	20	24
46-1000-0-011	21	18
46-1000-0-011	27	19
46-1000-0-012	9	43
46-1000-0-012	12	63
46-1000-0-012	13	7
46-1000-0-012	17	20
46-1000-0-012	27	9
46-1000-0-014	9	30
46-1000-0-014	10	33
46-1000-0-014	12	31
46-1000-0-014	13	5
46-1000-0-014	14	44
46-1000-0-014	16	23
46-1000-0-014	17	4
46-1000-0-014	20	28
46-1000-0-014	21	6
46-1000-0-014	25	12
46-1000-0-014	27	8
46-1000-0-015	8	18
46-1000-0-015	10	5
46-1000-0-015	12	10
46-1000-0-015	15	33
46-1000-0-015	16	61
46-1000-0-015	17	25
46-1000-0-015	20	9
46-1000-0-016	10	48
46-1000-0-016	12	57
46-1000-0-016	13	13
46-1000-0-016	14	34
46-1000-0-016	16	28
46-1000-0-016	19	34
46-1000-0-016	20	33
46-1000-0-016	26	39
46-1000-0-016	27	38
46-1000-0-035	15	38
46-1000-0-035	16	66
46-1000-0-037	27	14
46-1000-0-039	25	32
46-1000-0-054	20	5
46-1000-0-054	27	28
46-1000-0-063	9	52
46-1000-0-063	20	55
46-1000-0-065	12	15
46-1000-0-070	13	14
46-1000-0-182	25	31
46-1000-0-209	15	24
46-1000-0-209	16	52
46-1000-0-257	25	11
46-1000-0-260	9	5
46-1000-0-260	15	49
46-1000-0-260	26	32
46-1000-0-260	27	53
46-1000-0-332	13	46
46-1000-0-334	22	11
46-1000-0-335	12	70
46-1000-0-339	18	9
46-1000-0-399	17	56
46-1000-0-399	18	24
46-1000-0-419	14	62
46-1000-0-421	13	23
46-1000-0-421	26	51
46-1000-0-421	27	74
46-1000-0-425	26	50
46-1000-0-426	12	48
46-1000-0-428	16	4
46-1000-0-429	13	16
46-1000-0-429	19	8
46-1000-0-432	19	12
46-1000-0-432	22	7
46-1000-0-432	26	16
46-1000-0-432	27	21
46-1000-0-433	13	22
46-1000-0-439	9	6
46-1000-0-439	17	10
46-1000-0-439	19	11
46-1000-0-439	22	6

INDEX

Parts No.	Page No.	Det. No.
46-1000-0-439	26	31
46-1000-0-530	22	10
46-1000-0-538	8	6
46-1000-0-538	14	56
46-1000-0-538	25	47
46-1000-0-555	12	45
46-1000-0-600	10	14
46-1000-0-600	12	49
46-1000-0-600	14	3
46-1000-0-600	19	5
46-1000-0-612	9	7
46-1000-0-612	15	50
46-1000-0-612	17	11
46-1000-0-623	10	16
46-1000-0-623	12	40
46-1000-0-623	13	58
46-1000-0-623	14	6
46-1000-0-623	16	47
46-1000-0-623	17	29
46-1000-0-644	8	5
46-1000-0-644	9	3
46-1000-0-644	10	4
46-1000-0-644	12	17
46-1000-0-644	14	28
46-1000-0-644	15	8
46-1000-0-644	16	11
46-1000-0-644	17	14
46-1000-0-644	18	5
46-1000-0-644	20	10
46-1000-0-644	22	35
46-1000-0-644	23	20
46-1000-0-644	25	48
46-1000-0-663	8	14
46-1000-0-663	9	59
46-1000-0-663	10	37
46-1000-0-663	11	9
46-1000-0-663	12	7
46-1000-0-663	15	12
46-1000-0-663	16	31
46-1000-0-663	17	47
46-1000-0-663	18	22
46-1000-0-663	19	14
46-1000-0-663	20	23
46-1000-0-663	21	16
46-1000-0-663	23	10
46-1000-0-663	26	28
46-1000-0 663	27	26
46-1000-0-665	8	19
46-1000-0-665	9	4
46-1000-0-665	10	3
46-1000-0-665	12	9
46-1000-0-665	14	27
46-1000-0-665	15	7
46-1000-0-665	16	10
46-1000-0-665	17	15
46-1000-0-665	18	6
46-1000-0-665	20	11
46-1000-0-665	22	36
46-1000-0-665	23	21
46-1000-0-665	25	7
46-1000-0-665	27	65
46-1000-0-666	9	24
46-1000-0-666	10	46
46-1000-0-666	12	59
46-1000-0-666	13	33
46-1000-0-666	14	32
46-1000-0-666	15	16
46-1000-0-666	16	18
46-1000-0-666	19	33
46-1000-0-666	20	17
46-1000-0-666	26	9
46-1000-0-666	27	36
46-1000-0-667	9	58
46-1000-0-667	10	36
46-1000-0-667	11	8
46-1000-0-667	13	37
46-1000-0-667	15	11
46-1000-0-667	16	3
46-1000-0-667	17	48
46-1000-0-667	19	29
46-1000-0-667	20	22
46-1000-0-667	21	17
46-1000-0-667	23	9
46-1000-0-667	26	27
46-1000-0-667	27	49
46-1000-0-669	9	61
46-1000-0-669	10	13
46-1000-0-669	14	4
46-1000-0-669	19	4
46-1000-0-670	12	3
46-1000-0-670	21	9
46-1000-0-676	9	25
46-1000-0-676	10	47
46-1000-0-676	12	58
46-1000-0-676	13	34
46-1000-0-676	14	33
46-1000-0-676	15	15
46-1000-0-676	19	32
46-1000-0-676	20	16
46-1000-0-676	21	26
46-1000-0-676	26	8
46-1000-0-676	27	37
46-1000-1-092	25	36
46-1000-1-222	14	21
46-1000-1-613	14	50
46-1000-3-635	9	23
46-1000-3-635	19	20
46-1000-3-637	10	8
46-1000-3-655	17	39
46-1000-3-655	27	46
46-1000-3-659	9	16
46-1000-3-662	9	29
46-1000-3-662	16	36
46-1000-3-662	19	2
46-1000-3-662	26	3
46-1000-3-662	27	11
46-1000-3-662	28	7
46-1000-4-127	25	6
46-1000-4-351	20	49
46-1000-4-351	26	23
46-1000-4-351	27	73
46-1000-4-358	14	64
46-1000-4-404	14	53
46-1000-4-445	22	9
46-1000-4-642	10	31
46-1000-5-000	10	53
46-1000-5-061	11	15
46-1000-5-121	14	55
46-1000-6-176	15	5
46-1000-6-176	16	8
46-1000-6-178	14	11
46-1000-6-183	17	31
46-1000-6-185	18	20
46-1000-6-186	9	51
46-1000-6-187	10	45
46-1000-6-188	18	2
46-1000-6-191	9	37
46-1000-6-192	10	6
46-1000-6-195	8	28
46-1000-6-196	13	12
46-1000-6-197	8	15
46-1000-6-198	14	61
46-1000-6-199	27	20
46-1000-6-201	20	53
46-1000-6-203	13	10

INDEX

Parts No.	Page No.	Det. No.
46-1000-6-206	20	6
46-1000-6-209	13	40
46-1000-6-212	20	7
46-1000-6-212	27	43
46-1000-6-213	17	24
46-1000-6-214	17	2
46-1000-6-215	17	41
46-1000-6-216	17	46
46-1000-6-220	14	31
46-1000-6-220	19	7
46-1000-6-223	13	27
46-1000-6-225	16	2
46-1000-6-226	12	33
46-1000-6-227	13	43
46-1000-6-229	12	47
46-1000-6-232	12	56
46-1000-6-232	13	54
46-1000-6-233	18	14
46-1000-6-434	12	65
46-1000-6-444	13	45
46-1000-6-638	18	8
46-1000-6-905	13	2
46-1000-6-905	26	5
46-1000-6-905	28	10
46-1000-7-609	25	43
46-1000-7-650	9	10
46-1000-7-678	14	59
46-1000-8-200	1	2
46-1000-8-201	1	3
46-1000-8-201	7	22
46-1000-8-202	1	7
46-1000-8-202	5	5
46-1000-8-203	1	17
46-1000-8-204	7	5
46-1000-8-205	2	5
46-1000-8-206	2	6
46-1000-8-207	2	37
46-1000-8-207	3	37
46-1000-8-207	29	9
46-1000-8-208	3	22
46-1000-8-209	3	25
46-1000-8-209	29	26
46-1000-8-210	3	26
46-1000-8-210	29	27
46-1000-8-211	5	3
46-1000-8-212	5	14
46-1000-8-213	5	68
46-1000-8-214	5	72
46-1000-8-215	5	22
46-1000-8-216	5	10
46-1000-8-217	6	7
46-1000-8-218	6	8
46-1000-8-219	6	11
46-1000-8-220	6	19
46-1000-8-221	6	22
46-1000-8-222	6	31
46-1000-8-223	6	41
46-1000-8-224	7	12
46-1000-8-224	25	39
46-1000-8-225	7	20
46-1000-8-226	5	57
46-1000-8-226	29	37
46-1000-8-227	6	9
46-1000-8-229	1	16
46-1000-8-230	2	30
46-1000-8-233	2	3
46-1000-8-234	3	19
46-1000-8-235	2	10
46-1000-8-235	3	17
46-1000-8-236	2	20
46-1000-8-236	3	13
46-1000-8-237	2	21
46-1000-8-237	3	12
46-1000-8-238	2	50
46-1000-8-239	3	4
46-1000-8-240	3	28
46-1000-8-240	29	21
46-1000-8-241	3	41
46-1000-8-241	29	19
46-1000-8-242	3	6
46-1000-8-243	3	16
46-1000-8-244	6	15
46-1000-8-245	1	8
46-1000-8-246	6	12
46-1000-8-247	6	16
46-1000-8-248	5	15
46-1000-8-249	6	39
46-1000-8-250	6	40
46-1000-8-251	6	20
46-1000-8-252	1	14
46-1000-8-253	7	21
46-1000-8-255	5	60
46-1000-8-255	29	40
46-1000-8-256	7	10
46-1000-8-257	3	33
46-1000-8-258	29	14
46-1000-8-260	5	58
46-1000-8-260	29	38
46-1000-8-261	5	8
46-1000-8-262	6	23
46-1000-8-263	6	44
46-1000-8-264	5	59
46-1000-8-264	6	42
46-1000-8-264	29	39
46-1000-8-265	6	25
46-1000-8-266	5	32
46-1000-8-267	5	16
46-1000-8-268	5	40
46-1000-8-269	5	34
46-1000-8-269	29	4
46-1000-8-271	5	38
46-1000-8-272	5	35
46-1000-8-272	29	6
46-1000-8-273	5	17
46-1000-8-274	5	39
46-1000-8-275	5	54
46-1000-8-276	5	63
46-1000-8-277	5	21
46-1000-8-278	5	55
46-1000-8-279	5	46
46-1000-8-280	5	62
46-1000-8-280	29	16
46-1000-8-281	5	66
46-1000-8-282	5	47
46-1000-8-283	5	65
46-1000-8-284	5	52
46-1000-8-287	5	69
46-1000-8-289	1	12
46-1000-9-127	14	47
46-1000-9-142	14	48
46-1000-9-200	14	70
46-1000-9-209	25	44
46-1000-9-734	9	66
46-1000-9-736	11	13
46-1000-9-736	16	40
46-1000-9-736	22	14
46-1000-9-737	15	34
46-1000-9-737	16	62
46-1000-9-738	17	34
46-1000-9-738	19	3
46-1000-9-740	13	49
46-1000-9-740	15	3
46-1000-9-740	17	36
46-1000-9-740	19	17
46-1000-9-744	9	42
46-1000-9-744	17	17
46-1000-9-745	9	32

INDEX

Parts No.	Page No.	Det. No.
46-1000-9-745	12	29
46-1000-9-745	16	21
46-1000-9-746	8	12
46-1000-9-746	14	41
46-1000-9-746	18	4
46-1000-9-747	10	44
46-1000-9-747	12	52
46-1000-9-747	13	50
46-1000-9-747	15	9
46-1000-9-747	17	22
46-1000-9-748	8	20
46-1000-9-748	9	36
46-1000-9-748	14	29
46-1000-9-749	8	4
46-1000-9-749	9	2
46-1000-9-749	23	19
46-1000-9-750	17	23
46-1000-9-751	12	46
46-1000-9-752	10	39
46-1000-9-752	14	2
46-1000-9-752	15	40
46-1000-9-752	16	15
46-1000-9-753	2	47
46-1000-9-753	10	35
46-1000-9-753	15	53
46-1000-9-753	16	7
46-1000-9-753	26	26
46-1000-9-754	15	10
46-1000-9-754	19	28
46-1000-9-754	27	25
46-1000-9-755	13	52
46-1000-9-755	17	28
46-1000-9-755	18	23
46-1000-9-755	19	13
46-1000-9-755	21	15
46-1000-9-758	10	51
46-1000-9-758	19	36
46-1000-9-758	26	34
46-1000-9-758	27	35
46-1000-9-759	19	25
46-1000-9-759	26	38
46-1000-9-759	27	62
46-1000-9-760	26	17
46-1000-9-761	17	9
46-1000-9-761	19	10
46-1000-9-761	26	30
46-1000-9-761	27	51
46-1000-9-768	10	28
46-1000-9-770	13	19
46-1000-9-774	12	2
46-1000-9-774	21	10
46-1000-9-775	27	23
46-1000-9-776	17	45
46-1000-9-776	27	3
46-1000-9-777	9	26
46-1000-9-777	21	25
46-1000-9-793	13	57
46-1000-9-793	17	19
46-1000-9-797	15	26
46-1000-9-797	16	54
46-1000-9-800	27	7
46-1000-9-801	10	21
46-1000-9-801	13	56
46-1000-9-804	25	26
46-1000-9-807	13	31
46-1000-9-811	25	22
46-1000-9-812	25	14
46-1000-9-814	13	8
46-1000-9-858	13	15
46-1000-9-911	10	42
46-1000-9-914	20	8
46-1000-9-928	22	5
46-1000-9-935	17	52
46-1000-9-936	15	4
46-1000-9-936	20	15
46-1000-9-936	26	7
46-1000-9-936	26	14
46-1000-9-940	15	14
46-1000-9-940	16	27
46-1000-9-940	19	31
46-1000-9-954	13	30
46-1000-9-956	20	2
46-1000-9-957	20	29
46-1000-9-959	25	21
46-1000-9-964	16	46
46-1000-9-970	9	35
46-1000-9-970	11	10
46-1000-9-970	13	38
46-1000-9-970	14	37
46-1000-9-970	16	6
46-1000-9-970	20	13
46-1000-9-970	26	41
46-1000-9-970	27	48
46-1000-9-972	16	17
46-1000-9-974	12	16
46-1000-9-974	16	13
46-1000-9-974	27	41
46-1000-9-976	14	24
46-1000-9-976	16	43
46-1000-9-976	17	42
46-1000-9-976	18	25
46-1000-9-976	20	51
46-1000-9-976	23	8
46-1000-9-976	27	59
46-1000-9-976	28	5
46-1000-9-977	9	57
46-1000-9-977	11	7
46-1000-9-977	16	30
46-1000-9-977	27	72
46-1000-9-978	20	32
46-1000-9-980	9	56
46-1000-9-980	16	38
46-1000-9-992	12	64
46-1000-9-992	16	12
46-1000-9-992	17	13
46-1000-9-992	22	34
46-1000-9-994	12	62
46-1000-9-994	13	4
46-1000-9-994	21	4
46-1000-9-995	25	24
46-1001-0-018	12	43
46-1001-0-019	10	29
46-1001-0-019	14	7
46-1001-0-024	23	13
46-1001-0-032	16	48
46-1001-0-054	10	32
46-1001-0-054	16	49
46-1001-0-054	17	18
46-1001-0-055	9	13
46-1001-0-055	20	42
46-1001-0-055	27	32
46-1001-0-056	9	12
46-1001-0-057	14	35
46-1001-0-057	20	43
46-1001-0-057	27	31
46-1001-0-057	28	13
46-1001-0-078	23	17
46-1001-0-117	23	18
46-1001-0-143	23	25
46-1001-0-148	28	9
46-1001-0-182	17	6
46-1001-0-184	23	11
46-1001-0-188	23	5
46-1001-0-227	23	1
46-1001-0-239	23	15
46-1001-0-241	14	5
46-1001-0-242	14	68
46-1001-0-244	16	44
46-1001-0-246	10	27

INDEX

Parts No.	Page No.	Det. No.
46-1001-0-247	9	11
46-1001-0-248	13	55
46-1001-0-249	10	10
46-1001-0-250	17	27
46-1001-0-251	17	51
46-1001-0-254	15	22
46-1001-0-254	16	26
46-1001-0-254	26	19
46-1001-0-254	27	55
46-1001-0-256	12	36
46-1001-0-258	10	17
46-1001-0-258	12	39
46-1001-0-258	13	59
46-1001-0-258	14	8
46-1001-0-258	16	50
46-1001-0-258	17	7
46-1001-0-260	8	24
46-1001-0-260	9	67
46-1001-0-260	10	56
46-1001-0-260	12	55
46-1001-0-260	13	60
46-1001-0-260	14	71
46-1001-0-260	15	51
46-1001-0-260	16	69
46-1001-0-260	17	55
46-1001-0-260	20	54
46-1001-0-260	23	37
46-1001-0-260	26	47
46-1001-0-260	27	70
46-1001-0-260	28	14
46-1001-0-261	23	38
46-1001-0-261	28	15
46-1001-0-262	23	39
46-1001-0-262	28	16
46-1001-0-264	12	35
46-1001-0-264	23	6
46-1001-0-264	28	12
46-1001-0-265	23	2
46-1001-0-266	23	22
46-1001-0-267	23	14
46-1001-0-269	23	12
46-1001-0-269	28	11
46-1001-0-270	23	4
46-1001-0-271	12	54
46-1001-0-278	23	3
46-1001-0-283	10	9
46-1001-0-283	14	65
46-1001-0-285	9	14
46-1001-0-296	27	30
46-1001-0-300	15	21
46-1001-0-301	27	34
46-1001-0-304	12	38
46-1001-0-313	28	2
46-1001-0-721	14	26
46-1001-0-842	22	30
46-1001-0-846	22	31
46-1001-0-894	22	25-1
46-1001-0-895	22	25-2
46-1001-0-896	22	25-3
46-1001-0-897	22	25-4
46-1001-0-900	22	1-1
46-1001-0-913	22	25-5
46-1001-0-914	20	26
46-1001-0-954	22	23
46-1001-0-955	22	4-1
46-1001-0-956	22	3
46-1001-0-957	22	2-1
46-1001-0-958	12	11
46-1001-0-976	22	4-2
46-1001-0-977	22	2-2
46-1001-0-978	22	1-2
46-1001-0-979	22	25-6
46-1001-0-987	22	16-1
46-1001-0-988	22	16-2
46-1001-1-095	26	48-1
46-1001-1-095	27	71-1
46-1001-1-095	28	17
46-1001-1-096	26	48-2
46-1001-1-096	27	71-2
46-1001-1-097	26	48-3
46-1001-1-097	27	71-3
46-1001-1-098	26	48-4
46-1001-1-098	27	71-4
46-1001-4-005	17	33
46-1001-4-010	17	44-2
46-1001-4-011	17	44-1
46-1001-4-023	18	10
46-1001-4-030	17	32
46-1001-4-032	13	20
46-1001-4-056	13	25
46-1001-4-101	19	1
46-1001-4-108	16	37
46-1001-4-117	16	39
46-1001-4-119	16	35
46-1001-4-120	16	33
46-1001-4-129	15	6
46-1001-4-129	16	9
46-1001-4-130	15	30
46-1001-4-130	16	58
46-1001-4-136	24	3
46-1001-4-143	15	47
46-1001-4-144	15	41
46-1001-4-144	16	68
46-1001-4-186	9	50
46-1001-4-224	10	49
46-1001-4-225	10	50
46-1001-4-244	14	20-1
46-1001-4-244	24	2-1
46-1001-4-260	10	52
46-1001-4-300	13	48
46-1001-4-301	13	51
46-1001-4-302	13	47
46-1001-4-356	27	42
46-1001-4-401	26	15
46-1001-4-401	27	50
46-1001-4-402	14	36
46-1001-4-402	16	16
46-1001-4-408	11	2
46-1001-4-409	11	1
46-1001-4-411	11	12
46-1001-4-418	22	8
46-1001-4-421	22	12
46-1001-4-423	11	14
46-1001-4-424	11	11
46-1001-4-425	11	6
46-1001-4-426	14	46-1
46-1001-4-427	14	46-2
46-1001-4-430	10	30
46-1001-4-481	14	1
46-1001-4-482	14	10
46-1001-4-483	14	13-1
46-1001-4-489	14	46-3
46-1001-4-501	14	58
46-1001-4-502	14	66
46-1001-4-503	14	63-1
46-1001-4-504	14	63-2
46-1001-4-505	14	51-1
46-1001-4-506	14	52-1
46-1001-4-507	14	51-2
46-1001-4-508	14	52-2
46-1001-4-510	14	69
46-1001-4-512	13	1
46-1001-4-521	9	41-1
46-1001-4-522	9	41-2
46-1001-4-523	9	8
46-1001-4-525	10	2
46-1001-4-528	10	43
46-1001-4-529	10	34

INDEX

Parts No.	Page No.	Det. No.
46-1001-4-530	10	38
46-1001-4-531	10	40
46-1001-4-532	10	41
46-1001-4-533	9	15
46-1001-4-535	9	44
46-1001-4-536	9	17
46-1001-4-537	9	40-1
46-1001-4-538	9	40-2
46-1001-4-539	10	12
46-1001-4-564	21	24
46-1001-4-566	10	1
46-1001-4-571	9	19
46-1001-4-571	19	22
46-1001-4-572	9	20
46-1001-4-572	19	21
46-1001-4-573	14	19
46-1001-4-577	14	18
46-1001-4-579	14	72
46-1001-4-580	26	49
46-1001-4-584	12	8
46-1001-4-589	18	17-1
46-1001-4-589	24	7
46-1001-4-591	17	35
46-1001-4-592	17	38
46-1001-4-597	17	50
46-1001-4-598	17	21
46-1001-4-599	17	26
46-1001-4-601	18	12
46-1001-4-603	17	43-2
46-1001-4-604	17	43-1
46-1001-4-605	17	53
46-1001-4-606	17	16
46-1001-4-612	18	15
46-1001-4-613	15	52
46-1001-4-618	18	19
46-1001-4-620	18	1-1
46-1001-4-621	18	1-2
46-1001-4-625	17	1
46-1001-4-628	18	16-1
46-1001-4-629	18	16-2
46-1001-4-638	17	40-2
46-1001-4-639	17	40-1
46-1001-4-647	18	13
46-1001-4-653	18	7
46-1001-4-654	17	37
46-1001-4-654	27	45
46-1001-4-655	13	3
46-1001-4-656	12	53
46-1001-4-659	13	39
46-1001-4-661	13	41
46-1001-4-675	13	42
46-1001-4-680	13	44
46-1001-4-693	16	42
46-1001-4-704	15	39
46-1001-4-705	16	67
46-1001-4-707	15	29
46-1001-4-707	16	57
46-1001-4-709	15	18
46-1001-4-711	15	13
46-1001-4-720	13	9
46-1001-4-722	20	20
46-1001-4-723	20	31
46-1001-4-725	20	4
46-1001-4-728	12	1
46-1001-4-734	26	44
46-1001-4-734	27	68
46-1001-4-744	23	16
46-1001-4-745	23	7
46-1001-4-753	20	50
46-1001-4-756	20	36
46-1001-4-757	20	34
46-1001-4-758	20	14
46-1001-4-758	26	13
46-1001-4-759	20	35
46-1001-4-760	20	37
46-1001-4-761	20	38
46-1001-4-763	20	3
46-1001-4-767	20	1
46-1001-4-769	20	18
46-1001-4-770	12	51
46-1001-4-780	12	32
46-1001-4-780	16	24
46-1001-4-797	22	15-1
46-1001-4-798	22	15-2
46-1001-4-800	24	33
46-1001-4-801	24	30-3
46-1001-4-802	24	30-7
46-1001-4-803	24	32-1
46-1001-4-804	24	32-2
46-1001-4-805	24	34
46-1001-4-806	24	31
46-1001-4-807	24	35
46-1001-4-817	15	43
46-1001-4-840	14	9
46-1001-4-842	15	45
46-1001-4-850	27	58
46-1001-4-856	27	6
46-1001-4-858	27	2
46-1001-4-861	27	47
46-1001-4-863	27	13
46-1001-4-864	27	24
46-1001-4-865	27	16
46-1001-4-866	27	15
46-1001-4-867	27	12
46-1001-4-868	27	29
46-1001-4-869	27	17
46-1001-4-870	27	22
46-1001-4-871	27	44
46-1001-4-872	27	57
46-1001-4-873	27	60
46-1001-4-874	27	10
46-1001-4-875	27	63
46-1001-4-876	27	27
46-1001-4-877	27	39
46-1001-4-878	27	61
46-1001-4-881	26	25
46-1001-4-883	26	24
46-1001-4-884	26	12
46-1001-4-885	26	4
46-1001-4-887	26	2
46-1001-4-889	26	6
46-1001-4-890	26	37
46-1001-4-891	26	33
46-1001-4-899	15	17
46-1001-4-903	20	27
46-1001-4-914	27	64
46-1001-4-917	20	30
46-1001-4-918	20	12
46-1001-4-919	20	19
46-1001-4-920	20	25
46-1001-4-921	20	21
46-1001-4-924	12	25
46-1001-4-925	12	26
46-1001-4-928	27	4
46-1001-4-929	27	5
46-1001-4-935	28	3
46-1001-4-936	28	6
46-1001-4-937	28	8
46-1001-4-938	28	4
46-1001-4-942	26	40
46-1001-4-944	26	36
46-1001-4-946	26	11
46-1001-4-947	28	1
46-1001-4-971	10	25
46-1001-4-977	12	44
46-1001-4-979	25	8
46-1001-5-000	1	4
46-1001-5-003	1	13
46-1001-5-005	7	16

INDEX

Parts No.	Page No.	Det. No.
46-1001-5-006	7	17
46-1001-5-007	7	18
46-1001-5-008	7	19
46-1001-5-009	7	9
46-1001-5-010	7	8
46-1001-5-011	7	7
46-1001-5-012	7	14
46-1001-5-013	7	13
46-1001-5-014	7	11
46-1001-5-014	25	38
46-1001-5-015	7	15
46-1001-5-015	25	37
46-1001-5-016	7	4
46-1001-5-016	25	17
46-1001-5-017	7	2
46-1001-5-018	7	3
46-1001-5-020	1	15
46-1001-5-021	1	18
46-1001-5-022	1	19
46-1001-5-023	1	20
46-1001-5-025	2	48
46-1001-5-027	2	12
46-1001-5-028	2	11
46-1001-5-029	2	14
46-1001-5-030	2	15
46-1001-5-030	29	7
46-1001-5-033	2	4
46-1001-5-034	2	7
46-1001-5-037	2	23
46-1001-5-038	2	22
46-1001-5-039	2	19
46-1001-5-040	2	25
46-1001-5-041	2	18
46-1001-5-043	5	28
46-1001-5-046	2	34
46-1001-5-047	2	35
46-1001-5-054	1	11
46-1001-5-059	3	1
46-1001-5-060	3	2
46-1001-5-061	3	3
46-1001-5-062	3	5
46-1001-5-063	3	7
46-1001-5-064	3	11
46-1001-5-065	3	8
46-1001-5-066	3	10
46-1001-5-068	3	36
46-1001-5-069	3	35
46-1001-5-070	3	31
46-1001-5-071	3	32
46-1001-5-071	29	13

Parts No.	Page No.	Det. No.
46-1001-5-072	3	39
46-1001-5-073	3	40
46-1001-5-073	5	45
46-1001-5-073	29	18
46-1001-5-074	3	42
46-1001-5-075	3	27
46-1001-5-076	3	29
46-1001-5-078	3	24
46-1001-5-081	3	43
46-1001-5-081	24	19
46-1001-5-083	29	33
46-1001-5-084	3	20
46-1001-5-084	29	34
46-1001-5-086	29	31
46-1001-5-088	3	21
46-1001-5-088	29	36
46-1001-5-089	5	4
46-1001-5-090	5	9
46-1001-5-091	5	7
46-1001-5-092	5	6
46-1001-5-093	5	18
46-1001-5-094	5	13
46-1001-5-095	5	50
46-1001-5-097	5	2
46-1001-5-098	5	53
46-1001-5-099	5	48
46-1001-5-100	5	64
46-1001-5-101	5	51
46-1001-5-105	5	67
46-1001-5-106	5	71
46-1001-5-107	5	70
46-1001-5-108	5	49
46-1001-5-109	2	29
46-1001-5-110	7	6
46-1001-5-111	7	1
46-1001-5-151	24	22
46-1001-5-152	24	24
46-1001-5-153	24	25
46-1001-5-154	24	15
46-1001-5-156	6	34
46-1001-5-157	6	17
46-1001-5-158	6	18
46-1001-5-159	6	24
46-1001-5-160	6	29
46-1001-5-161	6	28
46-1001-5-162	6	27
46-1001-5-163	6	30
46-1001-5-164	6	21
46-1001-5-166	6	14
46-1001-5-167	6	13

Parts No.	Page No.	Det. No.
46-1001-5-168	6	5
46-1001-5-169	6	3
46-1001-5-170	6	2
46-1001-5-171	6	4
46-1001-5-172	6	10
46-1001-5-173	6	6
46-1001-5-174	6	1
46-1001-5-175	5	38
46-1001-5-176	24	17
46-1001-5-177	24	29
46-1001-5-179	24	27
46-1001-5-180	24	26
46-1001-5-181	6	36
46-1001-5-182	6	37
46-1001-5-184	2	46
46-1001-5-200	9	41-3
46-1001-5-201	14	63-3
46-1001-5-202	9	40-3
46-1001-5-216	15	23-1
46-1001-5-217	15	23-2
46-1001-5-218	15	23-3
46-1001-5-220	12	37
46-1001-5-221	12	42
46-1001-5-222	13	21
46-1001-5-223	13	24
46-1001-5-224	12	13
46-1001-5-226	20	52
46-1001-5-235	26	45
46-1001-5-235	27	69
46-1001-5-237	15	27
46-1001-5-238	16	55
46-1001-5-240	15	35
46-1001-5-240	16	63
46-1001-5-242	15	37
46-1001-5-242	16	65
46-1001-5-243	15	36
46-1001-5-243	16	64
46-1001-5-246	15	28
46-1001-5-246	16	56
46-1001-5-254	14	46-4
46-1001-5-255	14	46-5
46-1001-5-256	14	46-6
46-1001-5-257	15	46
46-1001-5-292	14	20-2
46-1001-5-292	24	2-2
46-1001-5-293	9	40-4
46-1001-5-294	9	40-5
46-1001-5-295	9	40-6
46-1001-5-296	9	41-4
46-1001-5-297	9	41-5

INDEX

Parts No.	Page No.	Det. No.
46-1001-5-298	9	41-6
46-1001-5-299	14	63-4
46-1001-5-300	14	63-5
46-1001-5-301	14	63-6
46-1001-5-302	14	13-2
46-1001-5-414	25	4
46-1001-5-415	25	15
46-1001-5-416	25	18
46-1001-5-418	25	10
46-1001-5-419	25	23
46-1001-5-422	25	20
46-1001-5-423	25	19
46-1001-5-424	25	16
46-1001-5-425	25	25
46-1001-5-427	25	42
46-1001-5-434	24	30-1
46-1001-5-435	24	30-2
46-1001-5-436	24	30-4
46-1001-5-437	24	30-5
46-1001-5-438	24	30-6
46-1001-5-439	24	30-8
46-1001-5-443	10	26
46-1001-5-463	17	8
46-1001-5-466	15	23-4
46-1001-5-468	15	23-5
46-1001-5-470	15	25-6
46-1001-5-475	12	34
46-1001-5-484	9	27
46-1001-5-485	9	28
46-1001-5-486	9	33
46-1001-5-487	15	25
46-1001-8-826	12	60
46-1002-0-126	25	30
46-1002-2-837	22	13
46-1002-3-381	17	12
46-1003-2-719	20	48
46-1003-2-719	26	22
46-1003-2-719	27	52
46-1003-5-767	28	18
46-1003-6-104	12	41
46-1003-6-133	27	40
46-1003-7-108	25	34
46-1003-7-919	24	23
46-1006-0-248	25	5
46-1007-7-286	9	22
46-1007-7-286	19	19
46-1007-7-296	9	9
46-1008-0-232	25	27
46-1008-0-705	25	28
46-1008-0-714	10	11
46-1008-5-276	25	29
46-1009-3-514	25	35
46-1009-3-535	25	33
46-1009-4-562	10	7
46-1009-9-051	24	16
46-1009-9-134	24	21
46-1009-9-135	24	28
46-1009-9-136	24	14
46-1009-9-137	24	13
46-1009-9-138	24	12
46-1009-9-139	24	11
46-1009-9-140	24	10
46-1011-0-067	17	30
46-1016-0-000	14	17
46-1016-0-001	8	8
46-1016-0-001	14	67
46-1016-0-001	27	18
46-1018-0-013	9	39
46-1034-0-005	12	61
46-1109-1-017	8	22
46-1109-1-060	14	22
46-1109-1-077	26	18
46-1109-1-078	26	29
46-1109-1-079	27	54
46-1109-8-007	26	20
46-1109-8-007	27	56
46-1125-5-004	18	3
46-1125-5-103	9	38
46-1125-5-112	9	60
46-1125-5-113	9	62
46-1125-5-130	20	44
46-1125-5-149	8	3
46-1125-5-153	8	21
46-1125-5-155	8	7
46-1125-5-156	8	11
46-1125-5-157	8	10
46-1125-5-158	8	9
46-1125-5-164	25	46
46-1125-5-166	14	60
46-1125-5-168	8	2
46-1125-5-169	8	13
46-1125-5-303	16	53
46-1125-5-323	8	17
46-1125-5-324	20	46
46-1125-5-696	14	13-3
46-1125-5-703	26	10
48-1000-0-032	15	32
48-1000-0-032	16	60
48-1000-0-488	9	49
48-1000-0-605	13	36
48-1000-5-612	12	6
48-1000-9-781	15	31
48-1000-9-781	16	59
48-1003-3-939	24	6
48-1011-0-002	14	45
48-1012-0-027	23	24
48-1012-0-027	25	49
48-1015-0-003	9	48
48-1019-0-026	15	48
48-1019-0-042	18	21
48-1026-0-004	11	5
48-1039-0-031	23	32
48-1092-0-000	1	5
48-1092-0-001	1	10
48-1092-0-002	2	9
48-1092-0-003	2	17
48-1092-0-004	2	33

INDEX

Parts No.	Page No.	Det. No.
48-1092-0-005	2	45
48-1092-0-006	2	43
48-1092-0-007	3	9
48-1092-0-008	3	30
48-1092-0-010	4	2
48-1092-0-011	4	5
48-1092-0-012	4	7
48-1092-0-013	4	10
48-1092-0-015	4	16
48-1092-0-016	4	18
48-1092-0-017	4	21
48-1092-0-018	4	23
48-1092-0-020	5	31
48-1092-0-021	5	20
48-1092-0-022	6	45
48-1093-0-000	3	34
48-1093-0-000	29	15
48-1093-0-001	3	38
48-1093-0-001	29	10
48-1093-0-002	5	44
48-1093-0-003	5	26
48-1093-0-004	5	36
48-1105-7-016	22	27
48-1106-0-003	22	32
48-1106-1-000	22	28
48-1106-4-024	19	30
48-1106-4-039	22	29
48-1106-6-011	21	20
48-1106-6-012	15	20
48-1106-6-013	26	21
48-1106-6-013	27	33
48-1106-6-014	12	28
48-1106-6-014	16	20
48-1106-6-065	8	26
48-1107-0-056	22	37
48-1109-0-035	23	27
48-1109-0-037	23	30
48-1109-0-042	23	28
48-1109-0-089	20	40
48-1109-1-020	15	19
48-1109-5-001	8	23
48-1109-8-008	8	27
48-1120-0-063	10	54-1
48-1120-0-064	10	54-2
48-1120-0-066	22	18
48-1120-0-073	25	45
48-1120-0-075	8	25
48-1120-0-082	22	19
48-1120-0-083	10	55
48-1125-5-148	8	16
48-1125-5-231	9	21
48-1125-5-246	9	18
48-1125-5-386	16	1
48-1125-5-388	16	5
48-1125-5-390	16	51-1
48-1125-5-391	16	51-2
48-1125-5-392	16	51-3
48-1125-5-393	16	51-4
48-1125-5-394	16	51-5
48-1125-5-395	16	51-6
48-1125-5-403	15	42
48-1125-5-404	15	44
48-1125-5-409	16	32
48-1125-5-410	19	35
48-1125-5-411	19	37
48-1125-5-412	19	18
48-1125-5-413	19	23
48-1125-5-415	19	27
48-1125-5-416	19	16
48-1125-5-419	19	9
48-1125-5-420	15	2
48-1125-5-421	15	1
48-1125-5-422	19	26
48-1125-5-430	14	14-1
48-1125-5-431	14	15-1
48-1125-5-432	14	16
48-1125-5-433	14	54
48-1125-5-434	14	57
48-1125-5-435	14	40
48-1125-5-443	16	29
48-1125-5-445	12	27
48-1125-5-497	22	20
48-1125-5-498	22	33
48-1125-5-499	12	22
48-1125-5-500	12	21
48-1125-5-502	12	4
48-1125-5-503	12	5
48-1125-5-505	13	28
48-1125-5-506	13	29
48-1125-5-507	13	32
48-1125-5-523	12	24
48-1125-5-524	11	3
48-1125-5-531	23	23
48-1125-5-565	13	35
48-1125-5-577	25	3
48-1125-5-578	25	2
48-1125-5-579	16	19
48-1125-5-580	29	22
48-1125-5-594	14	49
48-1125-5-600	14	14-2
48-1125-5-601	14	15-2
48-1125-5-626	25	1
48-1125-5-627	8	1
48-1125-5-705	3	23
48-1125-5-715	14	23
48-1125-5-716	14	39
48-1125-5-717	14	38
48-1125-5-718	14	12
48-1125-5-721	14	43
48-1125-5-721	24	1
48-1125-5-722	14	42
48-1125-5-723	9	46-2
48-1125-5-724	9	47-2
48-1125-5-745	9	34
48-1125-5-821	20	39
48-1125-5-849	16	34
48-1125-5-850	16	41
48-1125-5-851	16	45
48-1125-5-852	12	12
48-1125-5-853	16	14
48-1125-5-855	9	46-1
48-1125-5-856	9	47-1
48-1125-5-885	13	53
48-1125-5-898	27	1
48-1125-5-930	13	18-1
48-1125-5-931	13	17-1
48-1125-5-932	13	18-2
48-1125-5-933	13	17-2
48-1125-5-934	13	18-3
48-1125-5-935	13	17-3
48-1125-5-936	13	18-4
48-1125-5-937	13	17-4
48-1125-5-960	18	17-2
48-1125-5-961	18	17-3
48-1125-5-984	26	1
48-1125-5-986	29	1
48-1125-5-987	29	24

INDEX

Parts No.	Page No.	Det. No.
48-1125-6-040	25	9
48-1900-0-001	11	4-1
48-1900-0-002	11	4-2
48-1900-0-003	11	4-3
48-1900-0-004	11	4-4
48-1900-0-005	11	4-5
48-1900-0-006	11	4-6
48-1900-0-030	1	1
48-1900-0-031	29	2
48-1900-0-032	1	6
48-1900-0-033	1	9
48-1900-0-034	2	1
48-1900-0-035	2	2
48-1900-0-036	2	8
48-1900-0-037	29	3
48-1900-0-038	29	5
48-1900-0-039	2	16
48-1900-0-040	2	26
48-1900-0-041	2	27
48-1900-0-042	2	28
48-1900-0-043	2	31
48-1900-0-044	2	32
48-1900-0-045	2	36
48-1900-0-046	2	38
48-1900-0-047	2	39
48-1900-0-048	2	40
48-1900-0-049	2	49
48-1900-0-050	2	44
48-1900-0-051	2	41
48-1900-0-052	2	42
48-1900-0-053	3	14
48-1900-0-054	3	15
48-1900-0-055	3	18
48-1900-0-056	29	32
48-1900-0-057	29	20
48-1900-0-058	29	28
48-1900-0-060	29	25
48-1900-0-061	29	12
48-1900-0-062	29	11
48-1900-0-063	29	17
48-1900-0-064	29	8
48-1900-0-066	29	35
48-1900-0-067	4	1
48-1900-0-069	4	3
48-1900-0-070	4	4
48-1900-0-071	4	6
48-1900-0-072	4	8
48-1900-0-073	4	9
48-1900-0-074	4	11
48-1900-0-075	4	12
48-1900-0-076	4	13
48-1900-0-077	4	14
48-1900-0-078	4	15
48-1900-0-079	4	17
48-1900-0-080	4	19
48-1900-0-081	4	20
48-1900-0-082	4	22
48-1900-0-086	5	1
48-1900-0-087	5	56
48-1900-0-088	5	61
48-1900-0-088	29	30
48-1900-0-089	5	30
48-1900-0-090	5	33
48-1900-0-091	5	43
48-1900-0-092	5	42
48-1900-0-093	5	25
48-1900-0-094	29	23
48-1900-0-095	5	19
48-1900-0-096	5	23
48-1900-0-097	5	11
48-1900-0-098	5	12
48-1900-0-099	5	27
48-1900-0-101	5	29
48-1900-0-102	5	37