SiRUBA®
銀箭牌工業用縫紉機
INDUSTRIAL SEWING MACHINE

VC008
ATTACHMENT

零件圖 PARTS LIST

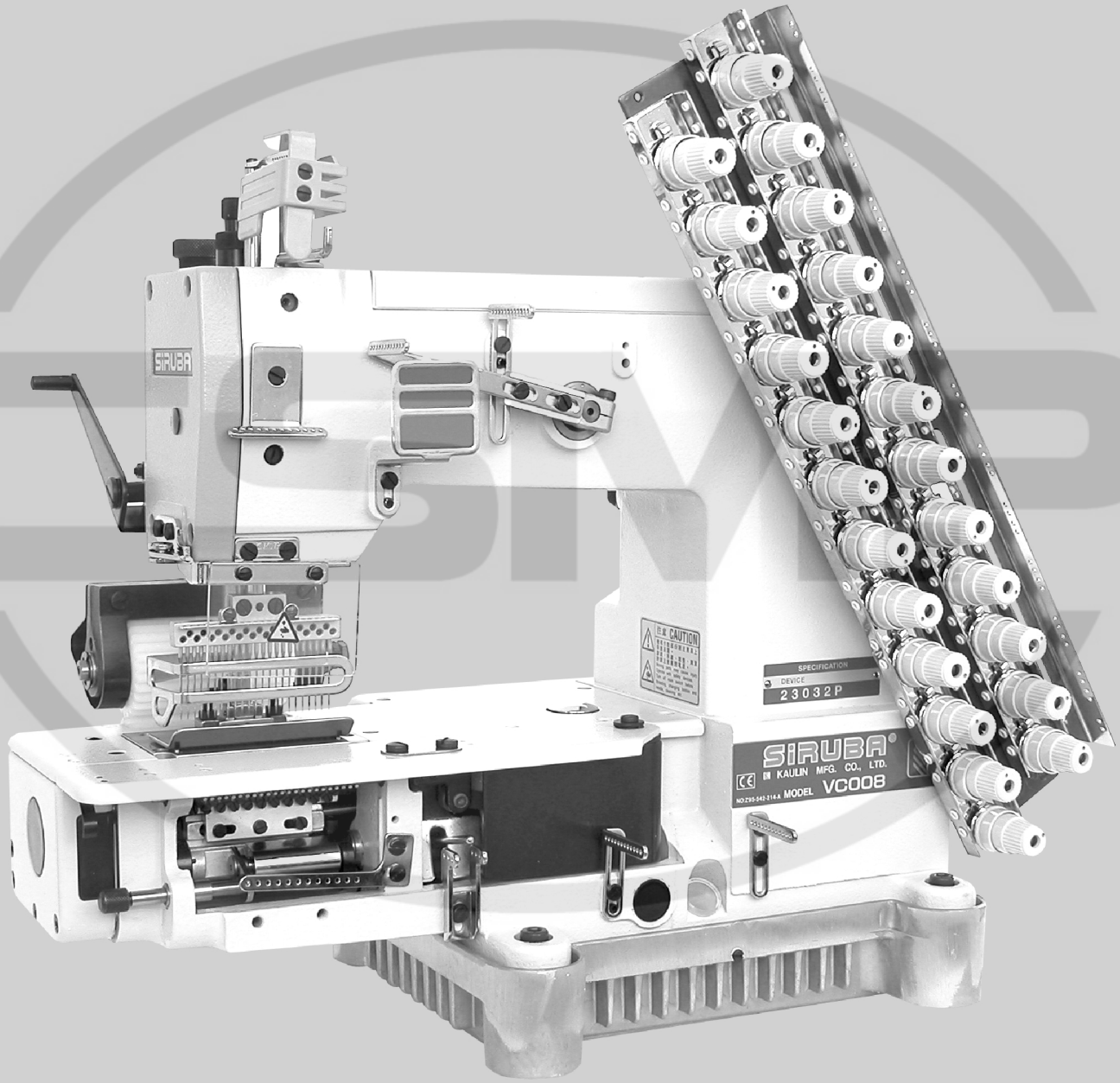

CE

高林股份有限公司
KAULIN MFG. CO., LTD.

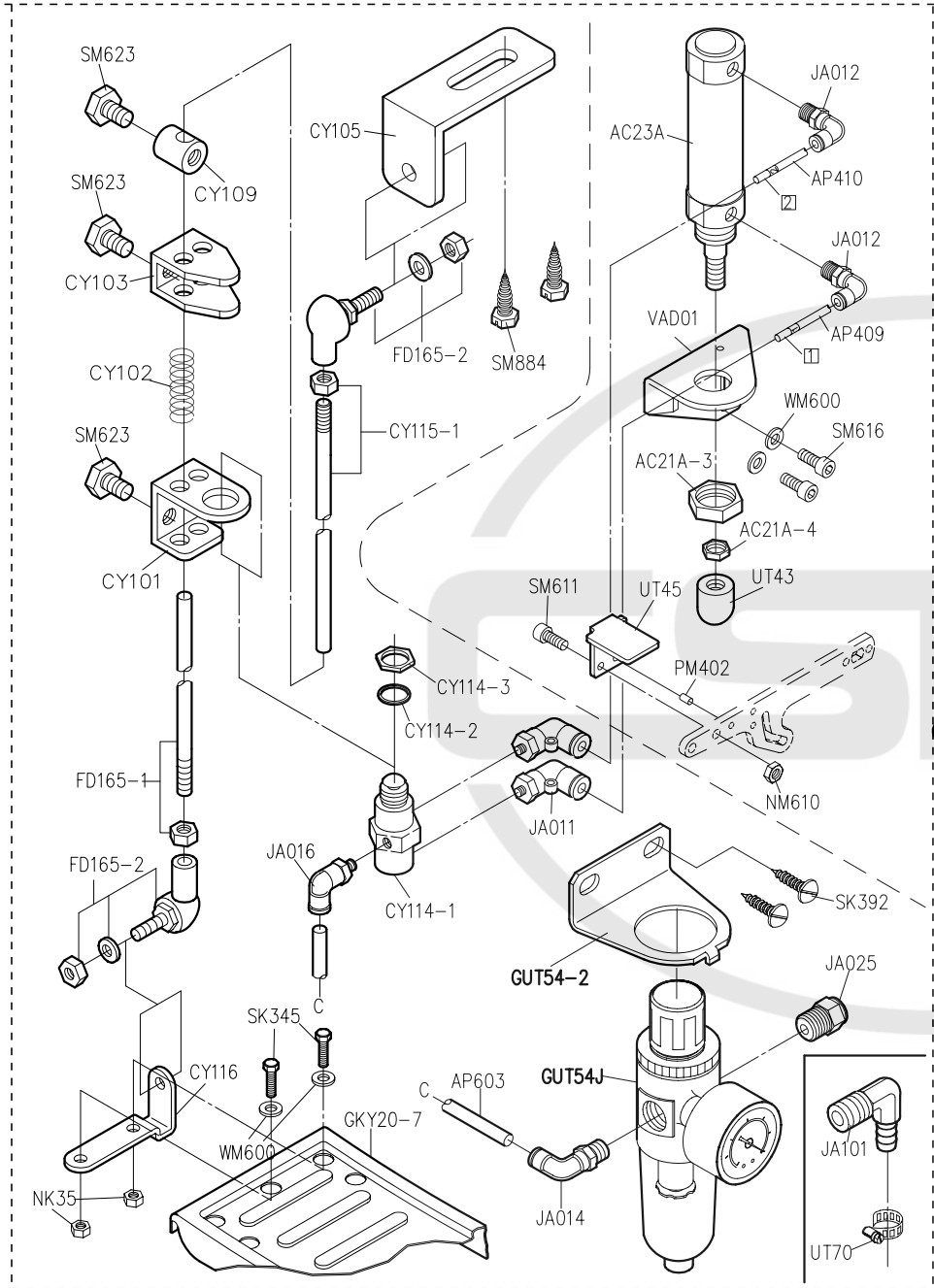

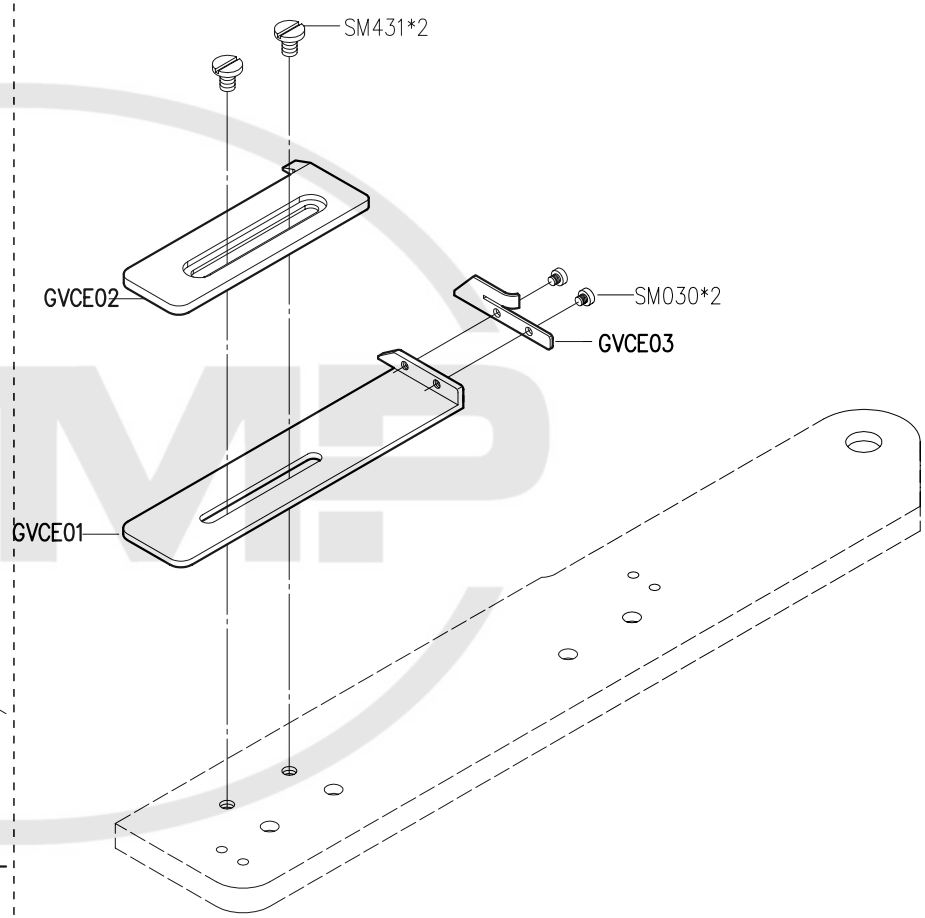

PARTS LIST FOR VAD GROUP

PARTS LIST FOR VCE GROUP

PARTS LIST FOR VCL-H (1) GROUP

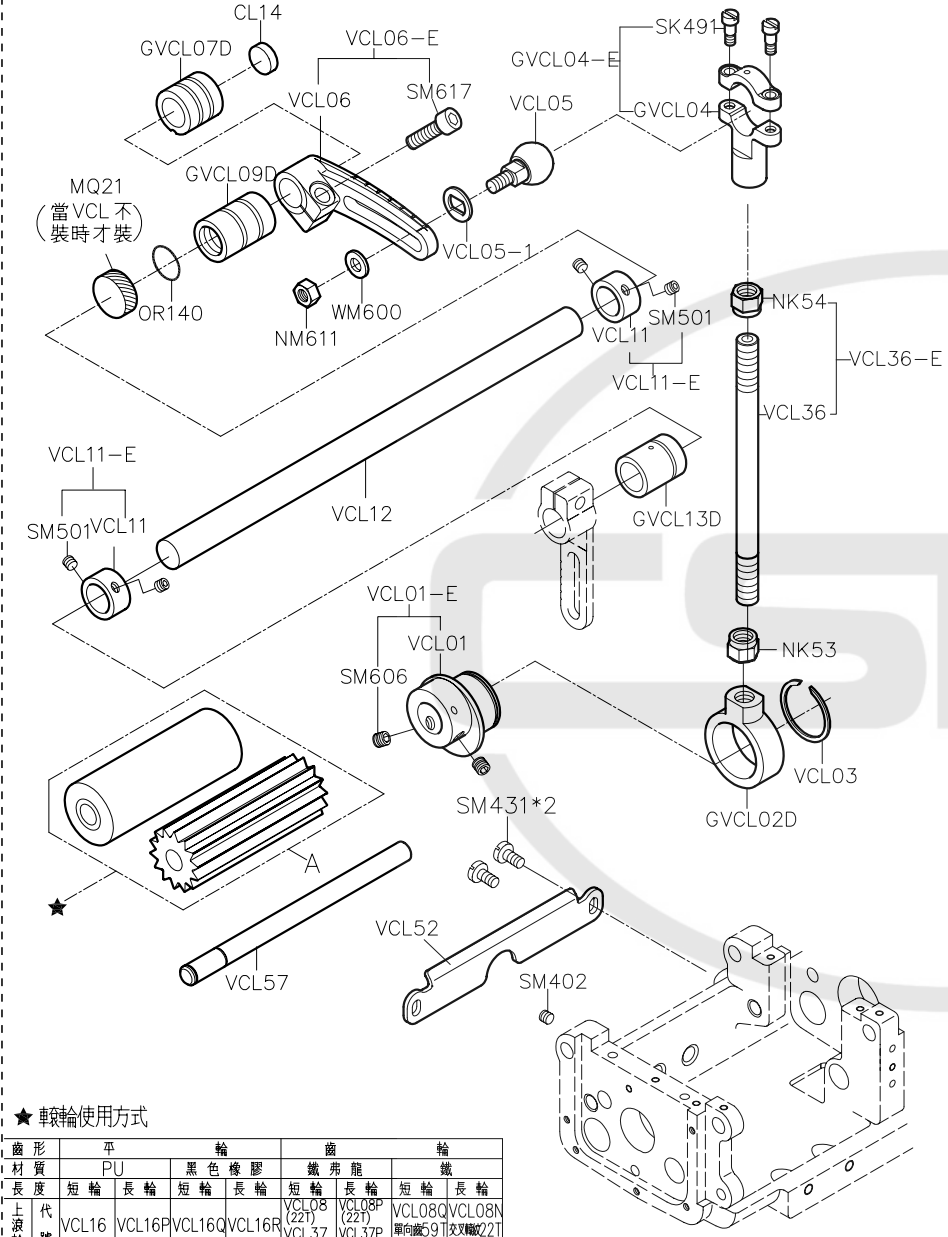

★ 輥輪使用方式

齒形		平輪				齒輪			
材質		PU		黑色橡膠		鐵弗龍		鐵	
長度		短輪	長輪	短輪	長輪	短輪	長輪	短輪	長輪
上浪輪	代號	VCL16	VCL16P	VCL16Q	VCL16R	VCL08 (22T) VCL37 (27T)	VCL08P (22T) VCL37P (27T)	VCL08Q 單向齒59T	VCL08N 交叉輪22T
下浪輪	代號		VCL28		VCL28R		VCL33 (14T) VCL33P (16T)		VCL33N 交叉輪22T

PARTS LIST FOR VCL-J (2) GROUP

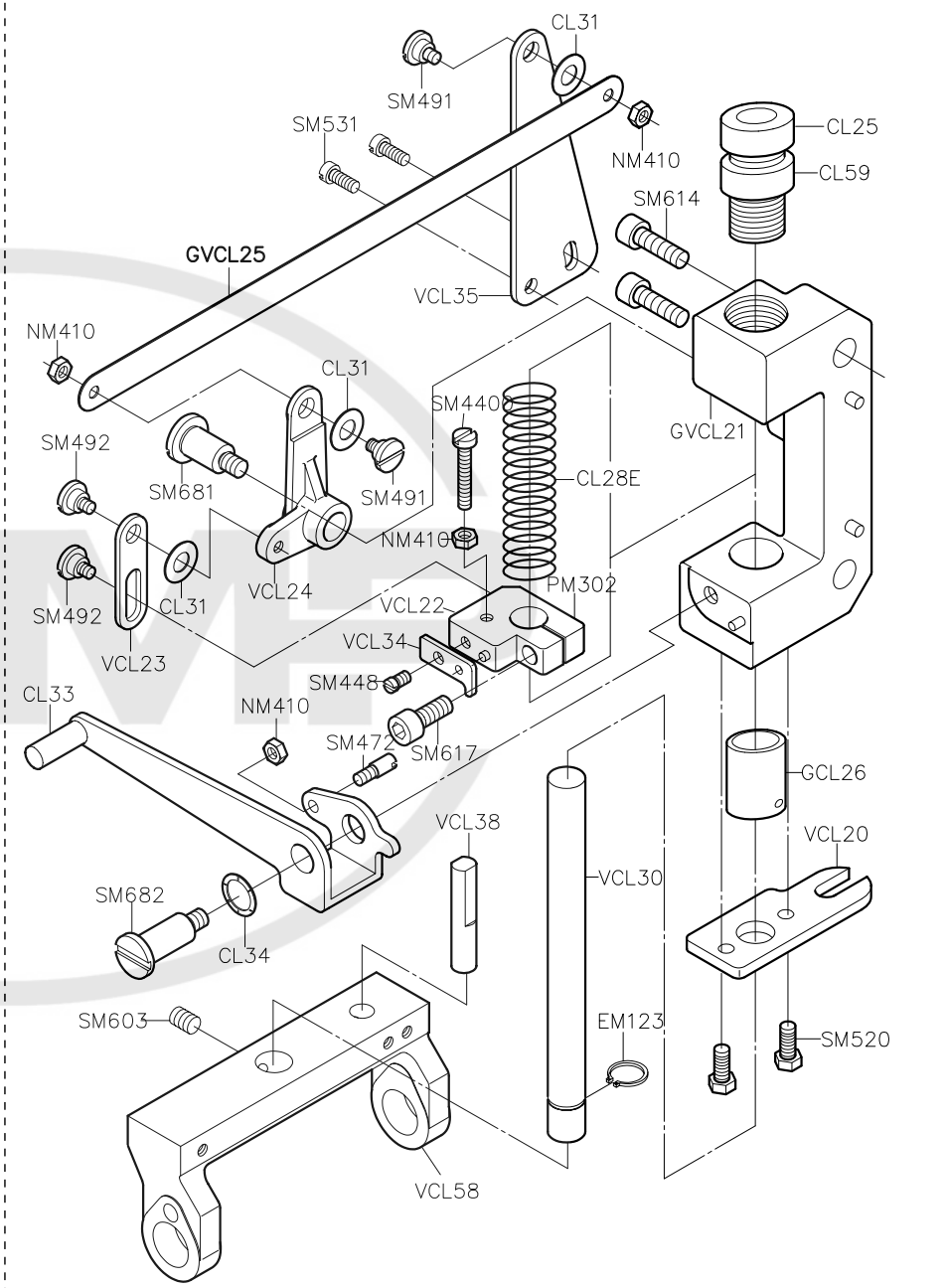

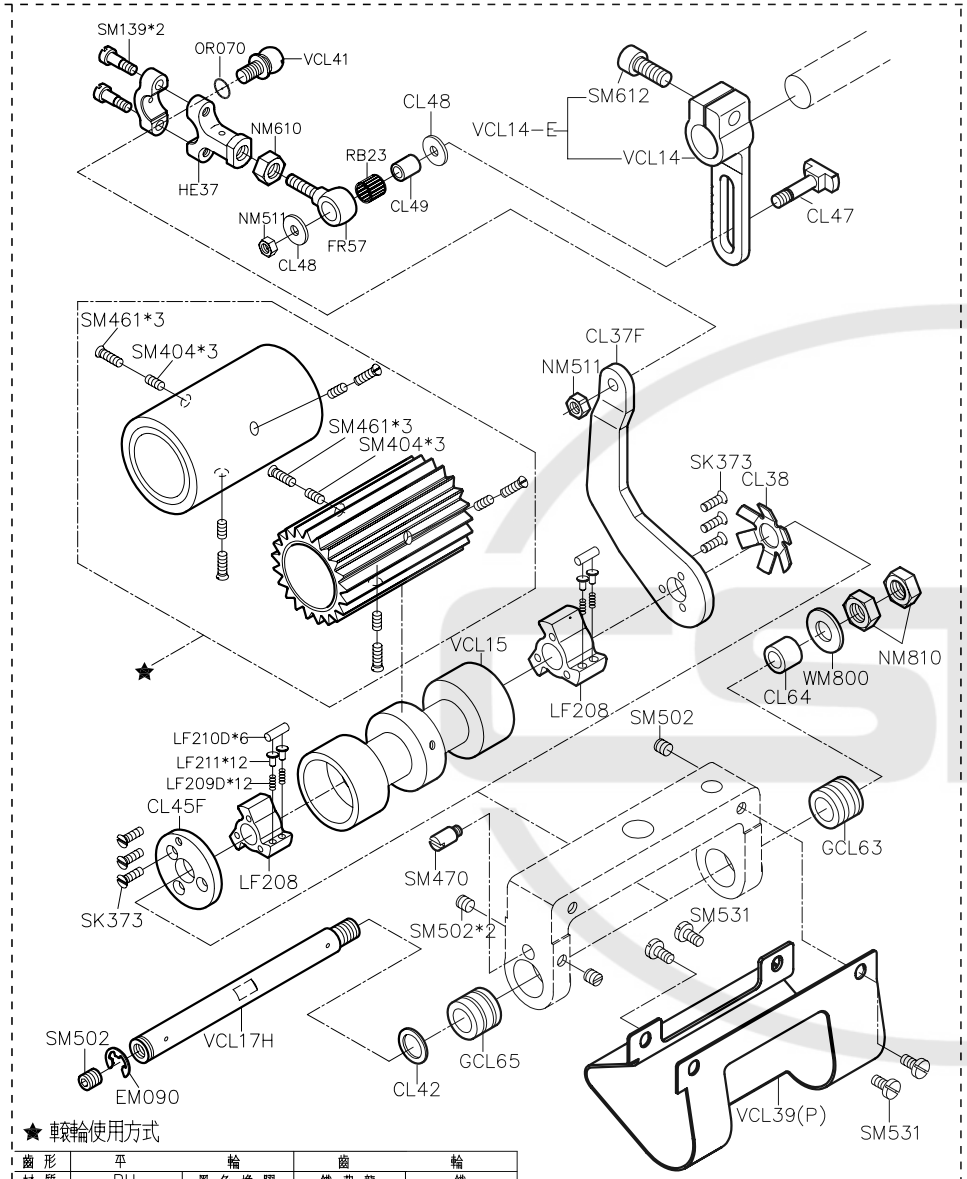

★ 輥輪使用方式

齒形		平輪				齒輪			
材質		PU		黑色橡膠		鐵弗龍		鐵	
長度		短輪	長輪	短輪	長輪	短輪	長輪	短輪	長輪
上滾輪	代號	VCL16	VCL16P	VCL16Q	VCL16R	VCL08 (221) VCL37 (271)	VCL08P (221) VCL37P (271)	VCL08Q 單向齒59T	VCL08N 交叉輪紋22T
下滾輪	代號		VCL28		VCL28R		VCL33 (141) VCL33P (161)		VCL33N 交叉 紋22T

PARTS LIST FOR VCL-H (3) GROUP

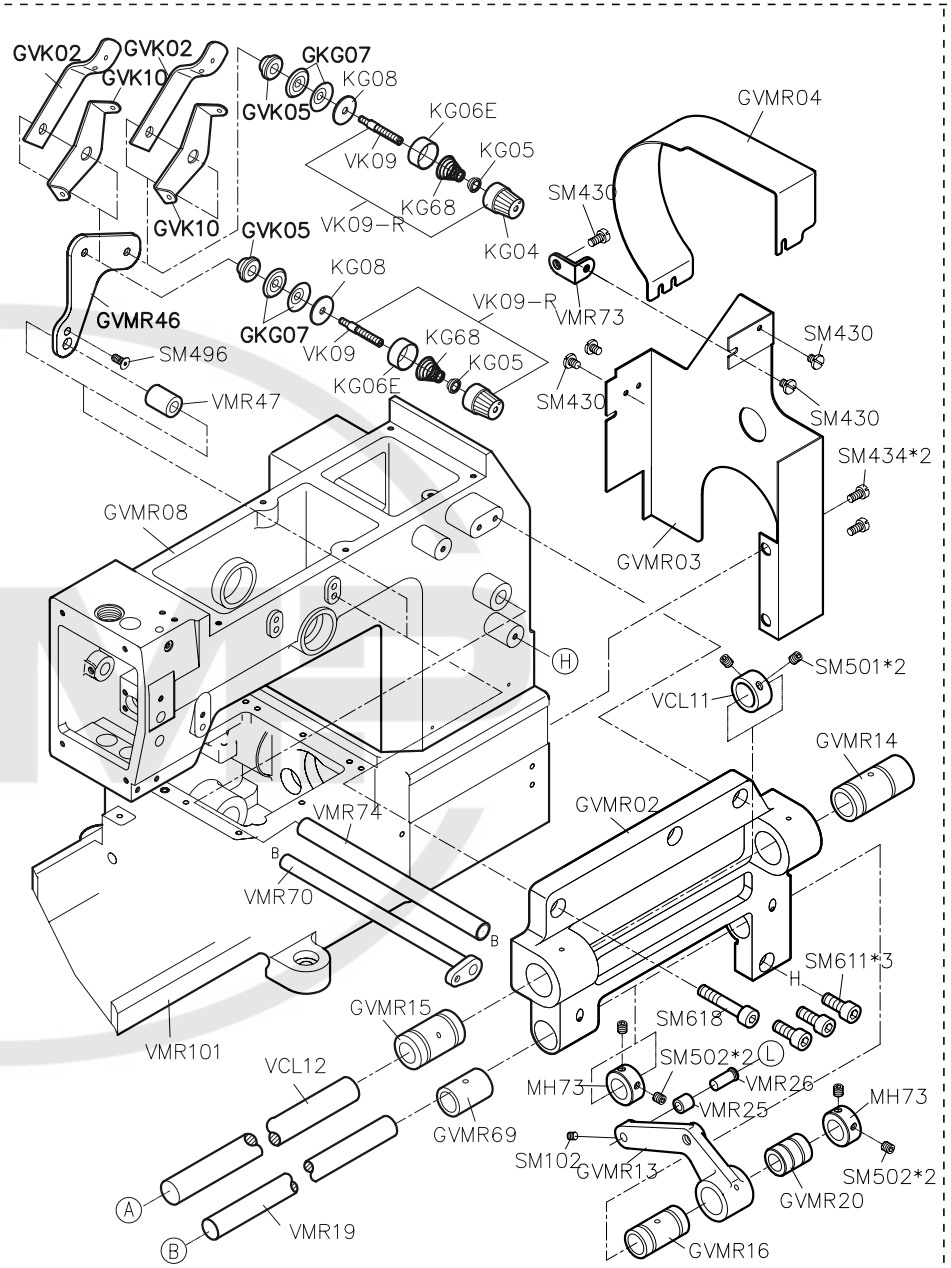

PARTS LIST FOR VMR (1) GROUP

PARTS LIST FOR VMR (2) GROUP

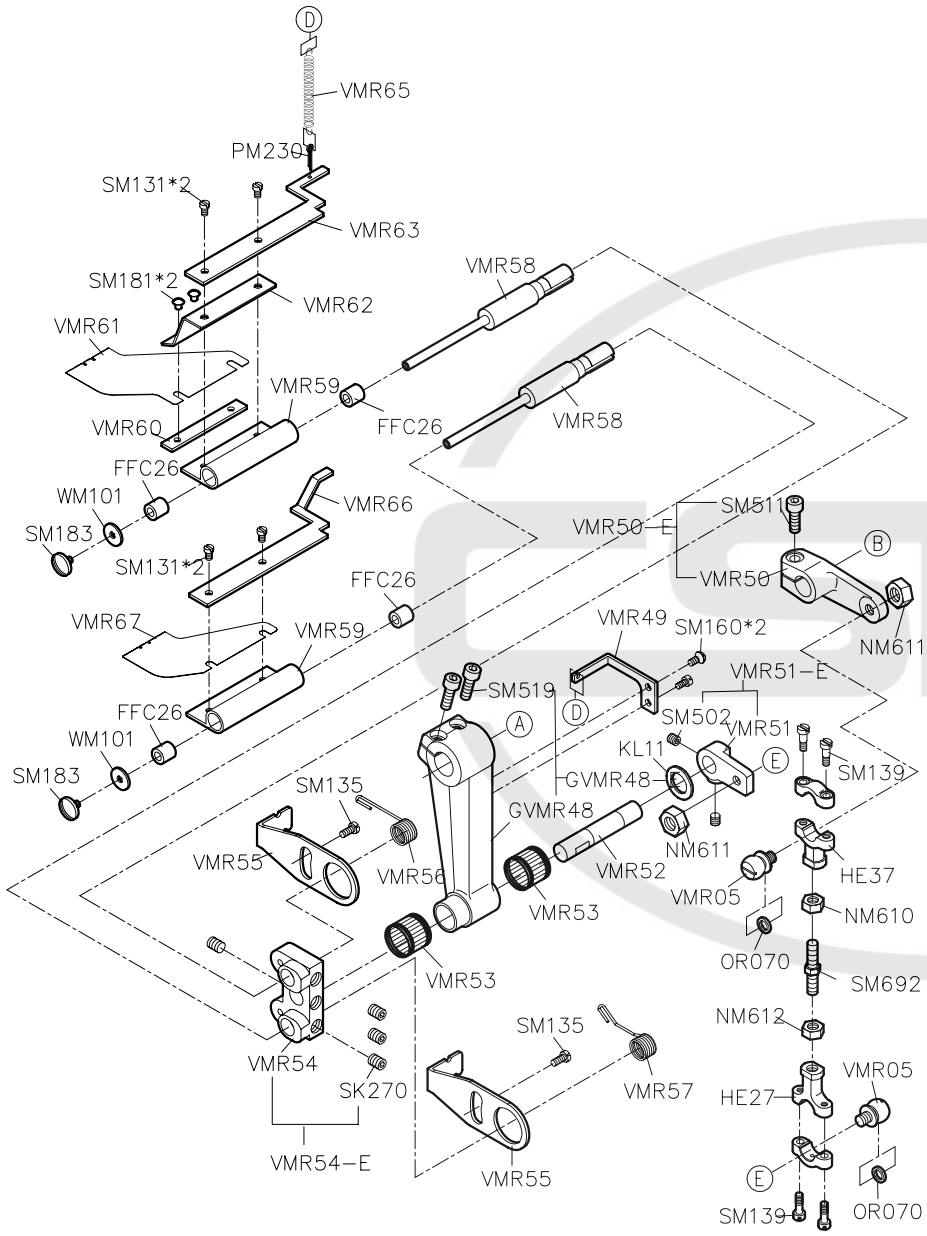

PARTS LIST FOR VMR (3) GROUP

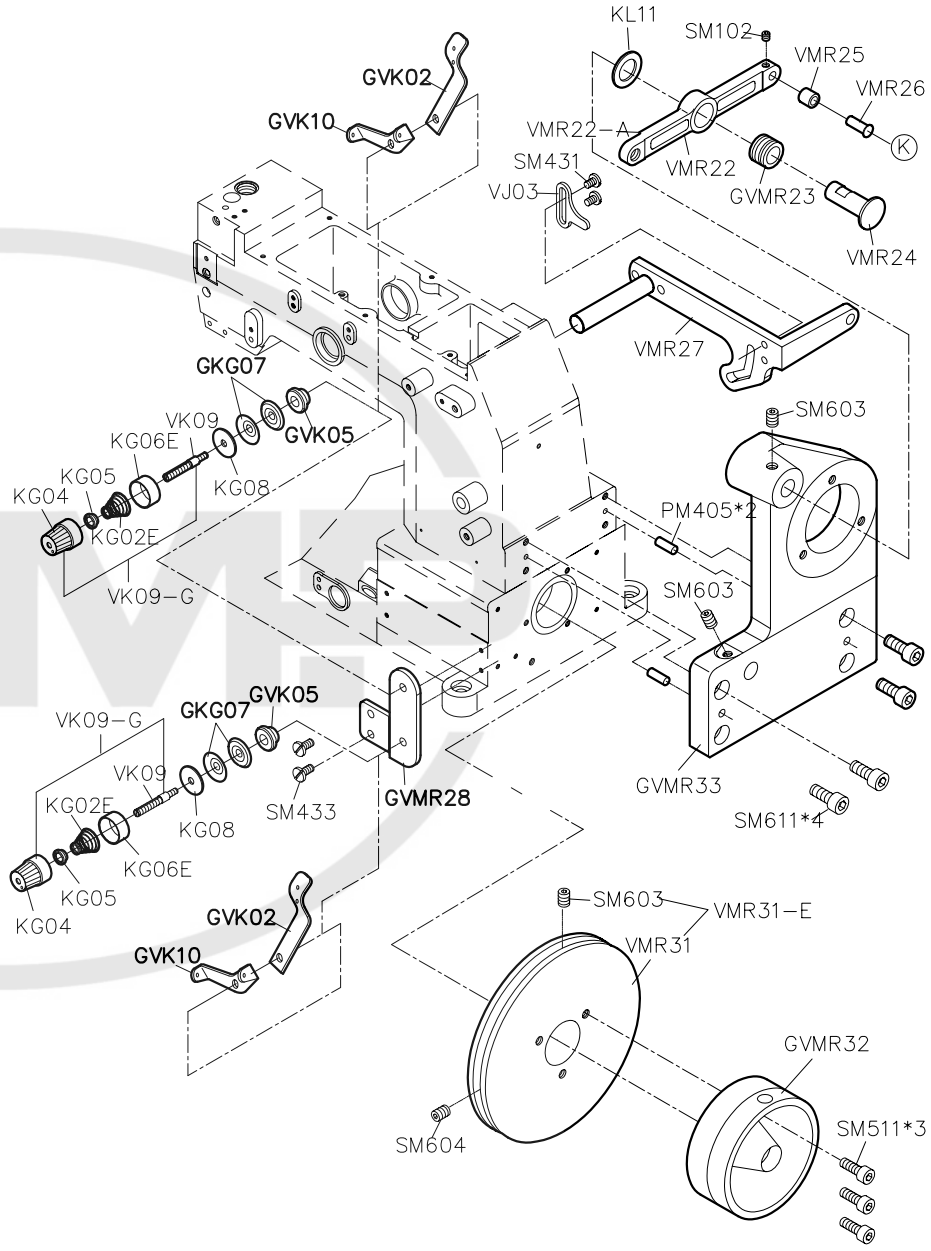

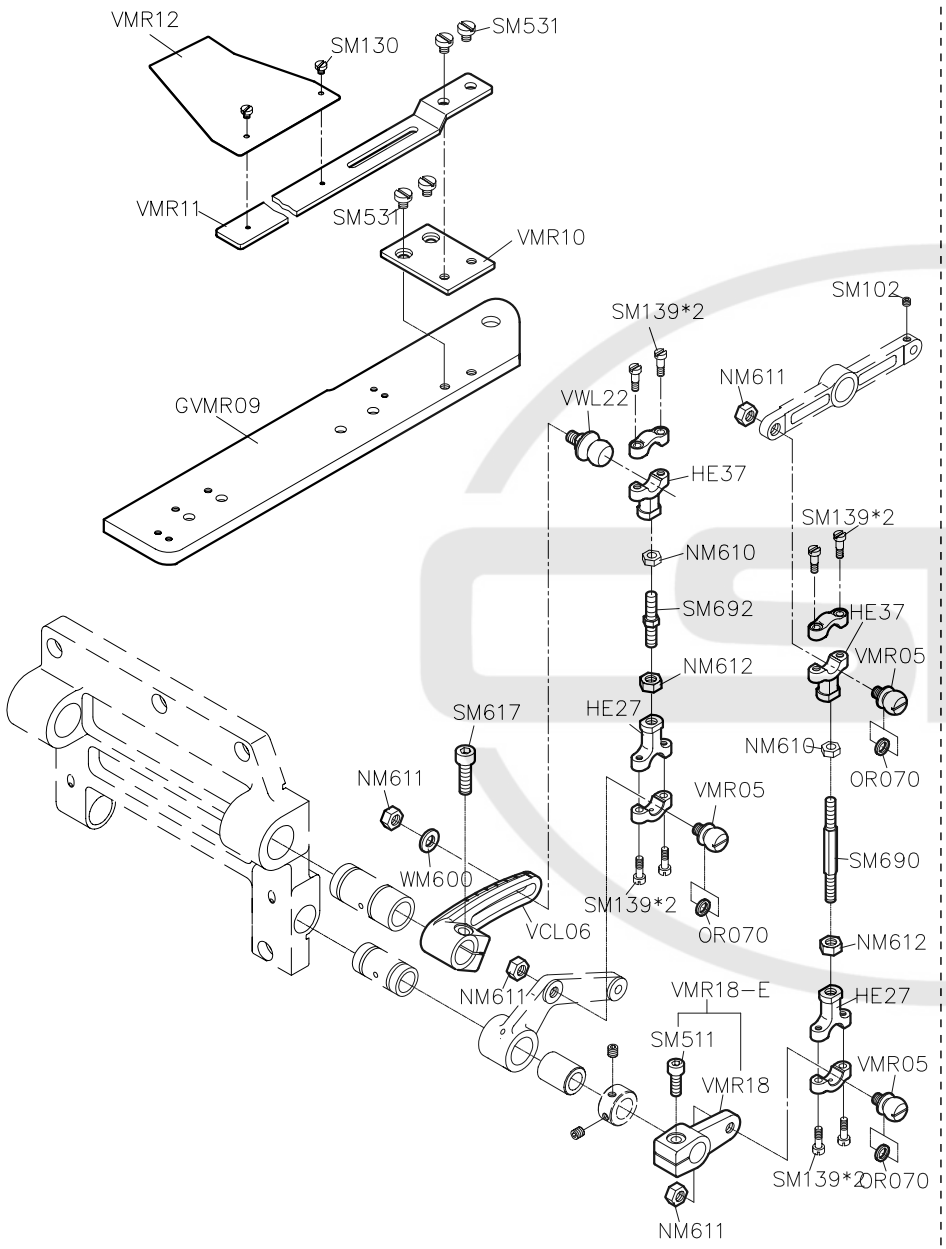

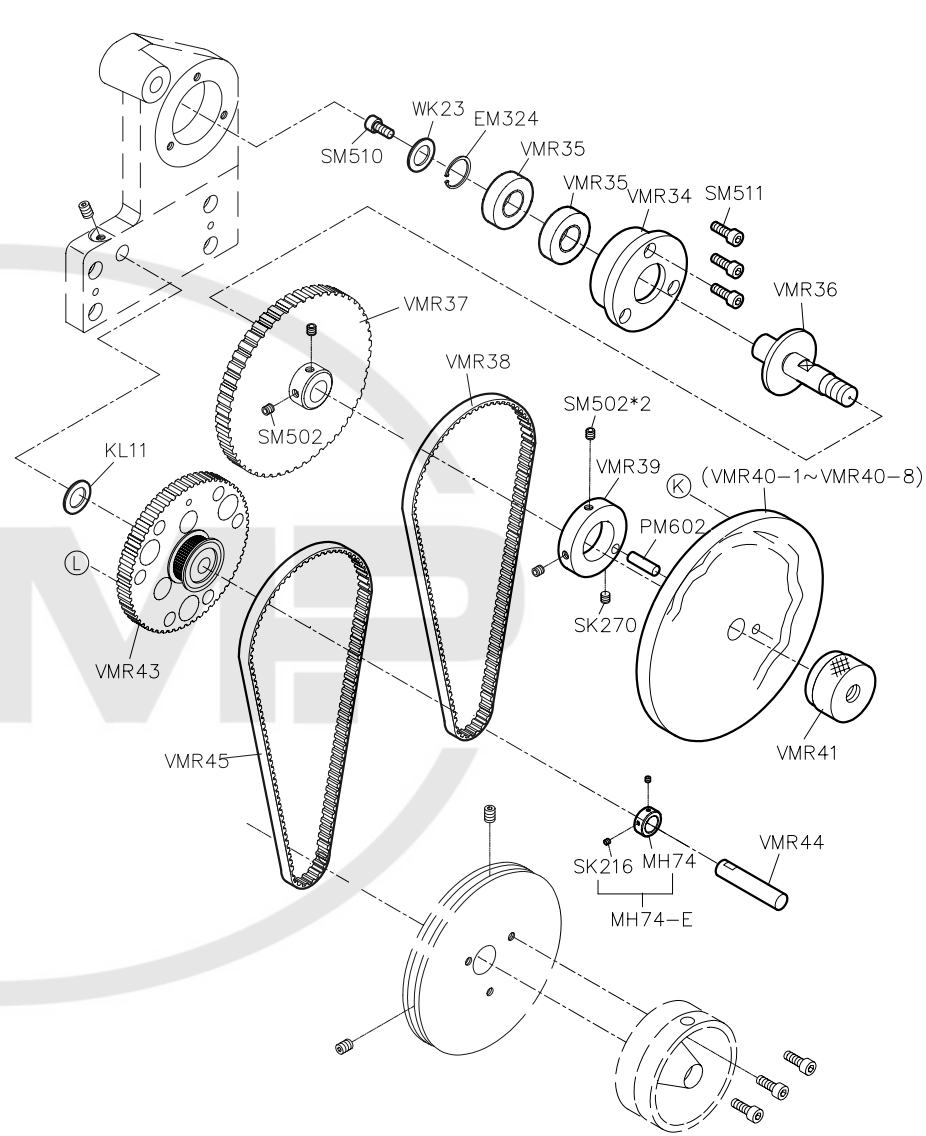

PARTS LIST FOR VMR (4) GROUP

PARTS LIST FOR VMR (5) GROUP

PARTS LIST FOR VPL GROUP

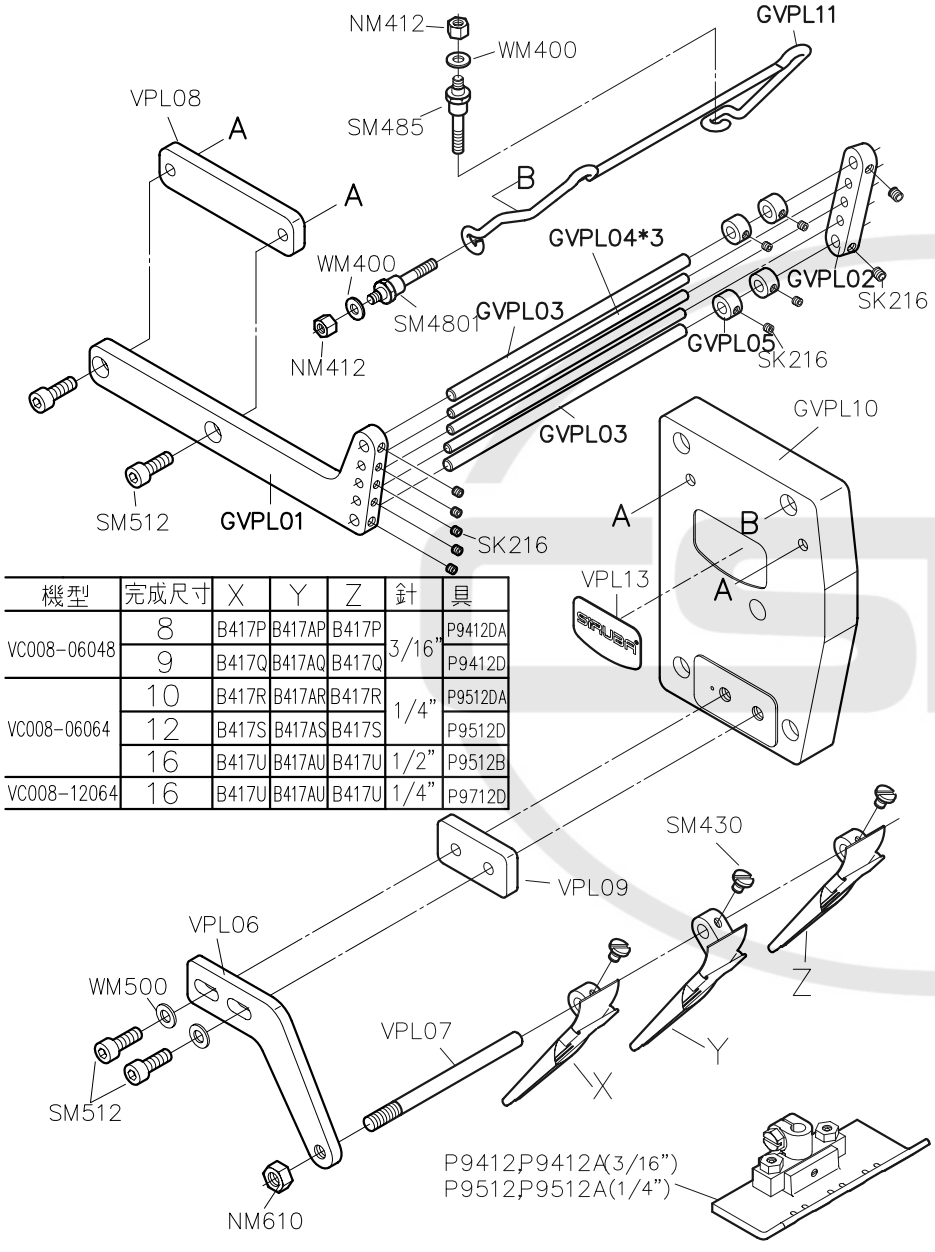

機型	完成尺寸	X	Y	Z	針	具
VC008-06048	8	B417P	B417AP	B417P	3/16"	P9412DA
	9	B417Q	B417AQ	B417Q		P9412D
VC008-06064	10	B417R	B417AR	B417R	1/4"	P9512DA
	12	B417S	B417AS	B417S		P9512D
	16	B417U	B417AU	B417U	1/2"	P9512B
VC008-12064	16	B417U	B417AU	B417U	1/4"	P9712D

PARTS LIST FOR VPQ GROUP

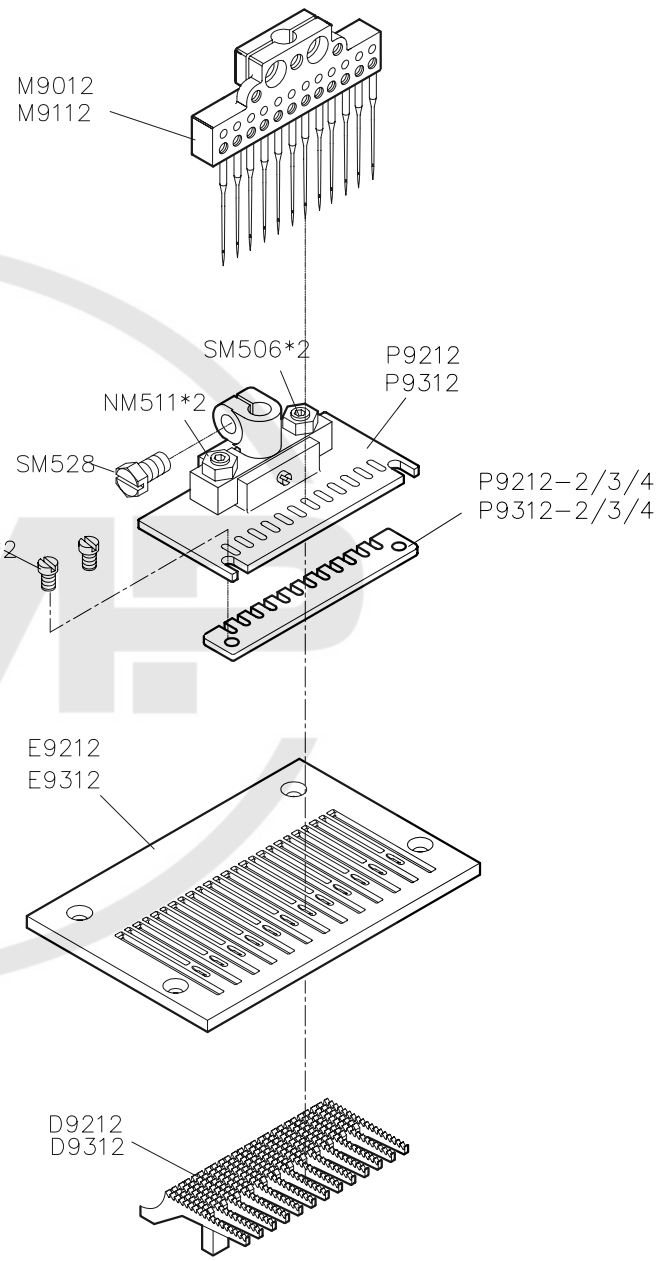

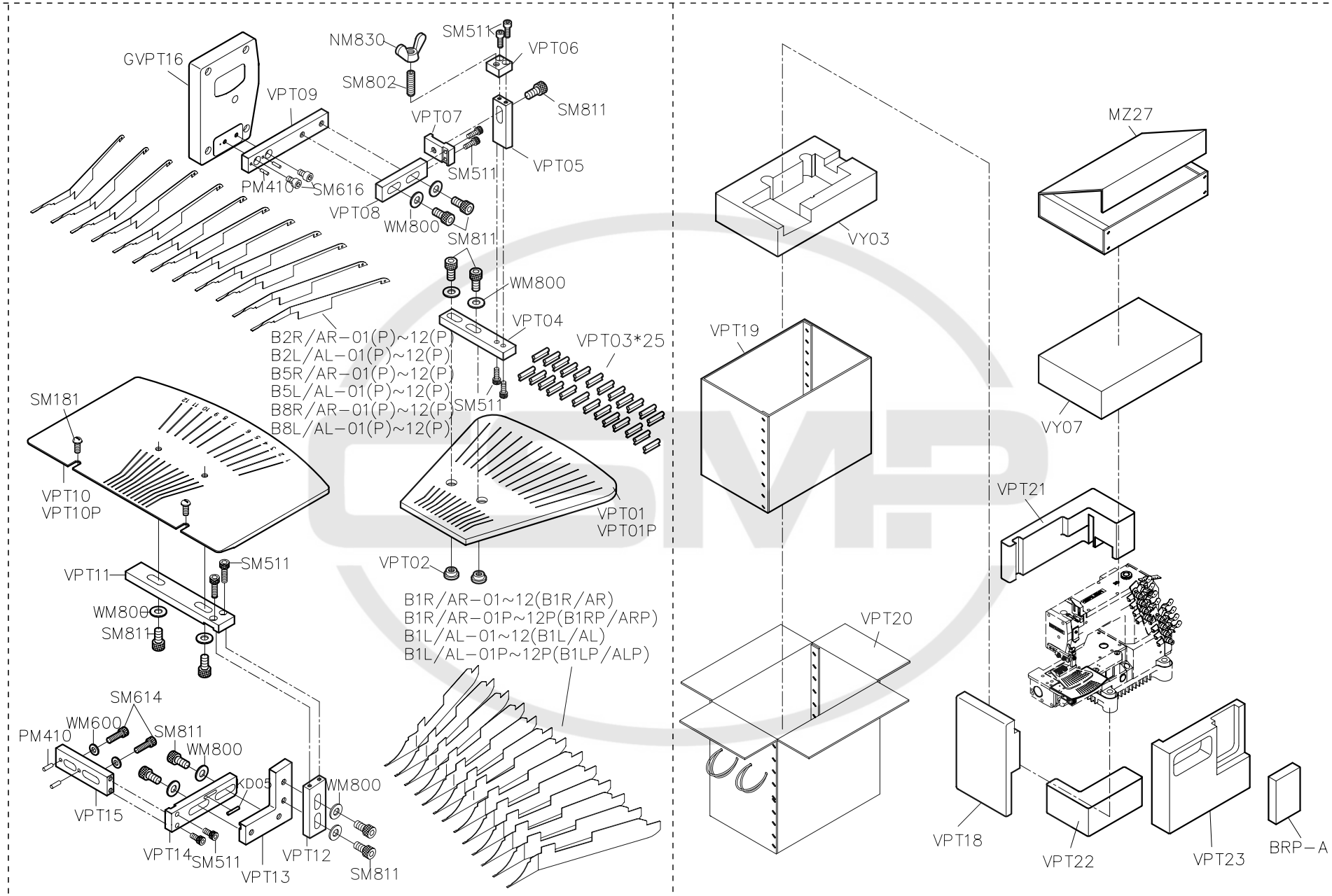

PARTS LIST FOR VPT (1) GROUP

PARTS LIST FOR VPT (2) GROUP

PARTS LIST FOR VSF GROUP

規格	成品 FINISHED SIZE	入布尺寸 TAPE SIZE	針距 NEEDLE LENGTH	機種 MODEL
B529	1 3/8"	2 3/8"	1/4–3/4–1/4	0464–191
B529P	1 1/2"	2 1/2"	3/16–1–3/16	0448–254
B529Q	1 5/8"	2 5/8"	1/4–1–1/4	0464–254

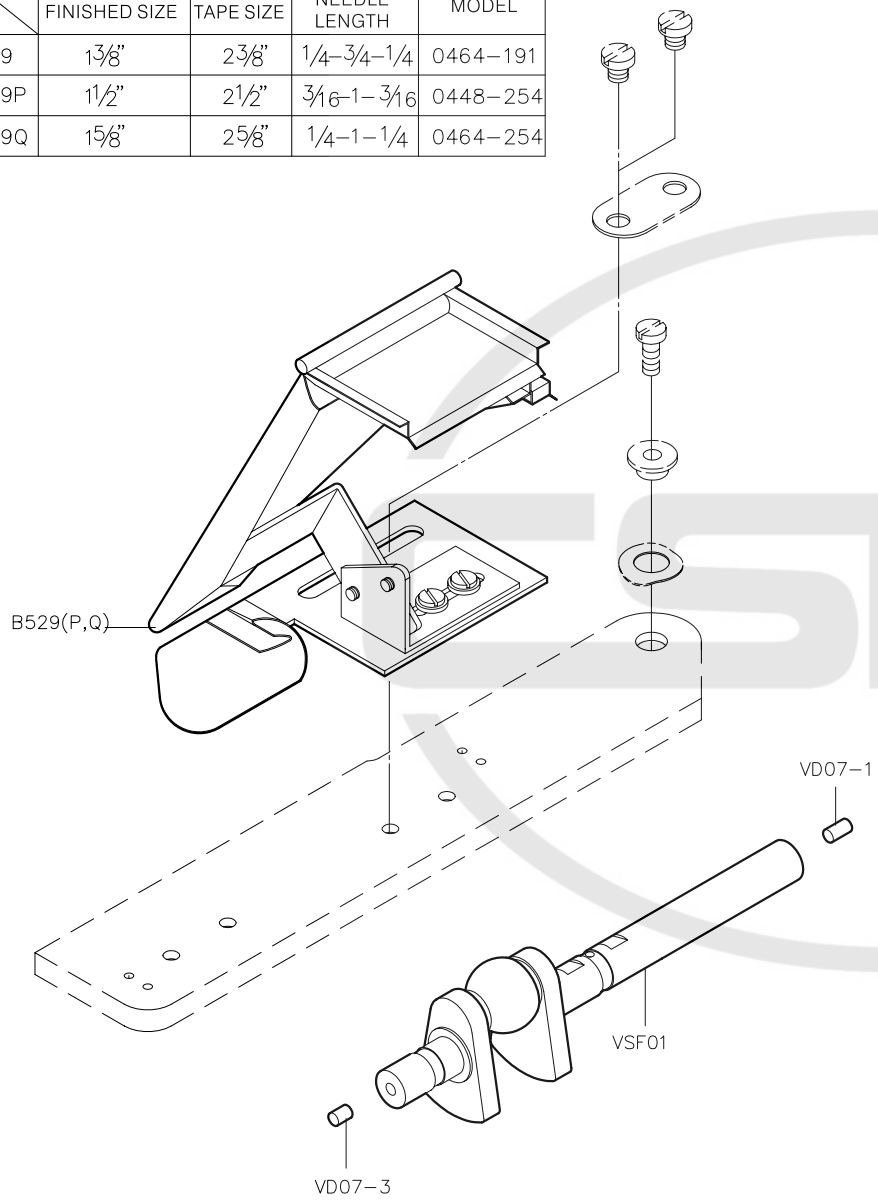

PARTS LIST FOR VSM GROUP

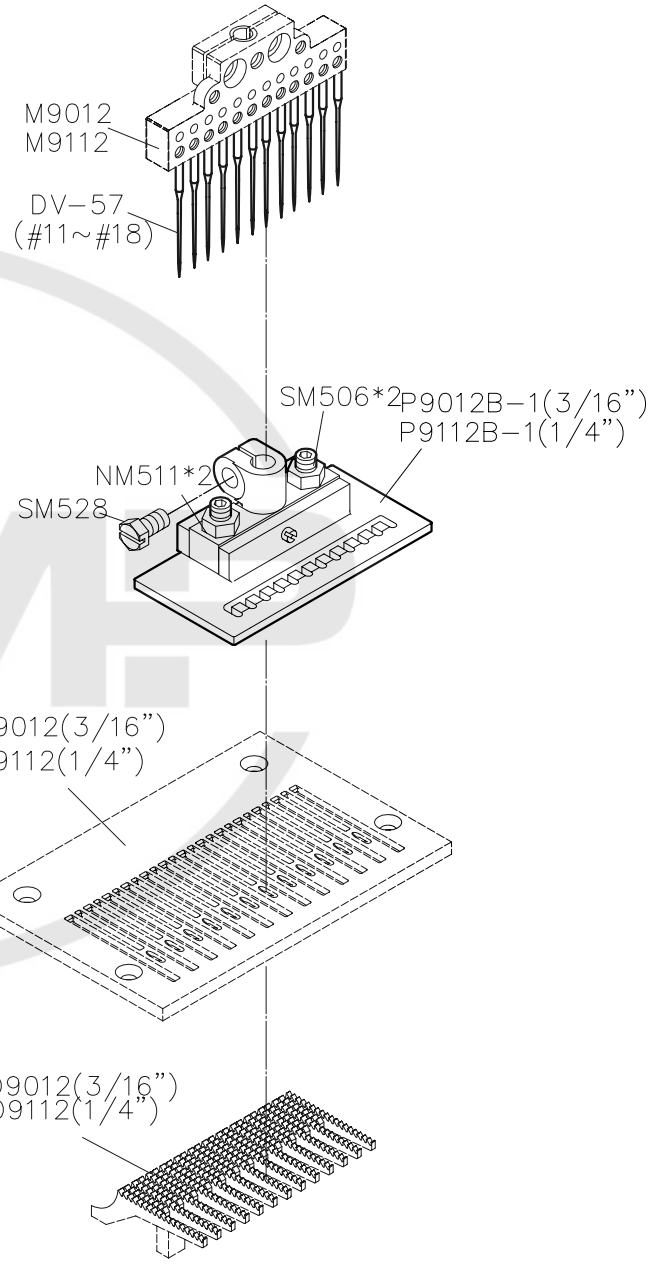

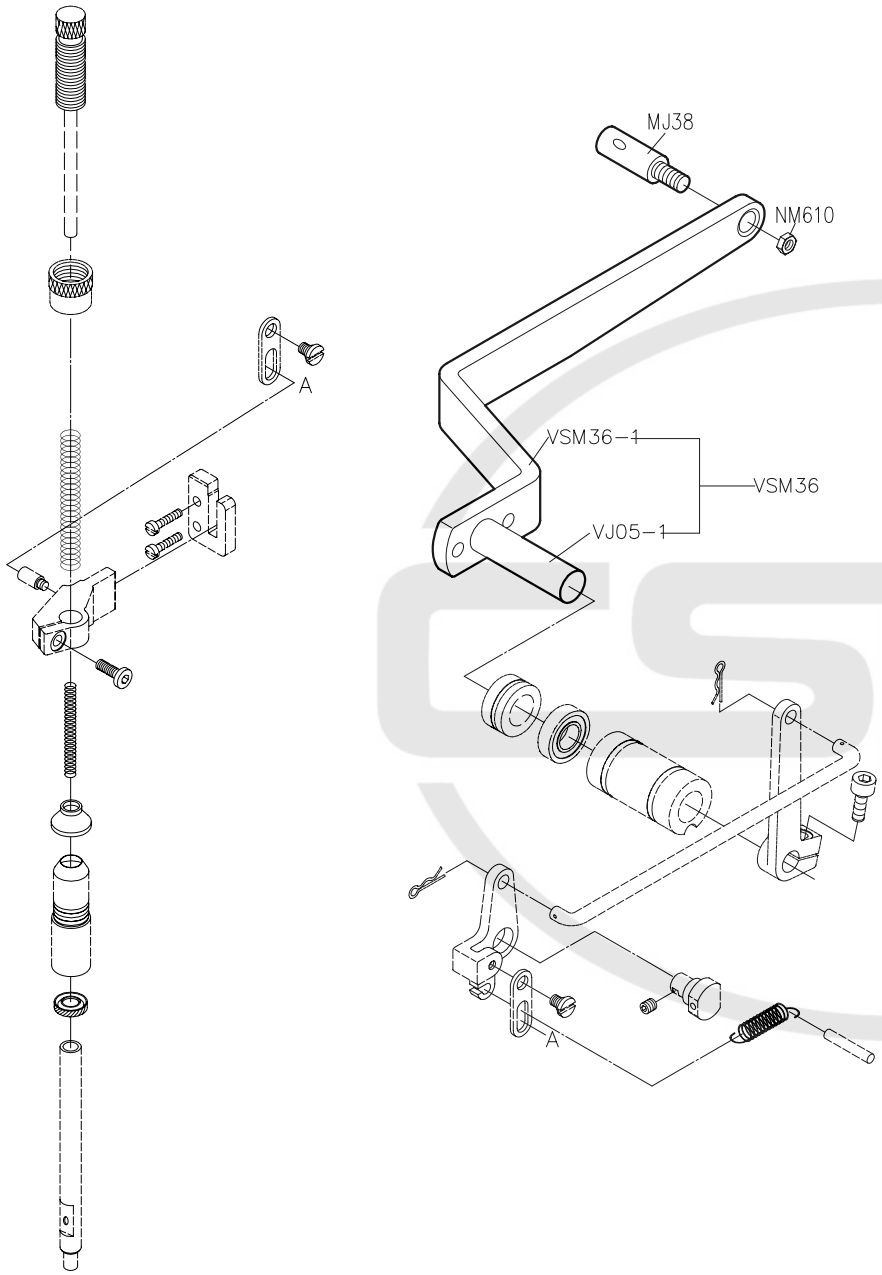

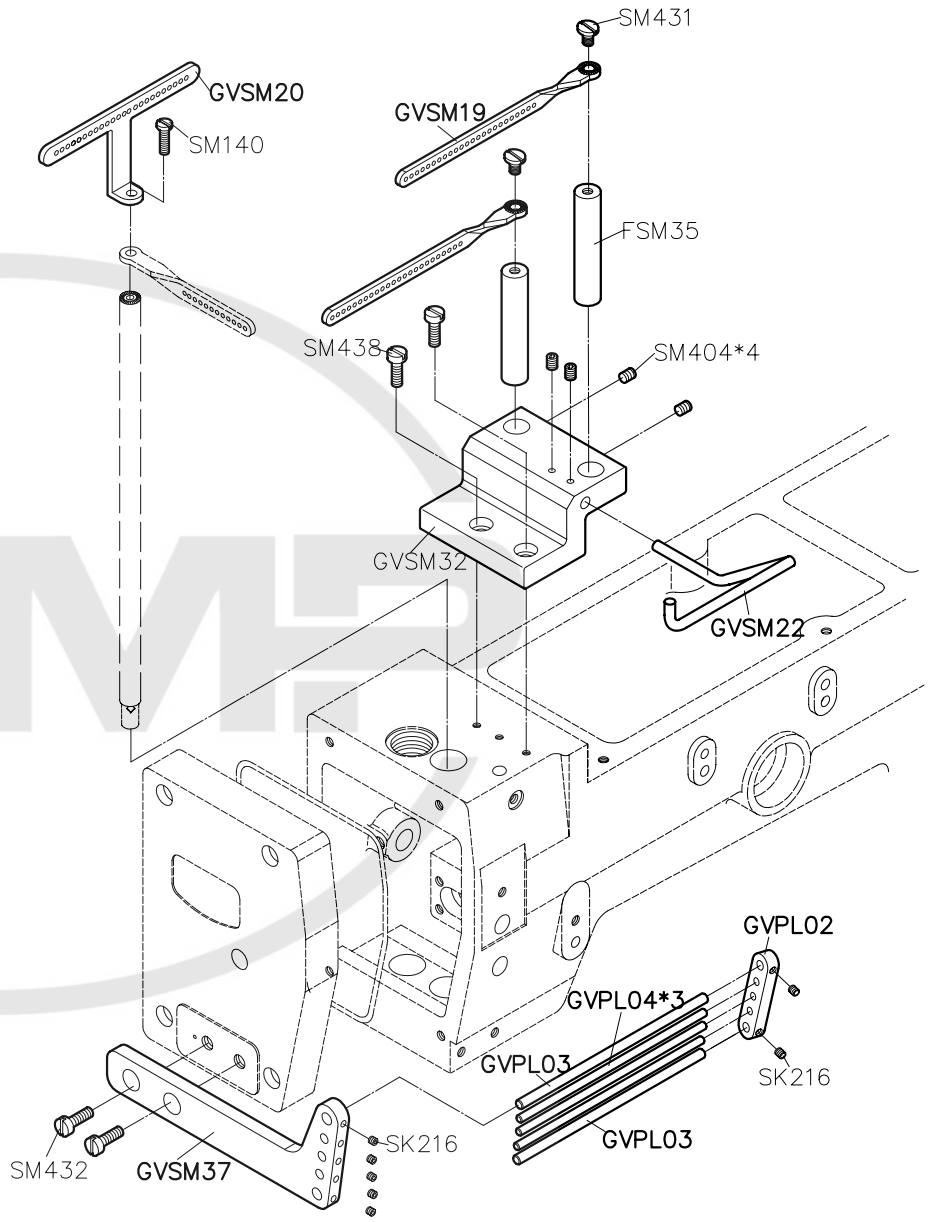

PARTS LIST FOR VSM/VSQ (1) GROUP

PARTS LIST FOR VSM/VSQ (2) GROUP

PARTS LIST FOR VSM/VSQ (3) GROUP

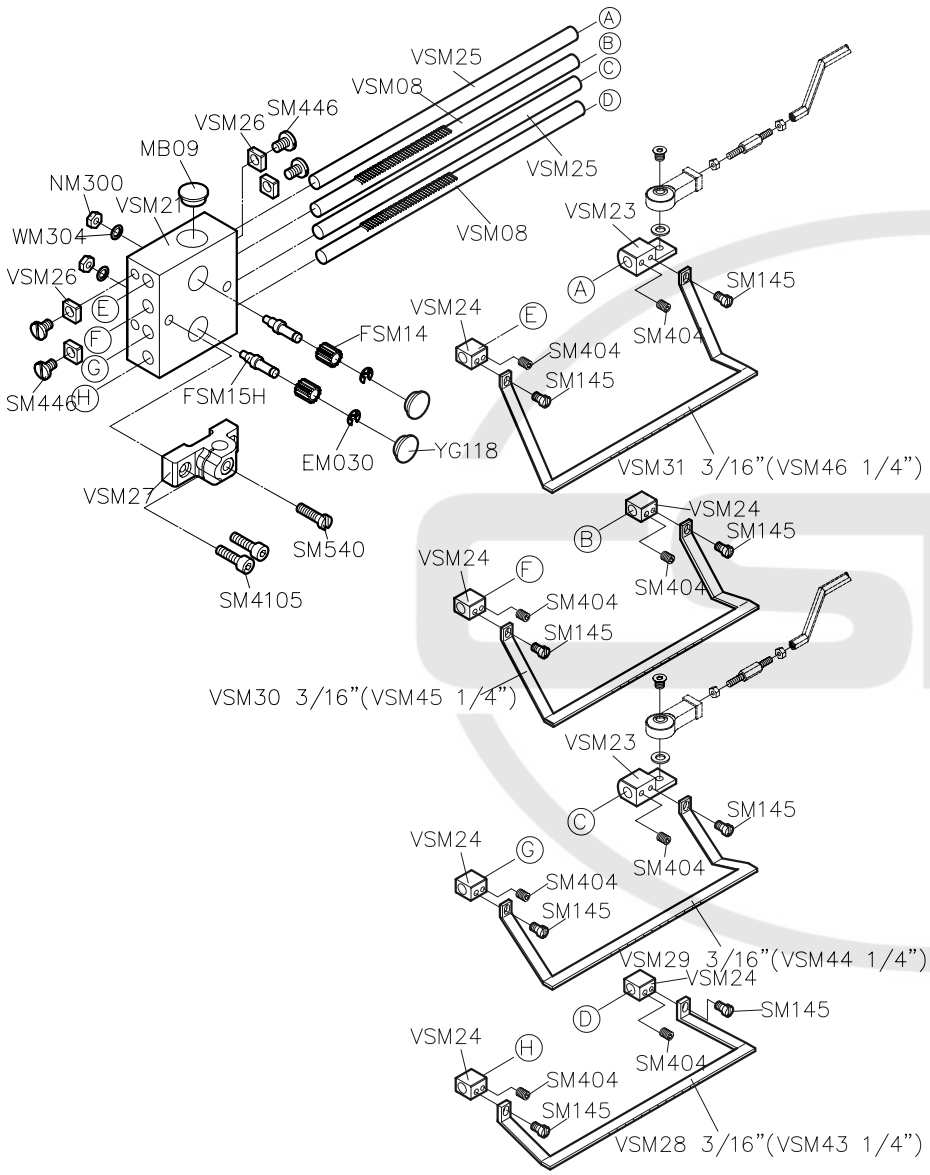

PARTS LIST FOR VSM/VSQ (4) GROUP

VSM101
VSM202
VSM211L
VSM222
VSM231L
VSM311L
VSM371L
VSM391L
VSM392L
VSM471L
VSM482L
VSM545L
VSM592L
VSM602L
VSM671L
VSM674L

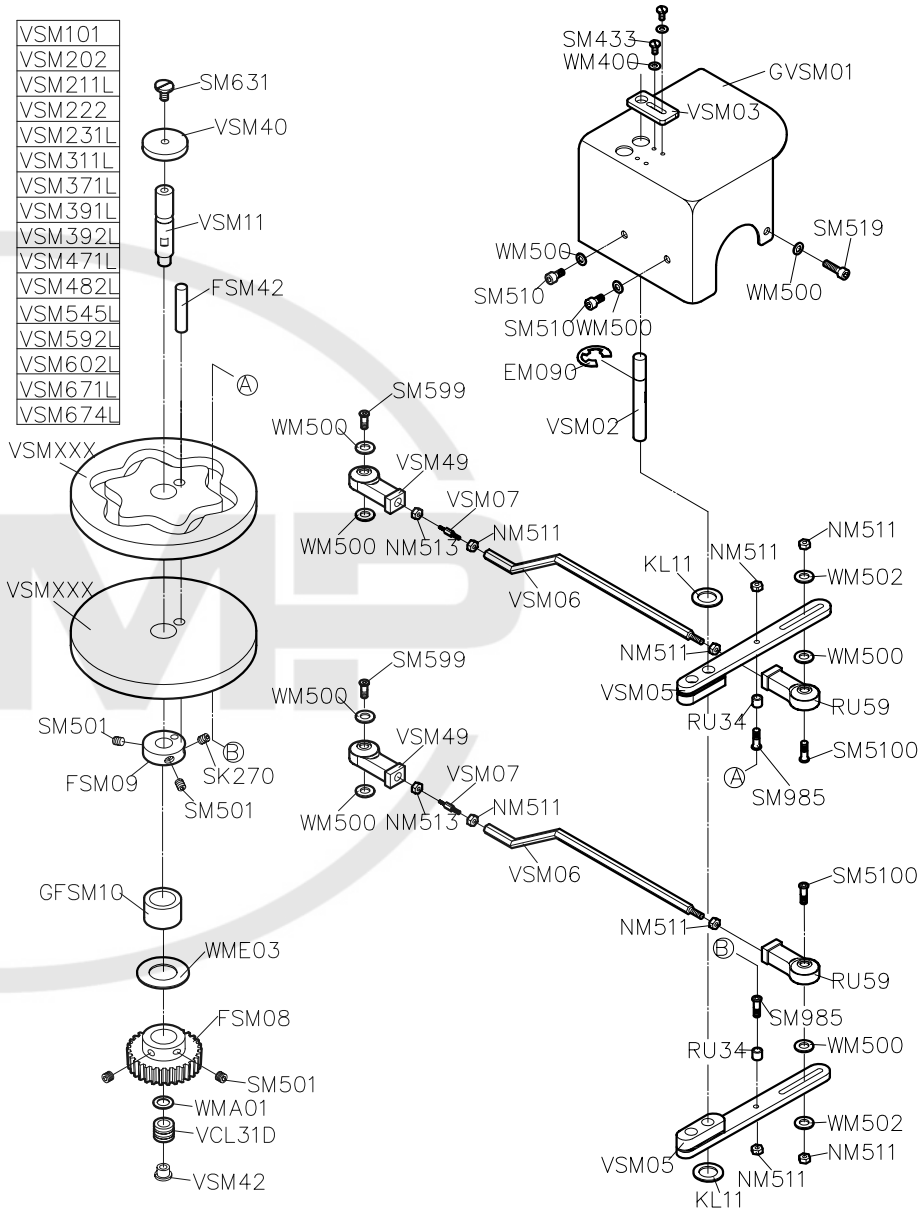

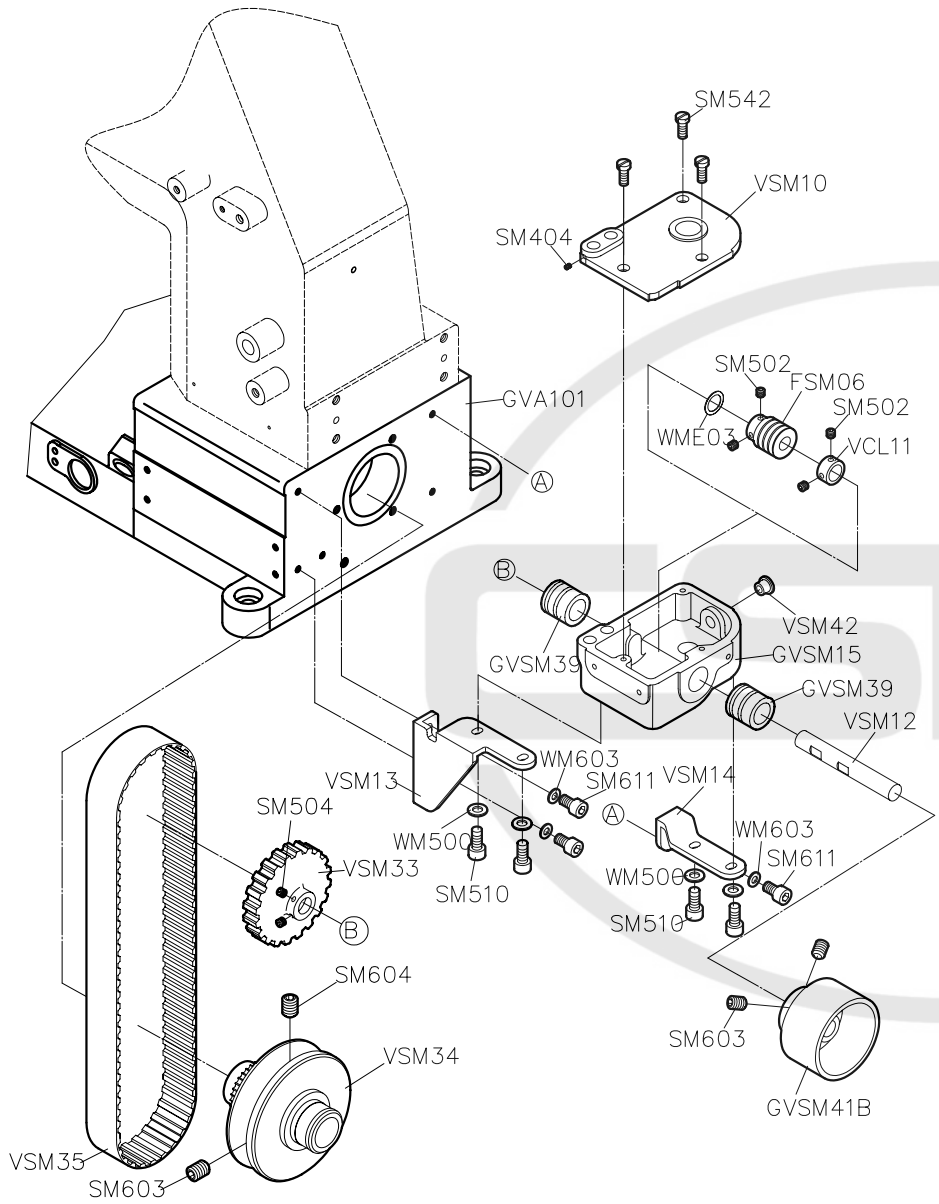

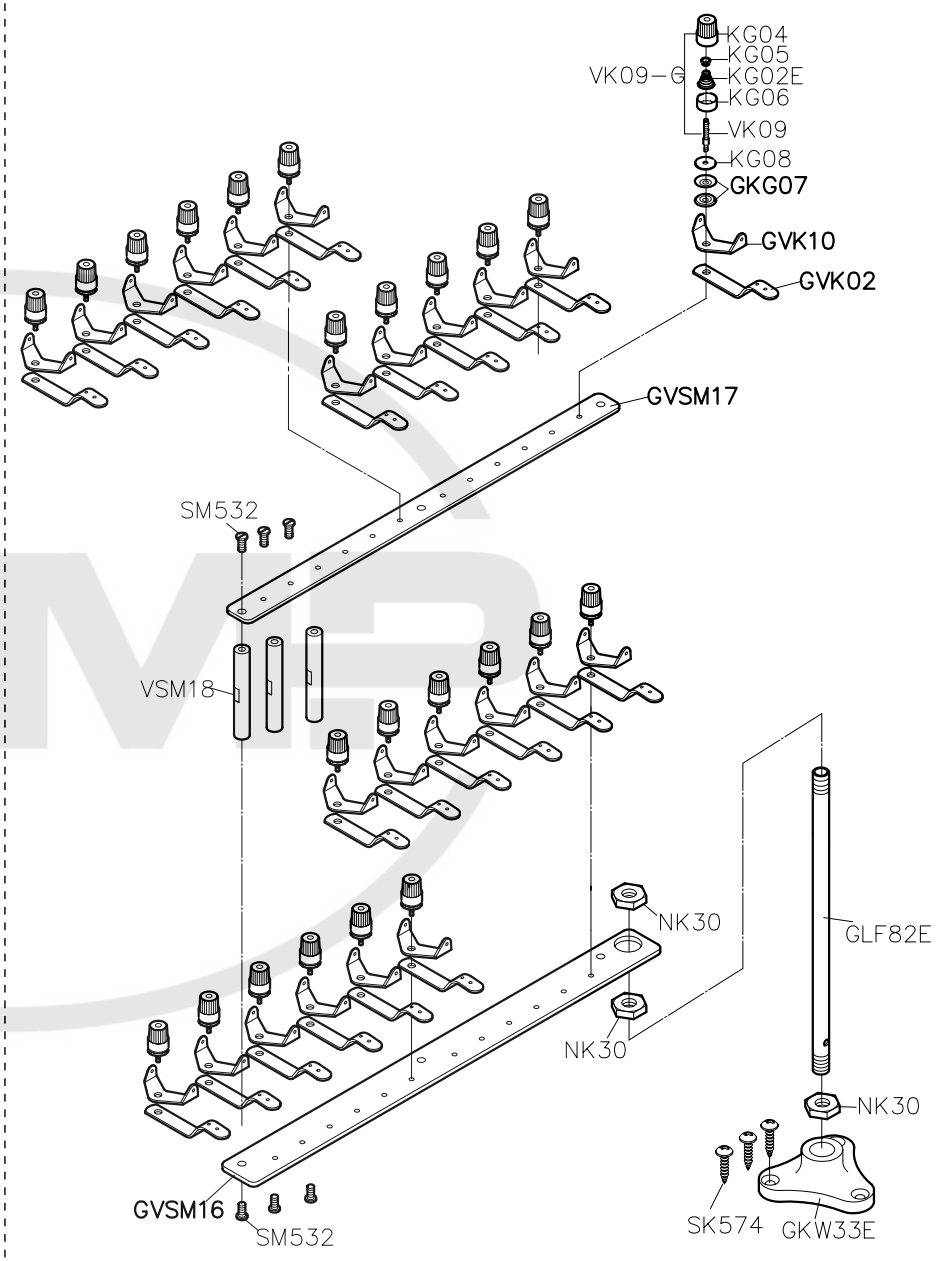

PARTS LIST FOR VSM/VSQ (5) GROUP

PARTS LIST FOR VSM/VSQ (6) GROUP

PARTS LIST FOR VSM/VSQ (7) GROUP

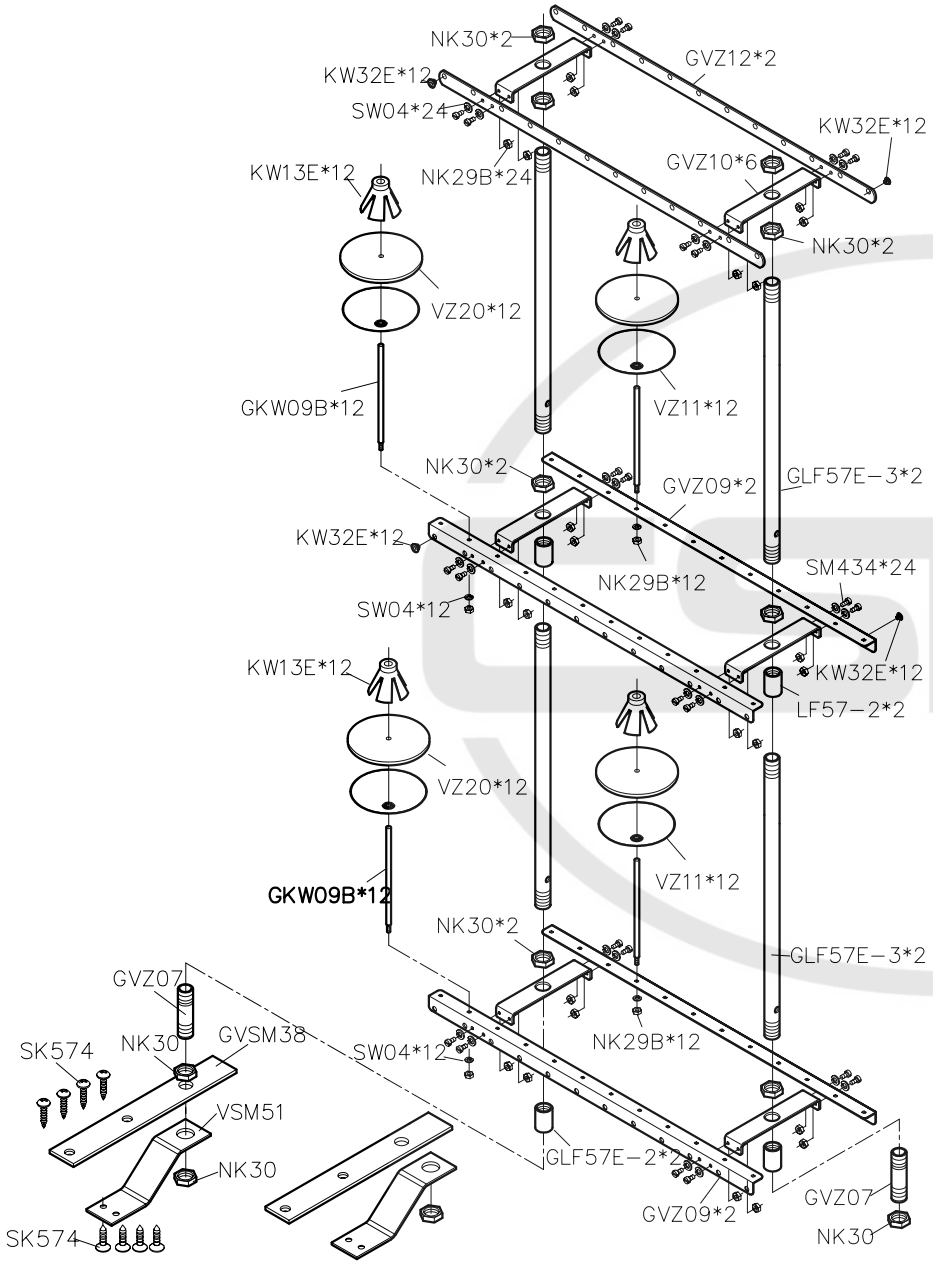

PARTS LIST FOR VSM/VSQ (8) GROUP

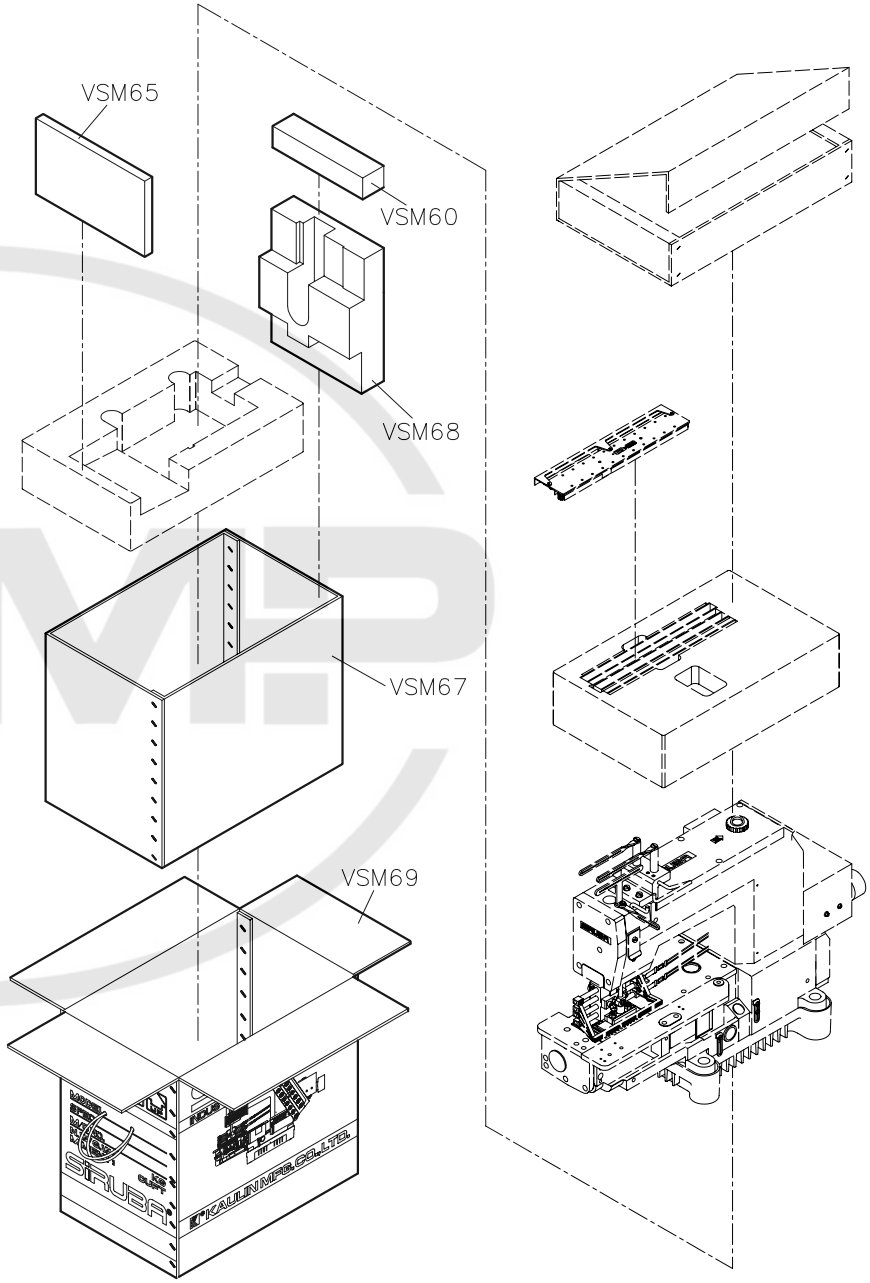

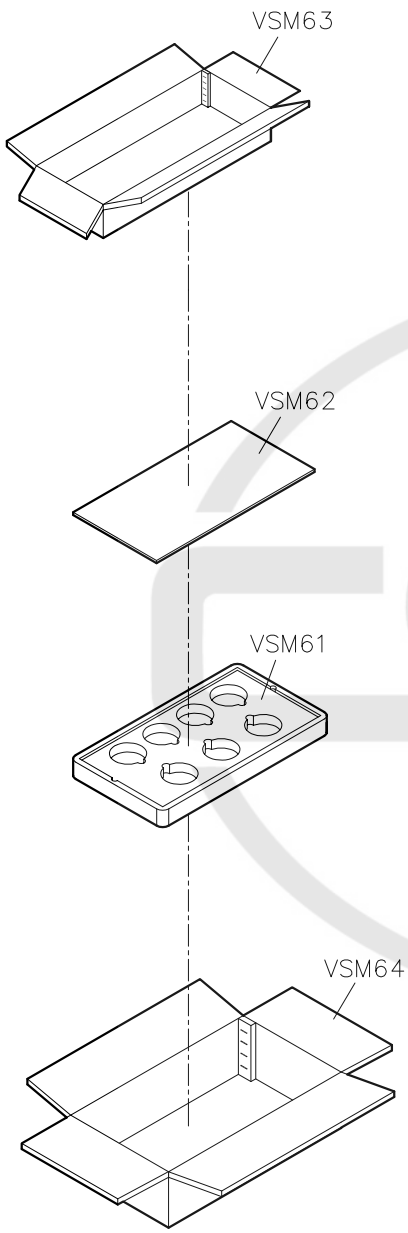

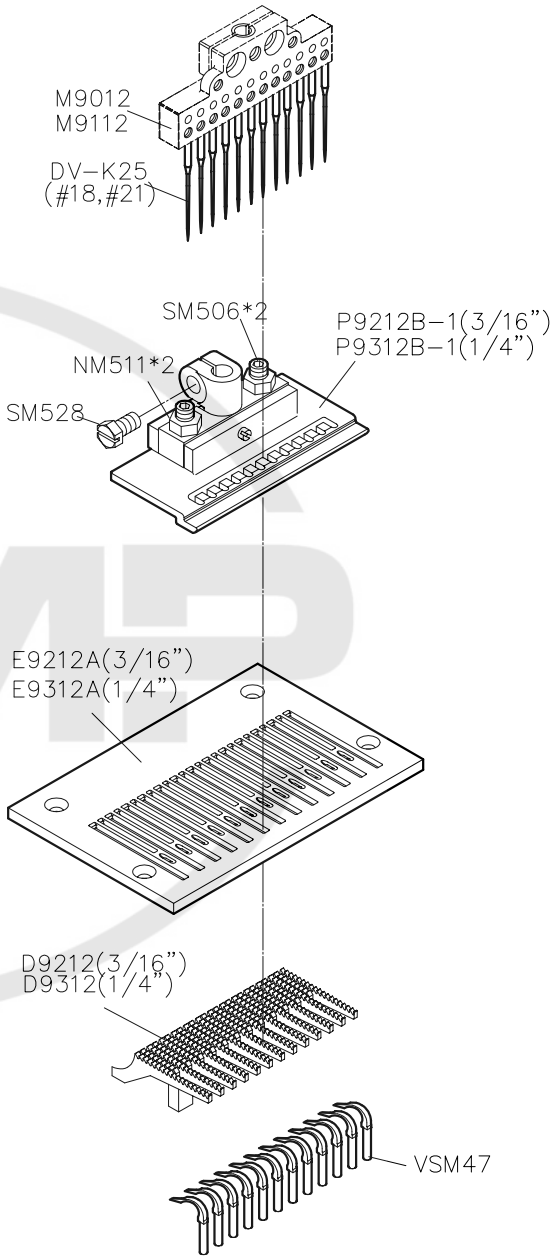

PARTS LIST FOR VSM/VSQ (9) GROUP

PARTS LIST FOR VSQ (1) GROUP

PARTS LIST FOR VSQ (2) GROUP

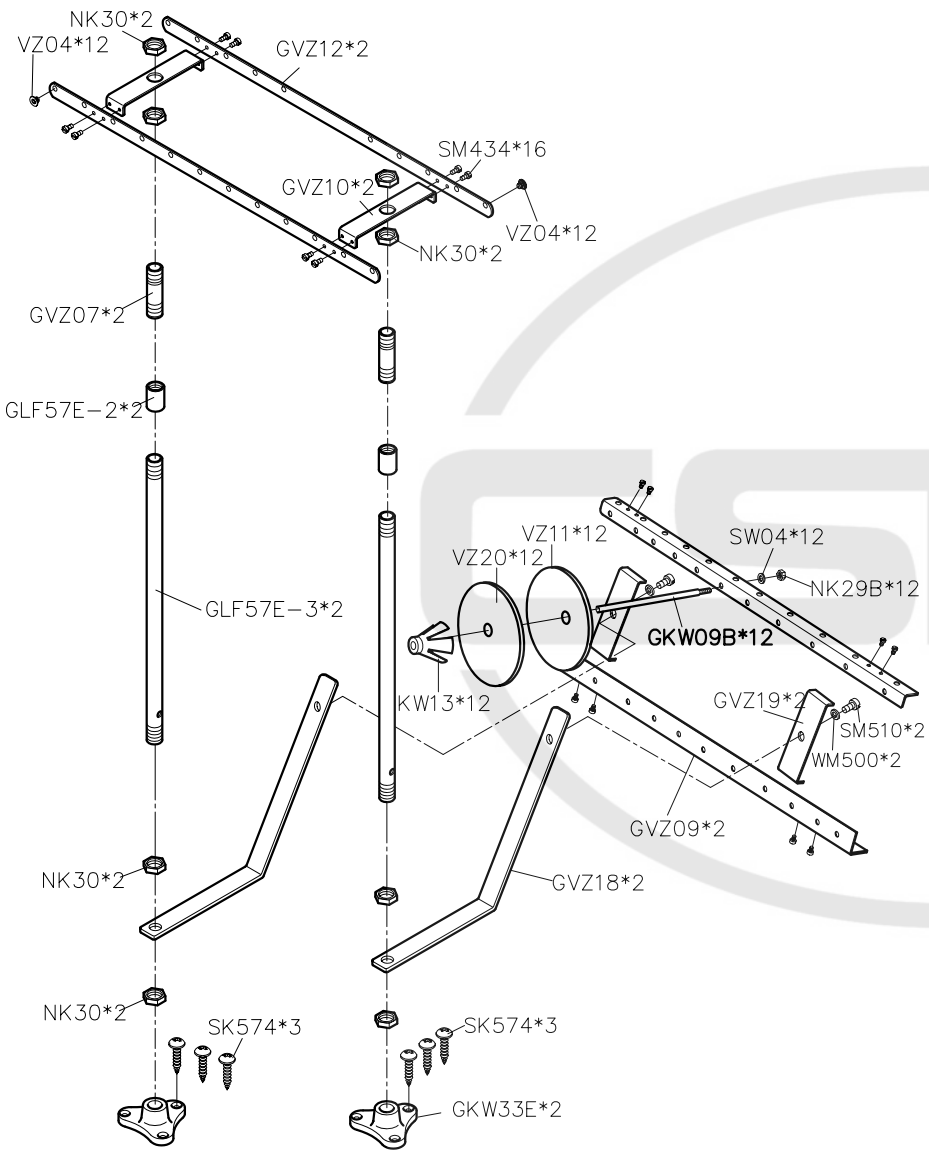

PARTS LIST FOR VTA GROUP

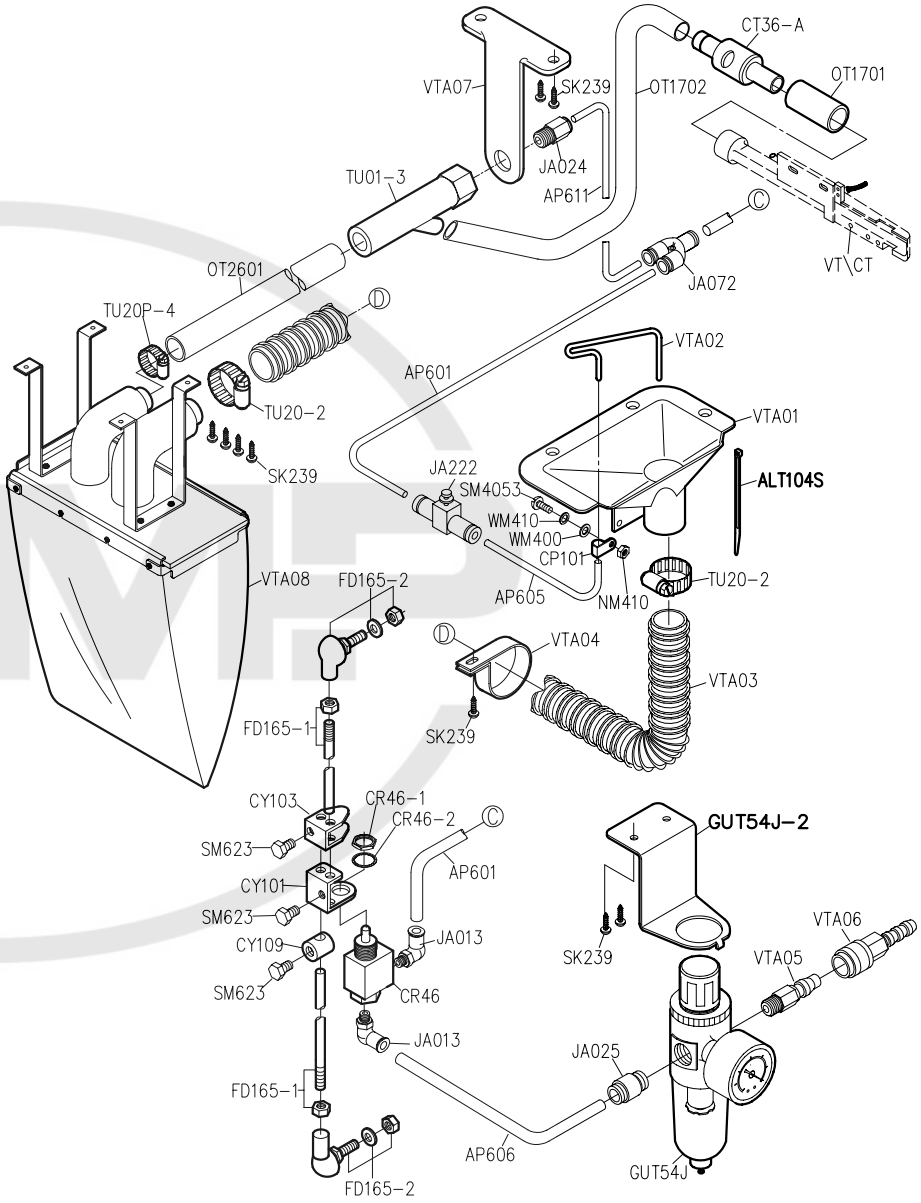

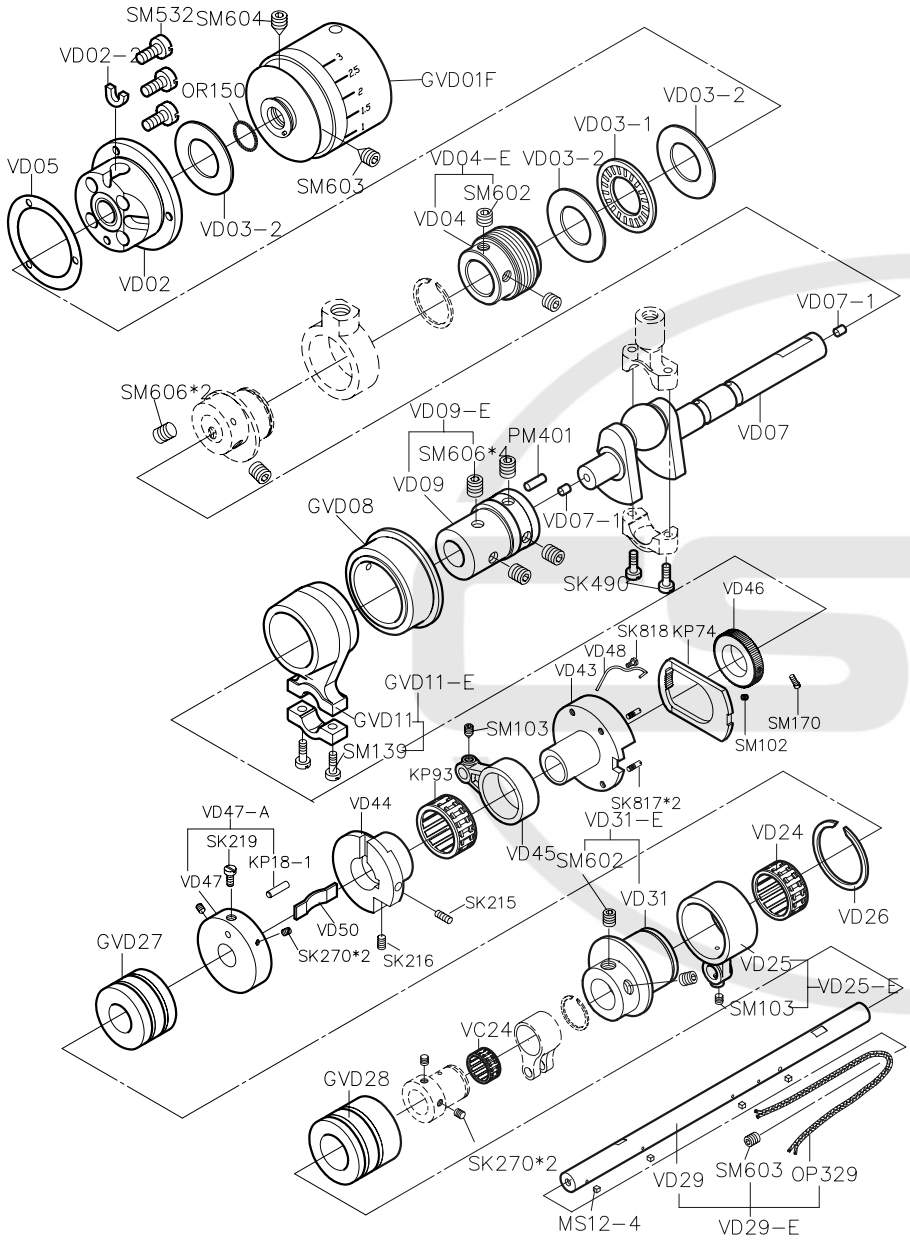

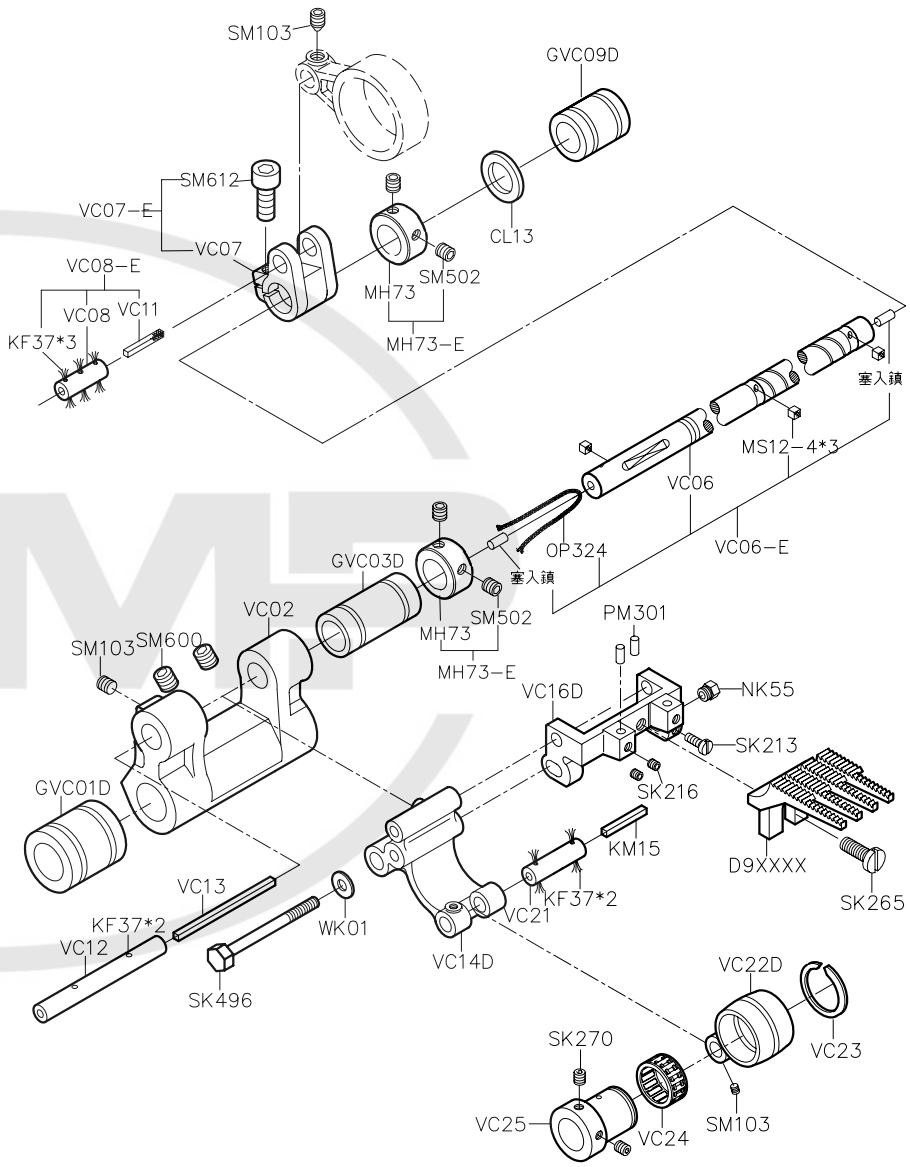

PARTS LIST FOR VUT (1) GROUP

PARTS LIST FOR VUT (2) GROUP

PARTS LIST FOR VUT (3) GROUP

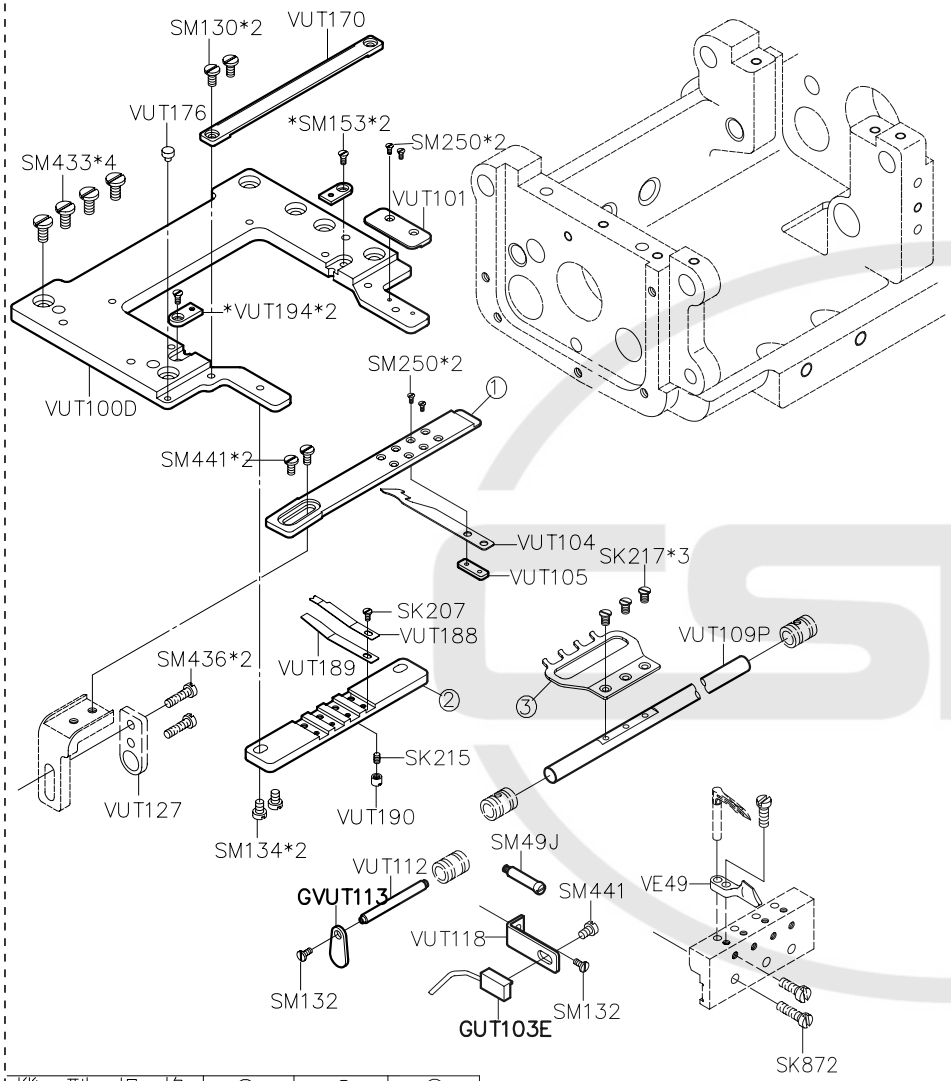

機 型 規 格		①	②	③
VC008−04	064	VUT184P	VUT187P	VUT108P
	085	VUT184Q	VUT187Q	VUT108Q
	095	VUT184P	VUT187R	VUT108R
	106	VUT184S	VUT187S	VUT108S
	127	VUT184T	VUT187T	VUT108T
VC008−06	064	VUT184V	VUT187V	VUT108V
VC008−12	050	VUT184U	VUT187U	VUT108U

PARTS LIST FOR VUT (4) GROUP

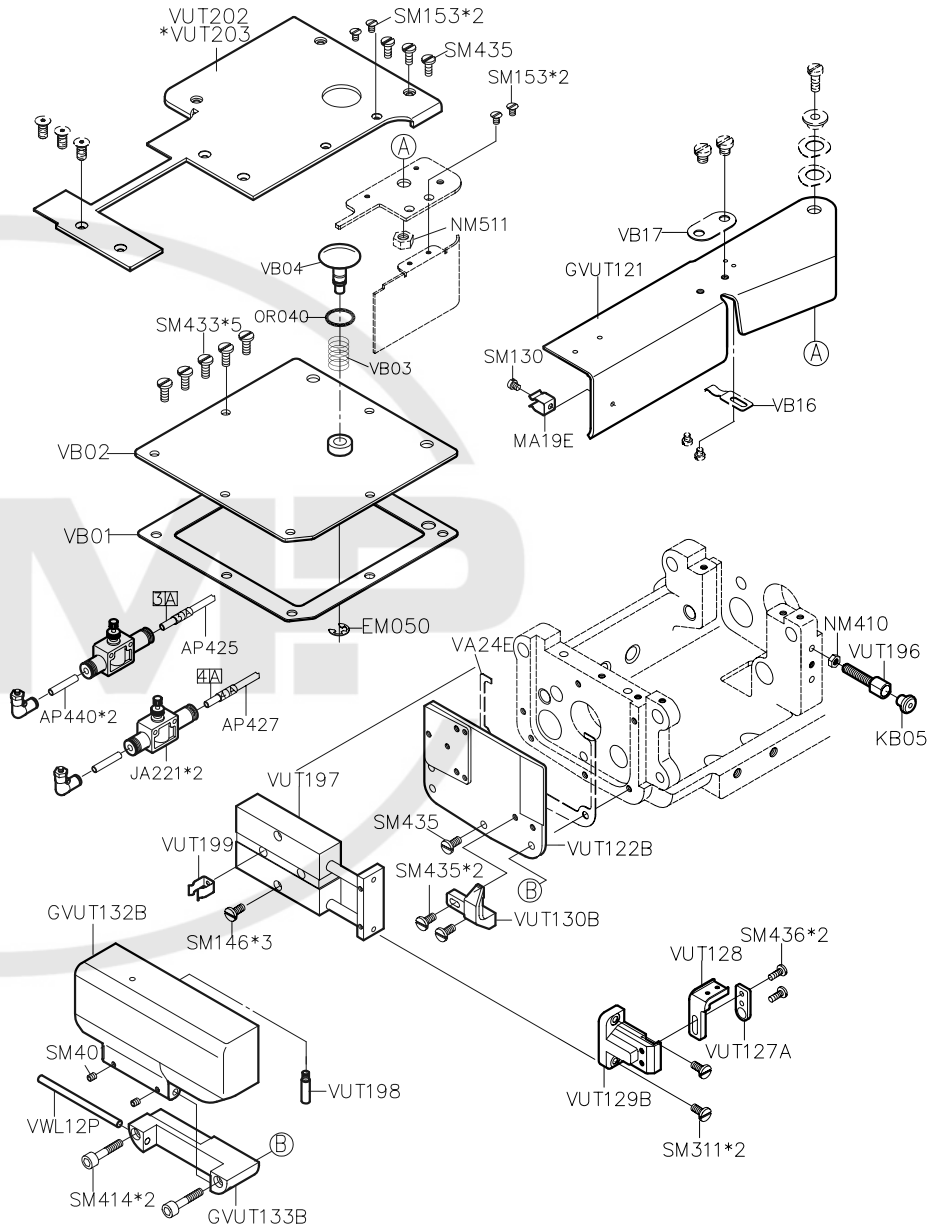

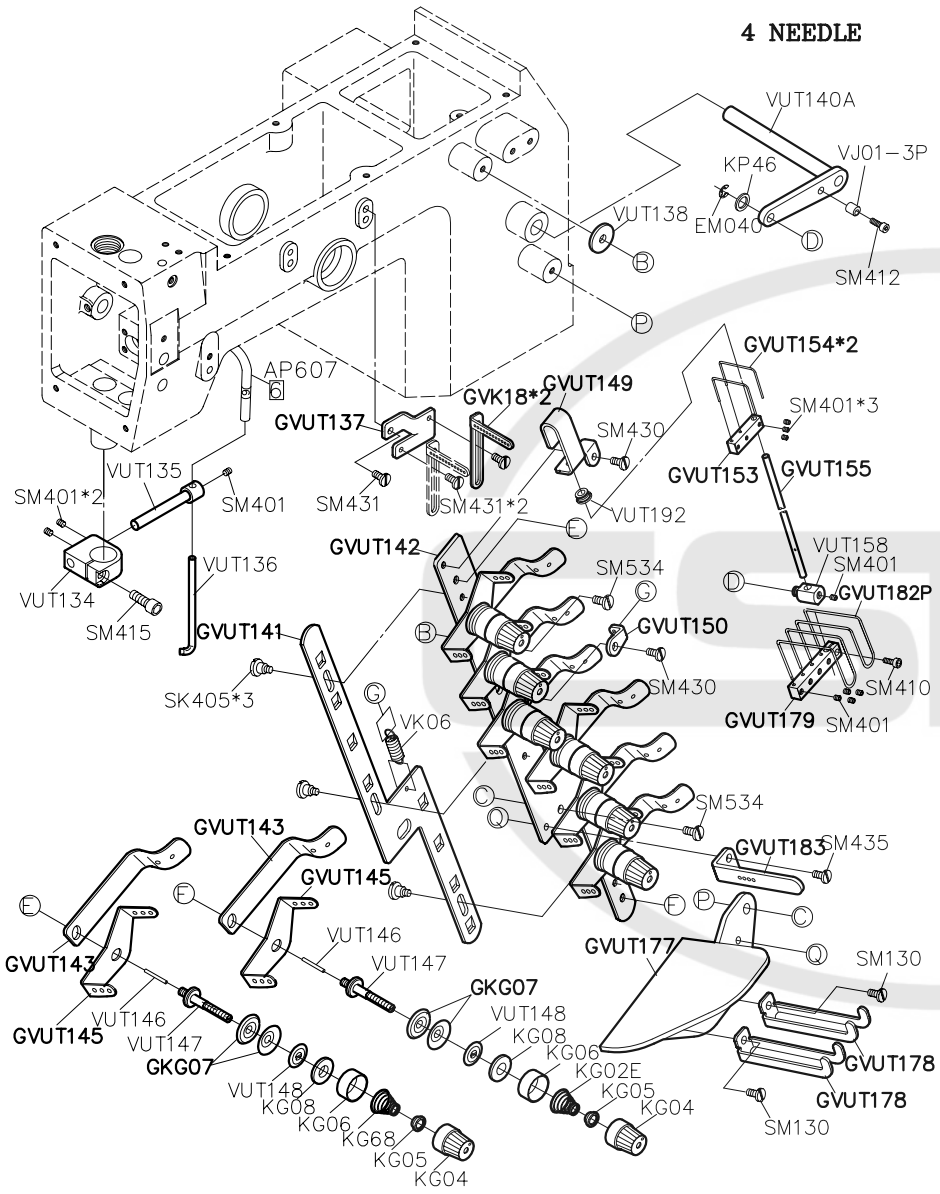

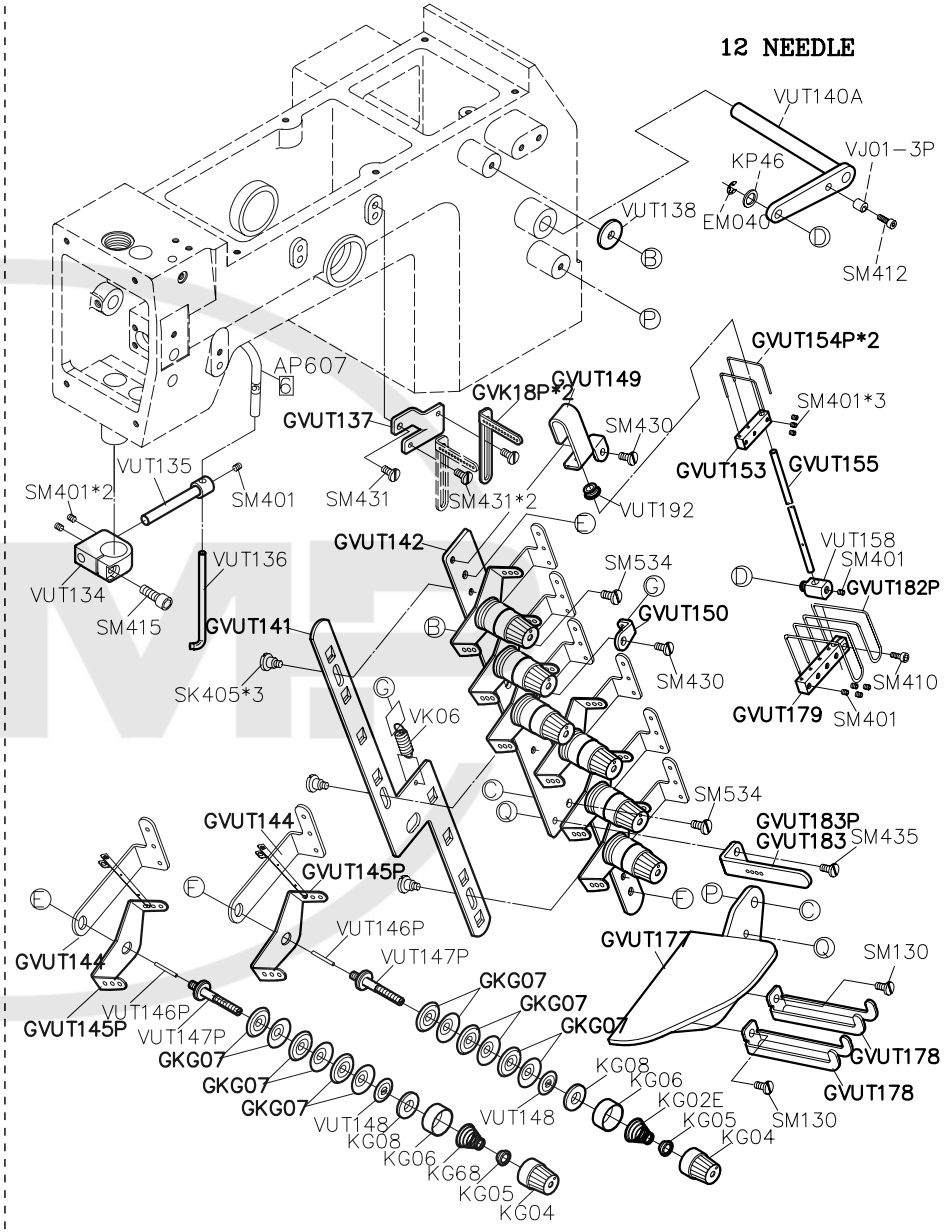

PARTS LIST FOR VUT (5) GROUP

PARTS LIST FOR VUT (6) GROUP

PARTS LIST FOR VUT (7) GROUP

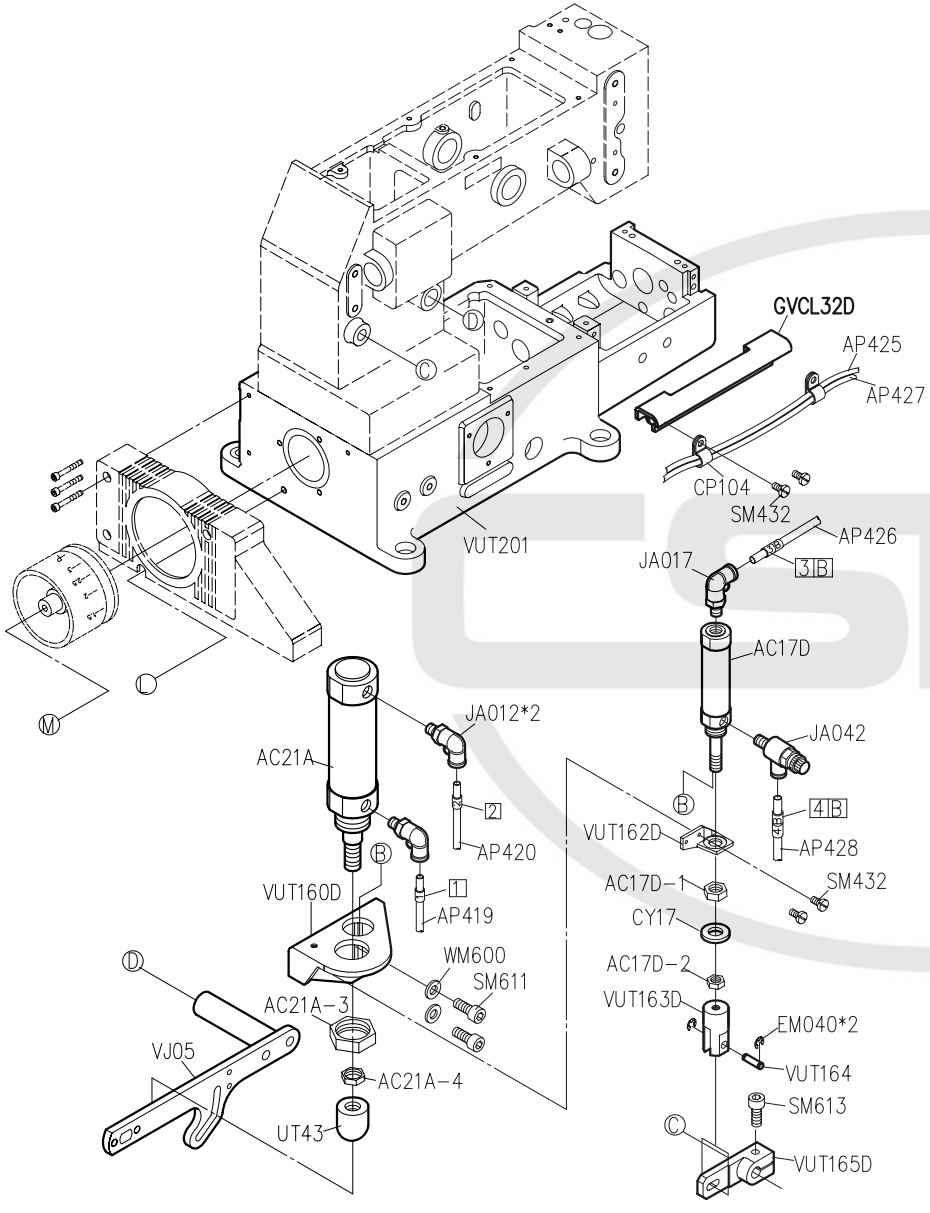

PARTS LIST FOR VUT (8) GROUP

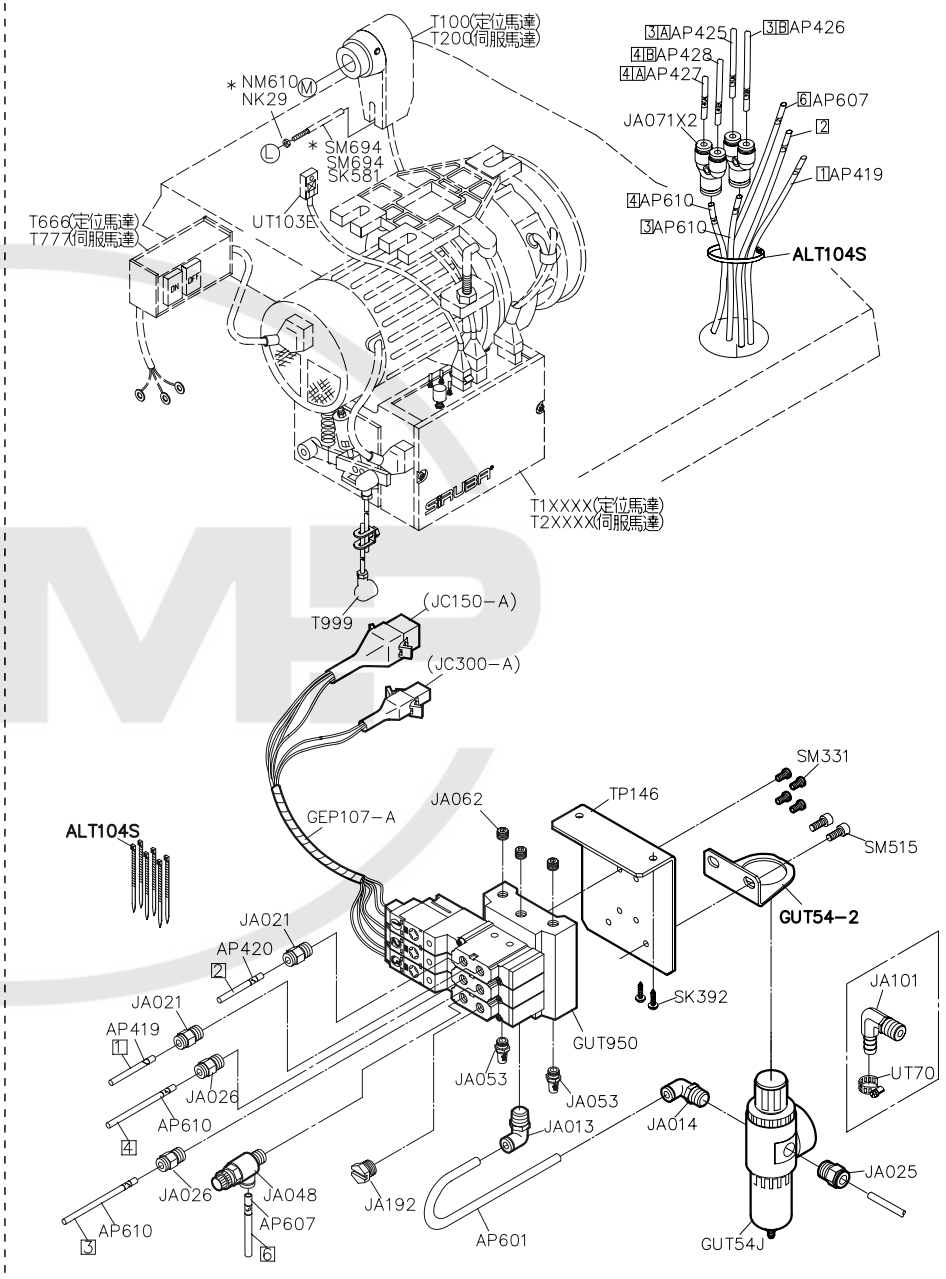

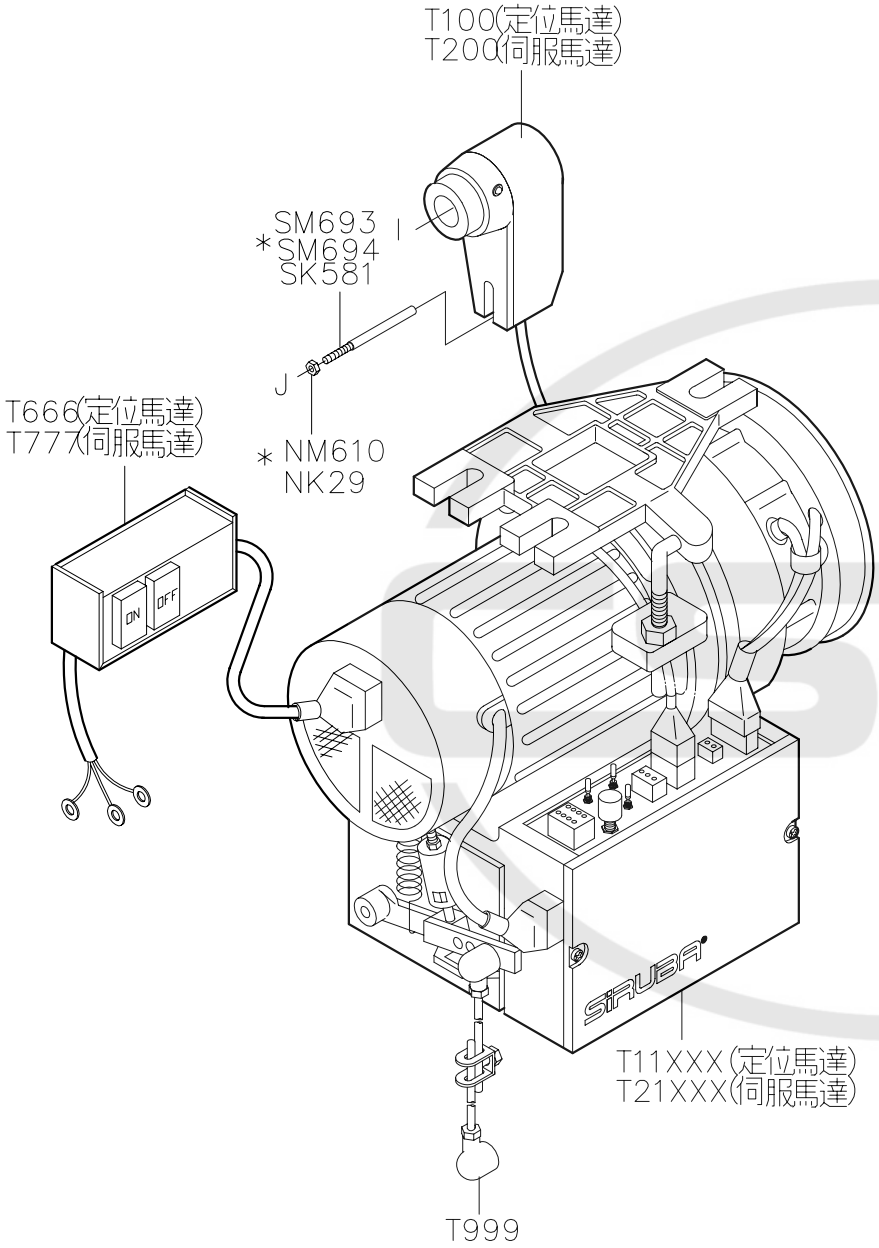

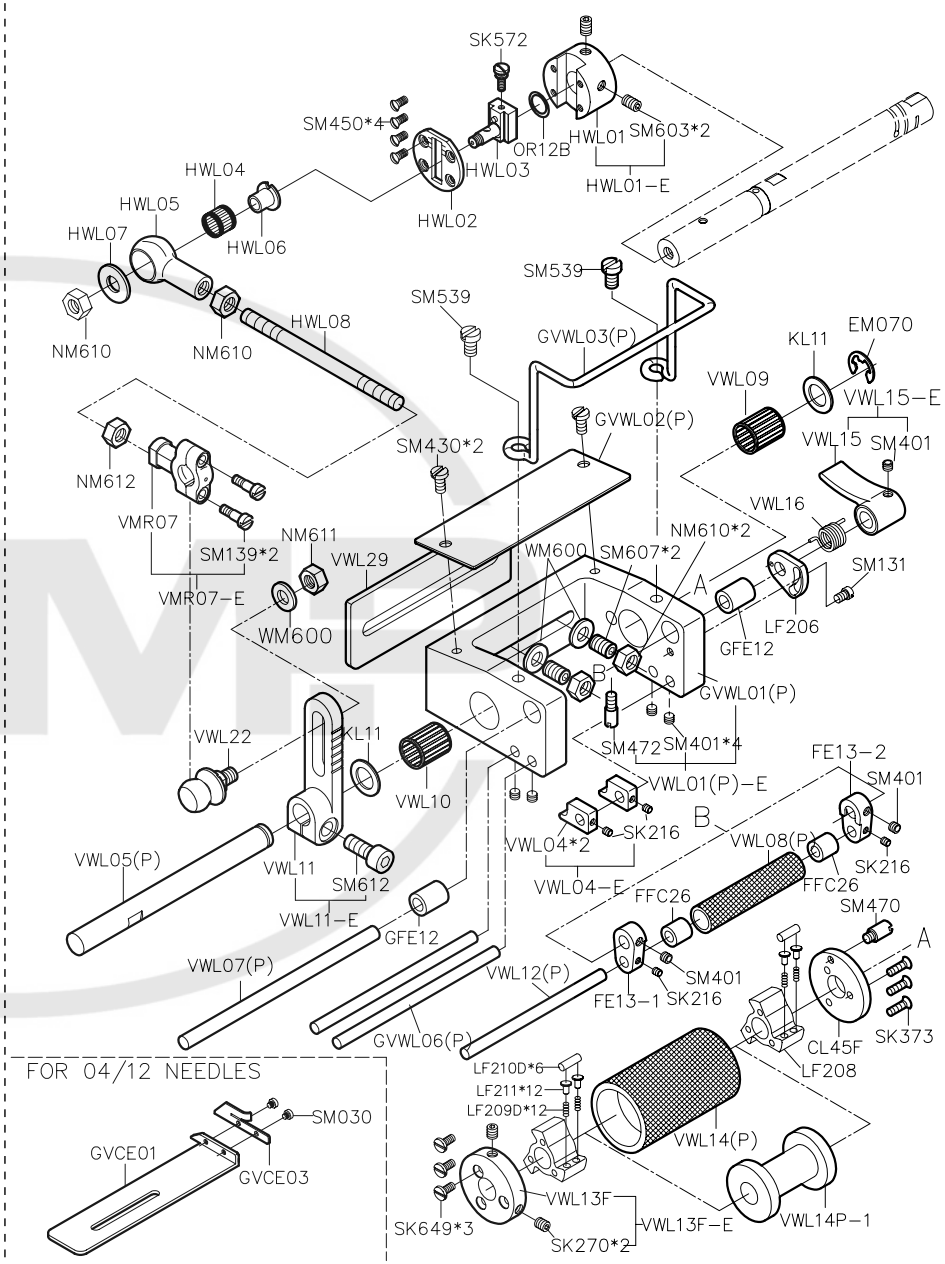

PARTS LIST FOR VUT (9) GROUP

PARTS LIST FOR VWL (1) GROUP

PARTS LIST FOR VWL (2) GROUP

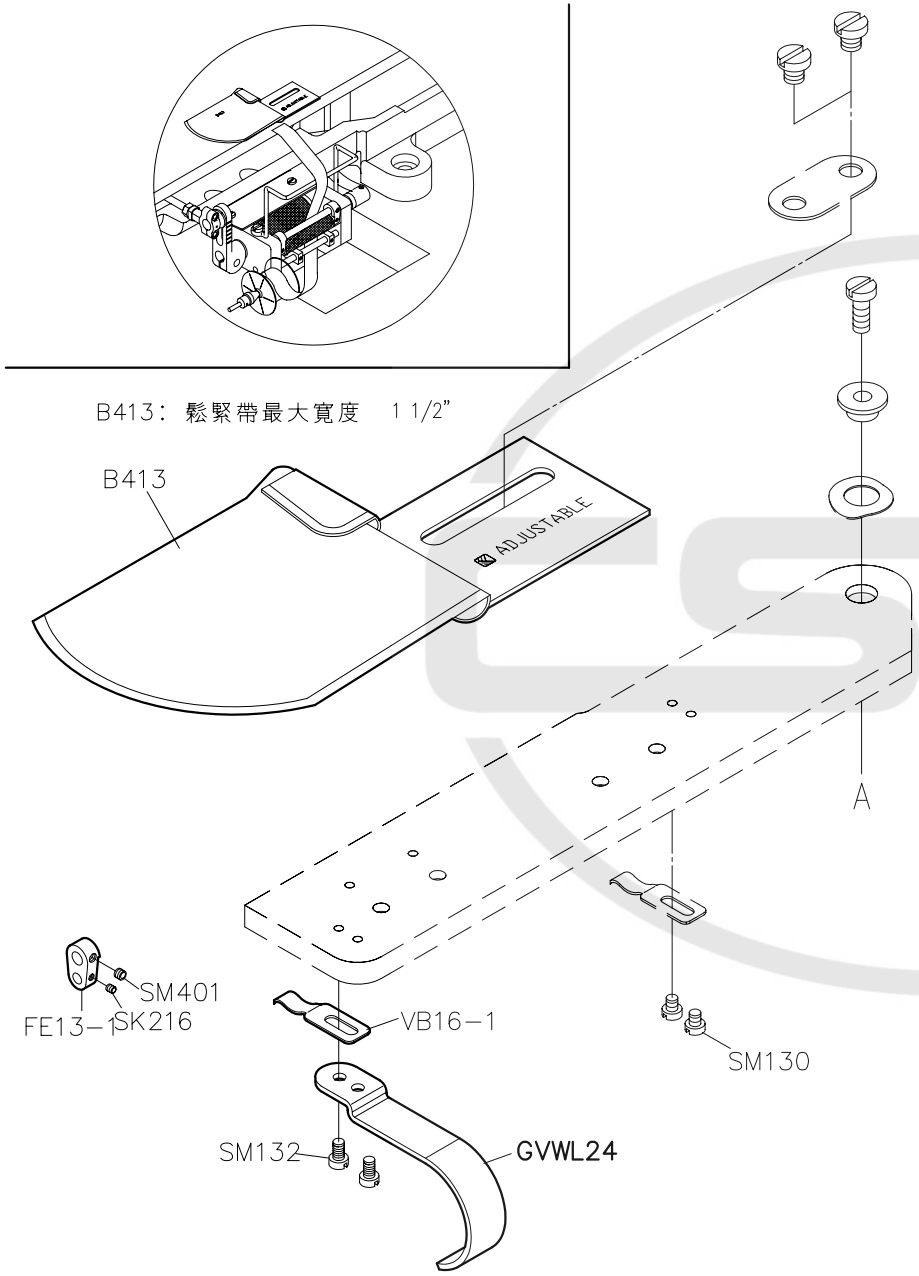

PARTS LIST FOR VWL (3) GROUP

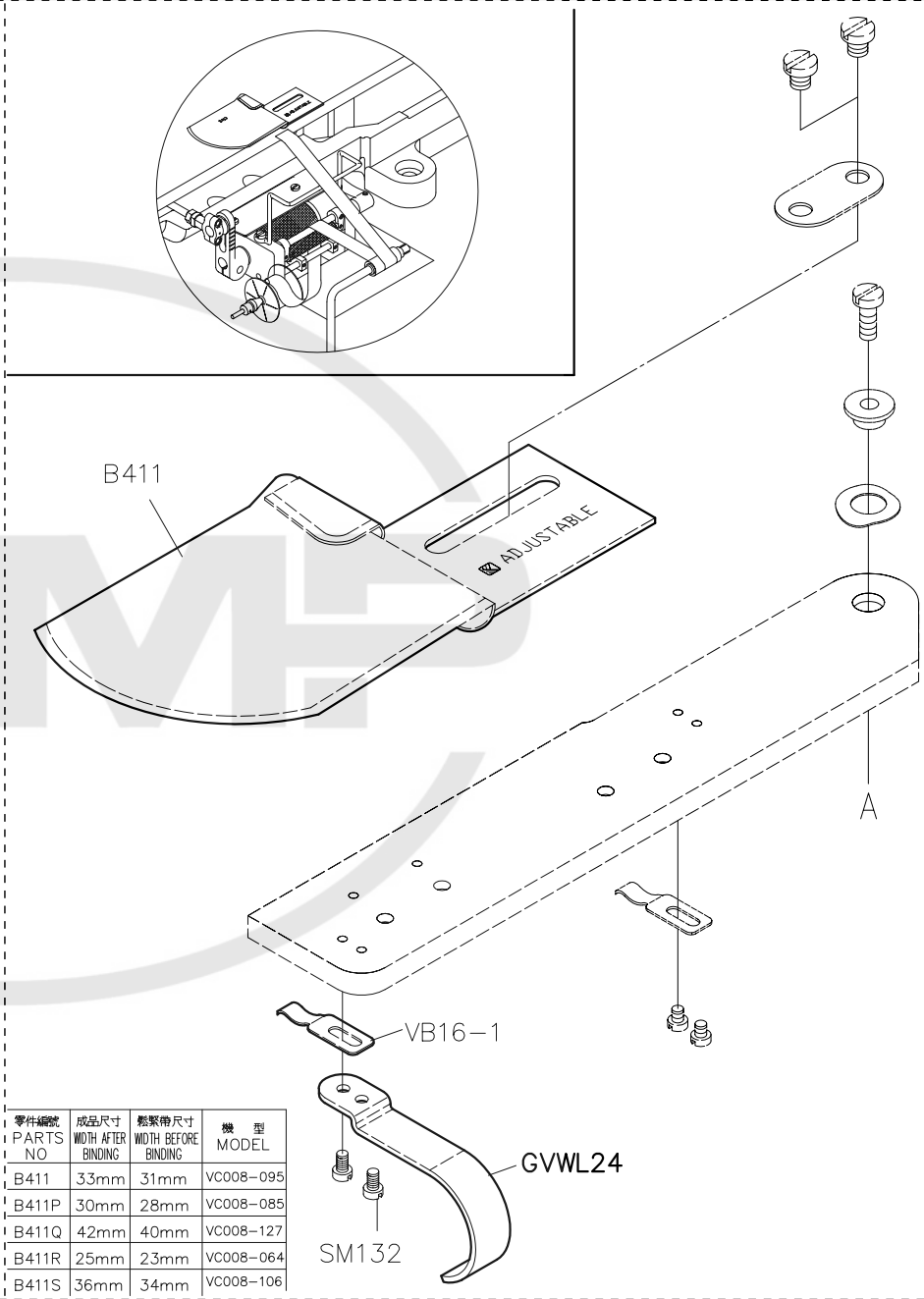

零件編號 PARTS NO	成品尺寸 WIDTH AFTER BINDING	鬆緊帶尺寸 WIDTH BEFORE BINDING	機 型 MODEL
B411	33mm	31mm	VC008−095
B411P	30mm	28mm	VC008−085
B411Q	42mm	40mm	VC008−127
B411R	25mm	23mm	VC008−064
B411S	36mm	34mm	VC008−106

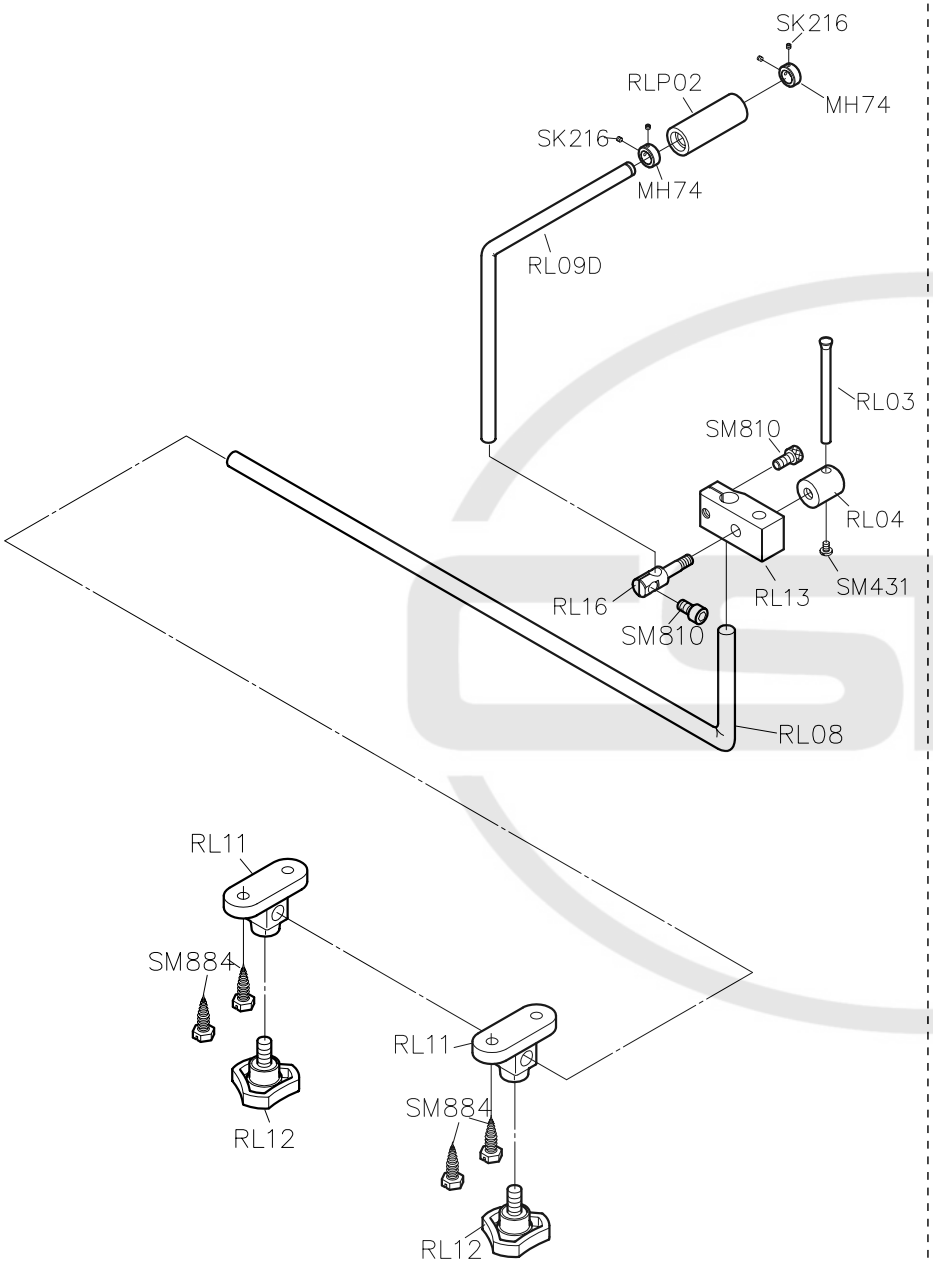

PARTS LIST FOR VWL (4) GROUP

VC008
ATTACHMENT

高林股份有限公司 KAULIN MFG. CO., LTD.

The specification and/or appearences of the equipment described in this parts list are subiect to change because of modification without previous notice.

VY09. AUG. 2007