SINGER
99W124

Form 2569w
(940)
Printed in U. S. A.

Back Cabinet

SINGER

99w124

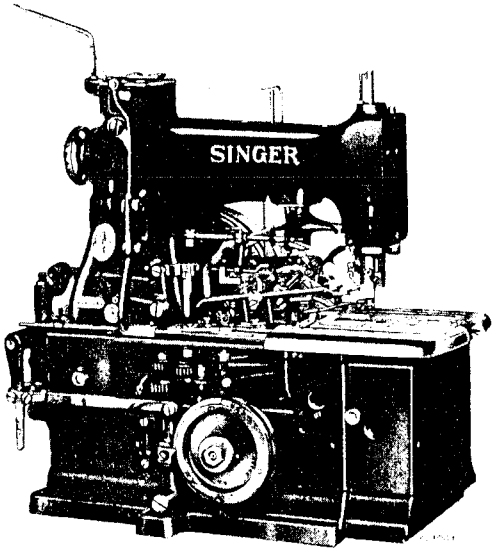

Copyright, U. S. A., 1938, 1939 and 1940
by The Singer Manufacturing Co.
All Rights Reserved for all Countries

THE SINGER MANUFACTURING COMPANY

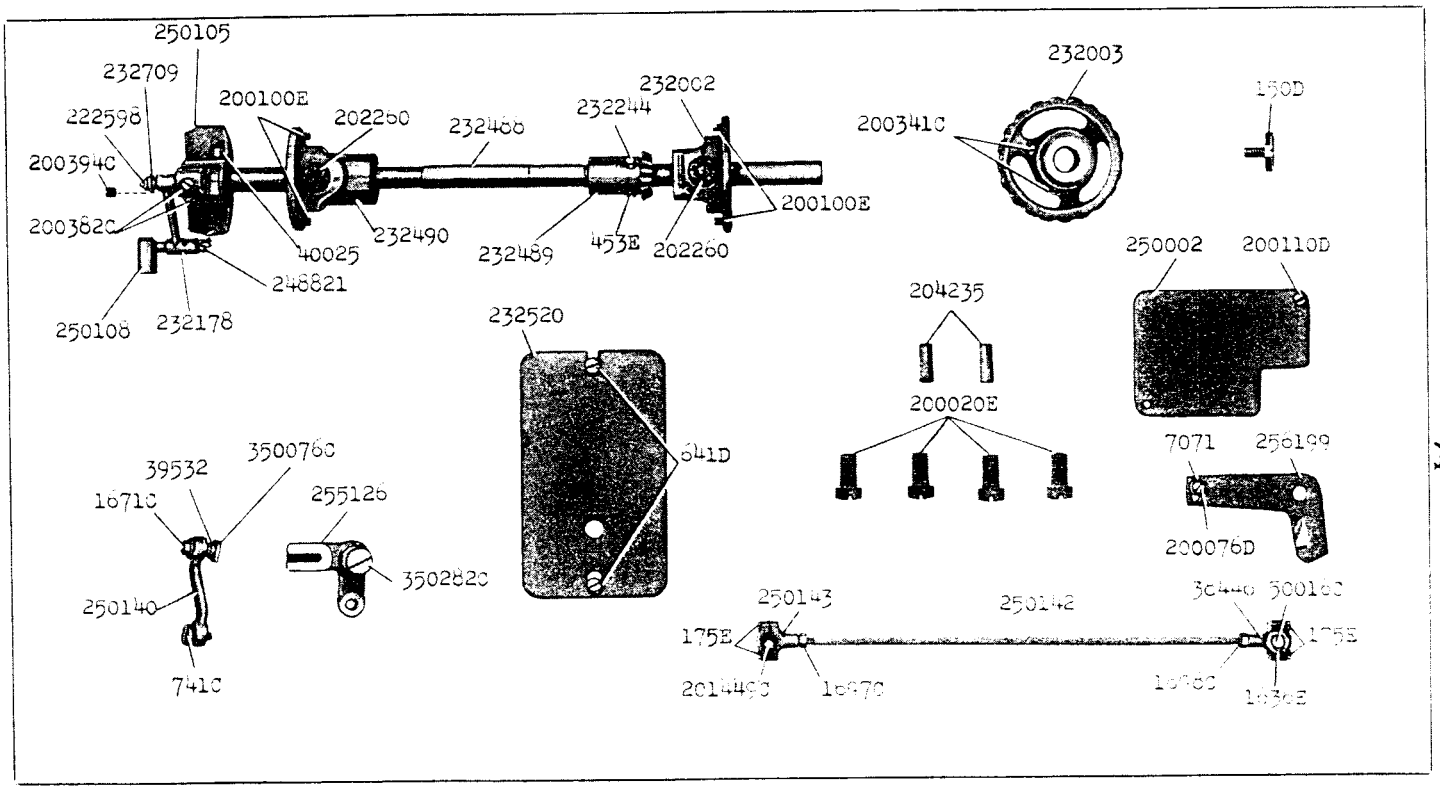
250105
232709
222598
200394C
200382C
250108
232178
200100E
202260
40025
232490
248821
232488
232489
232244
232002
453E
202260
200100E
232003
200341C
150D
250002
200110D
204235
200020E
232520
641D
7071
256199
200076D
3500760
39532
16710
255126
3502820
250140
741C
250143
250142
175E
175E

16348 - 1/4

16350 - 1/3

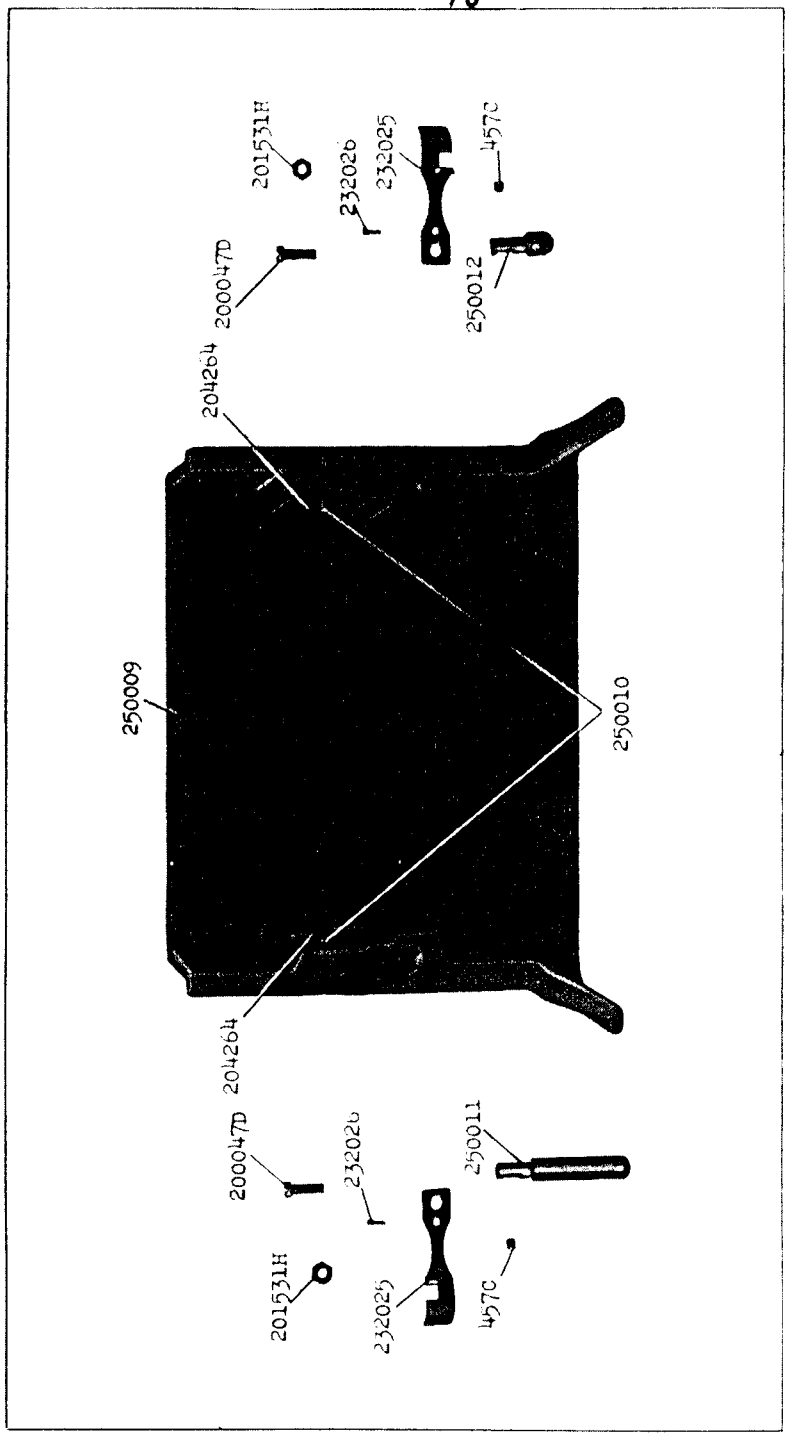

16356 - 1/2

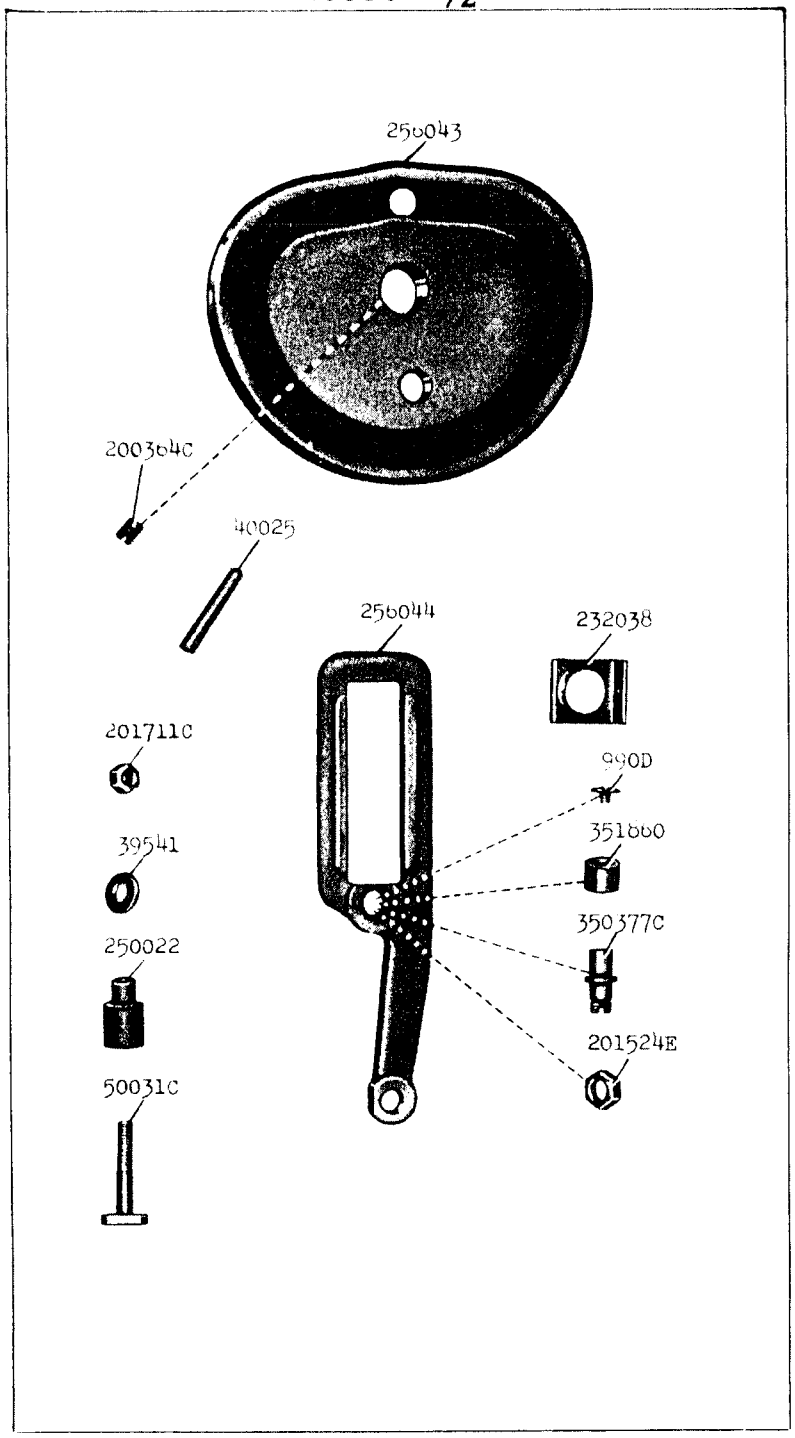

16363 - ½

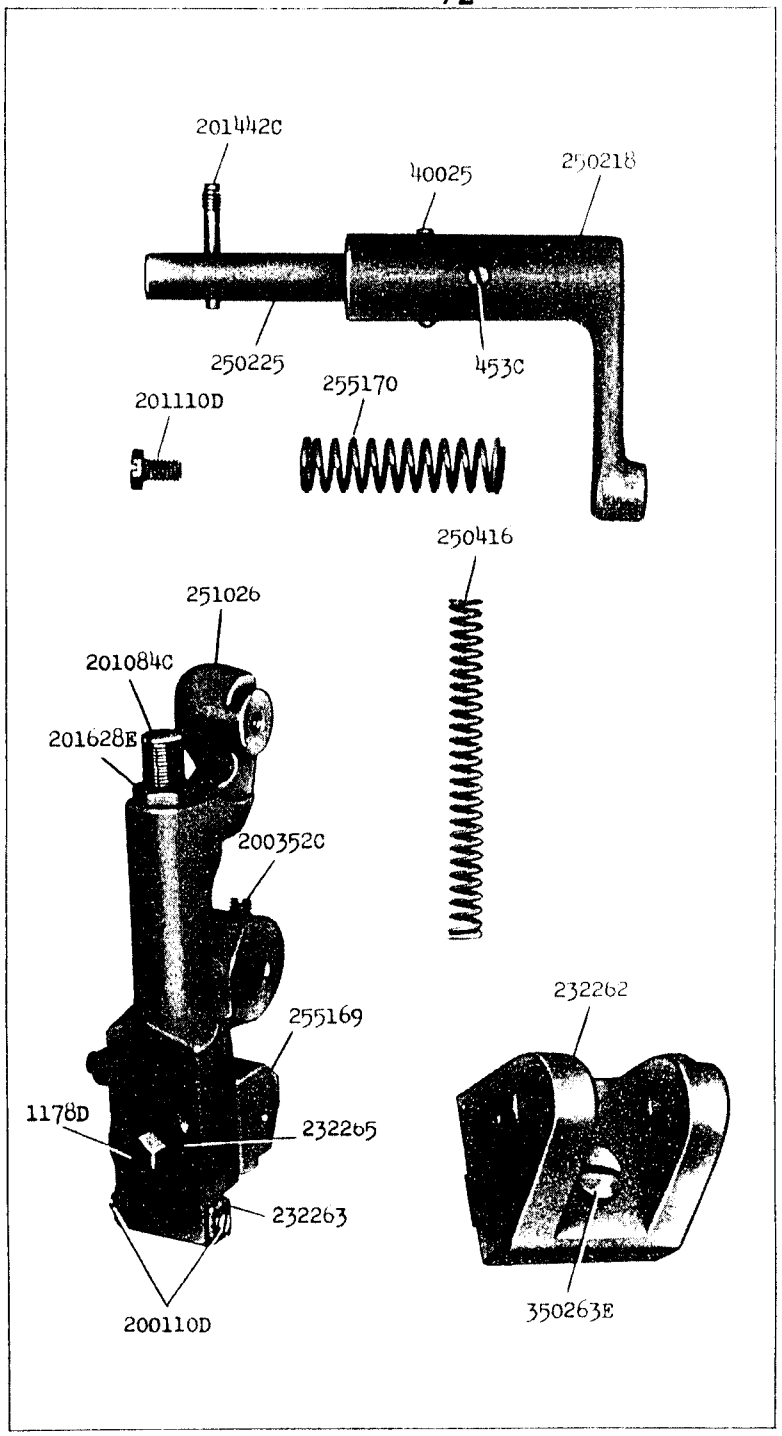

16364 - ½

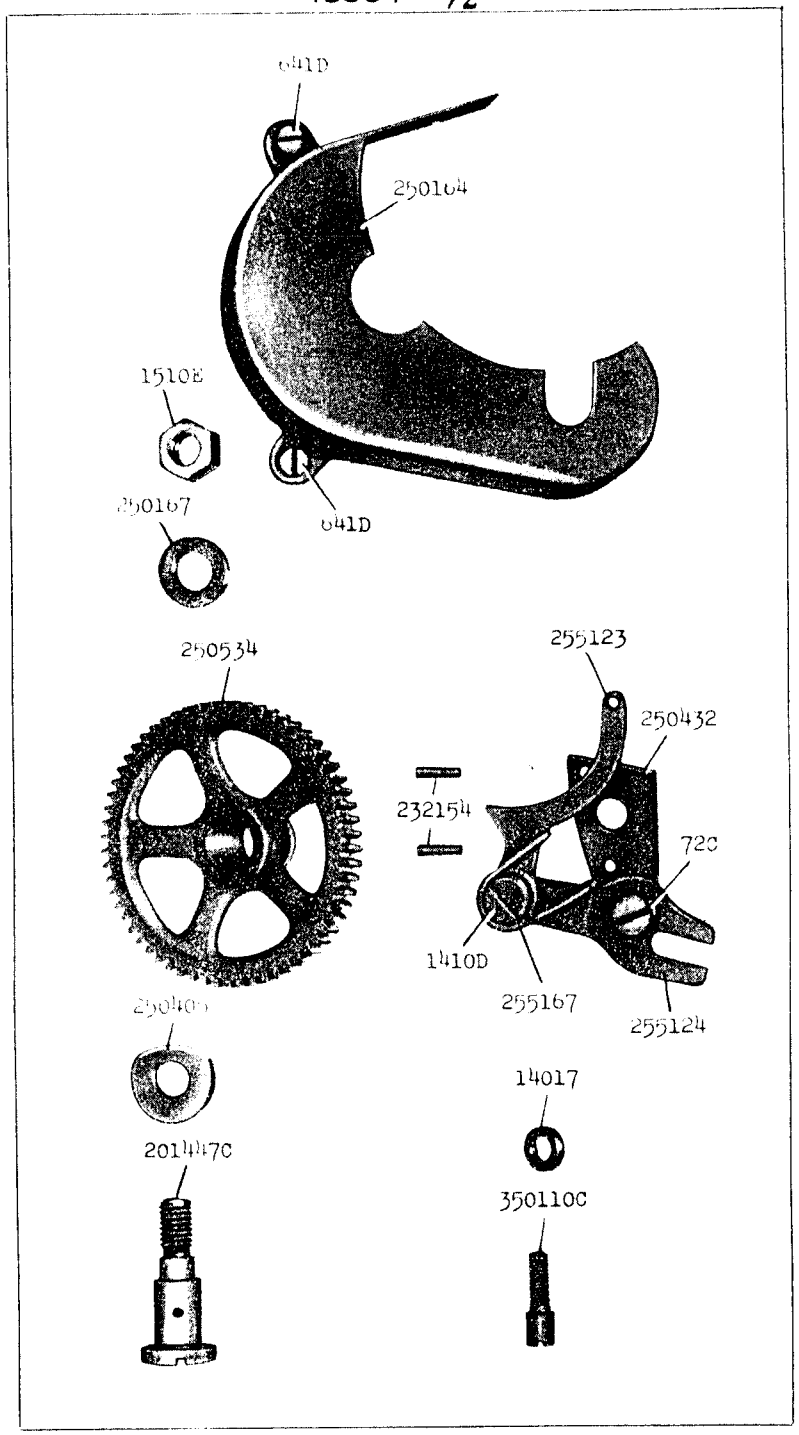

16365 - 2/3

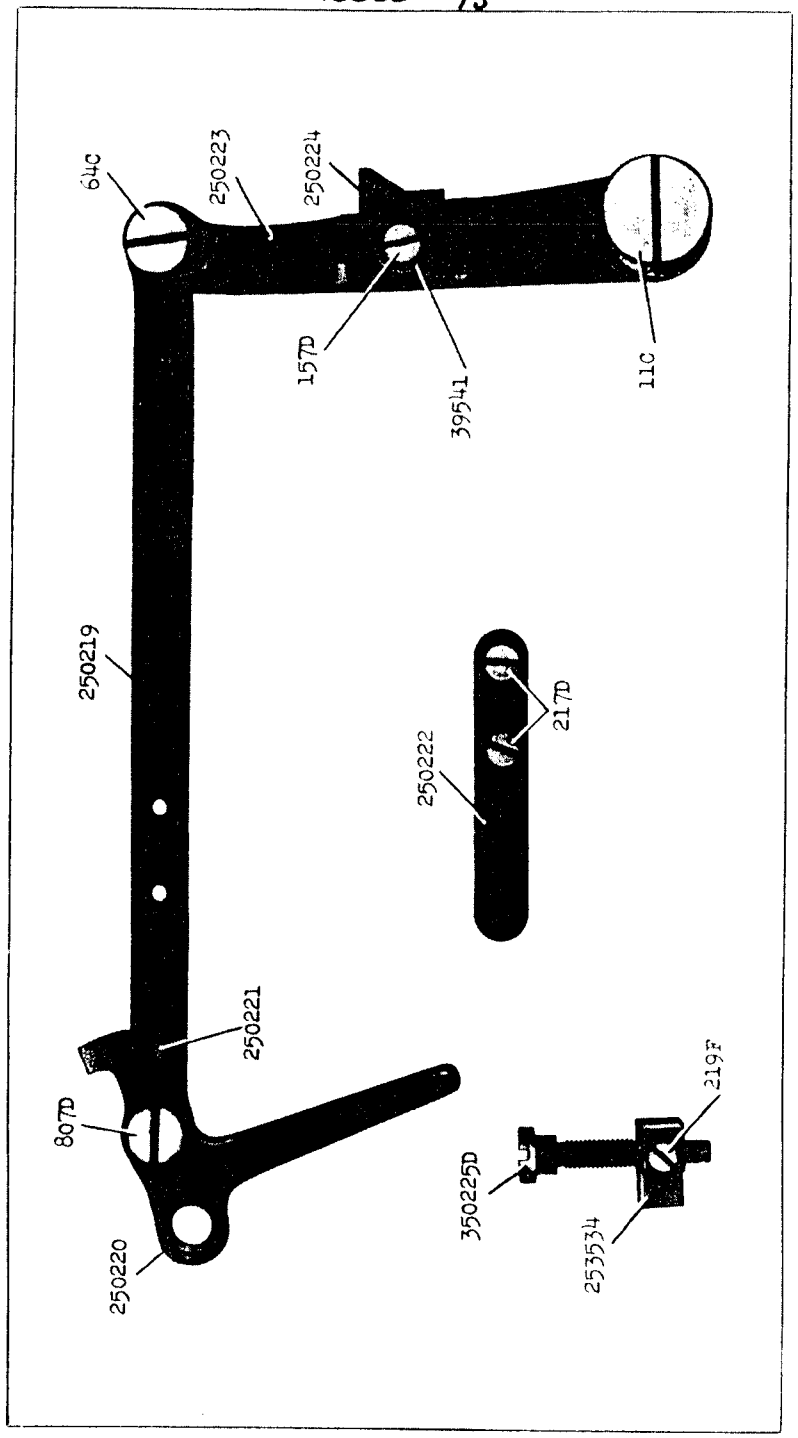

16367 - 1/4

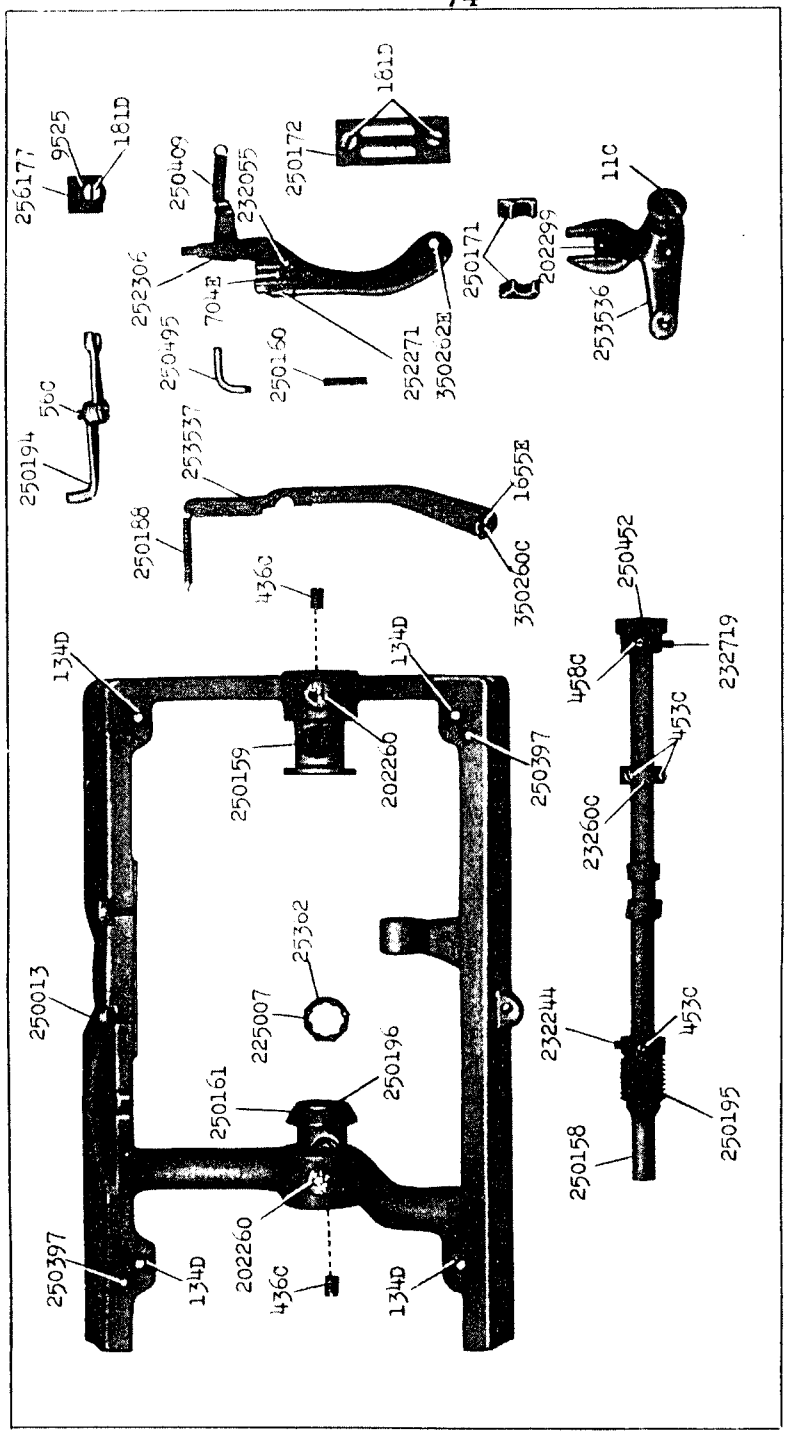

16368 - 3/8

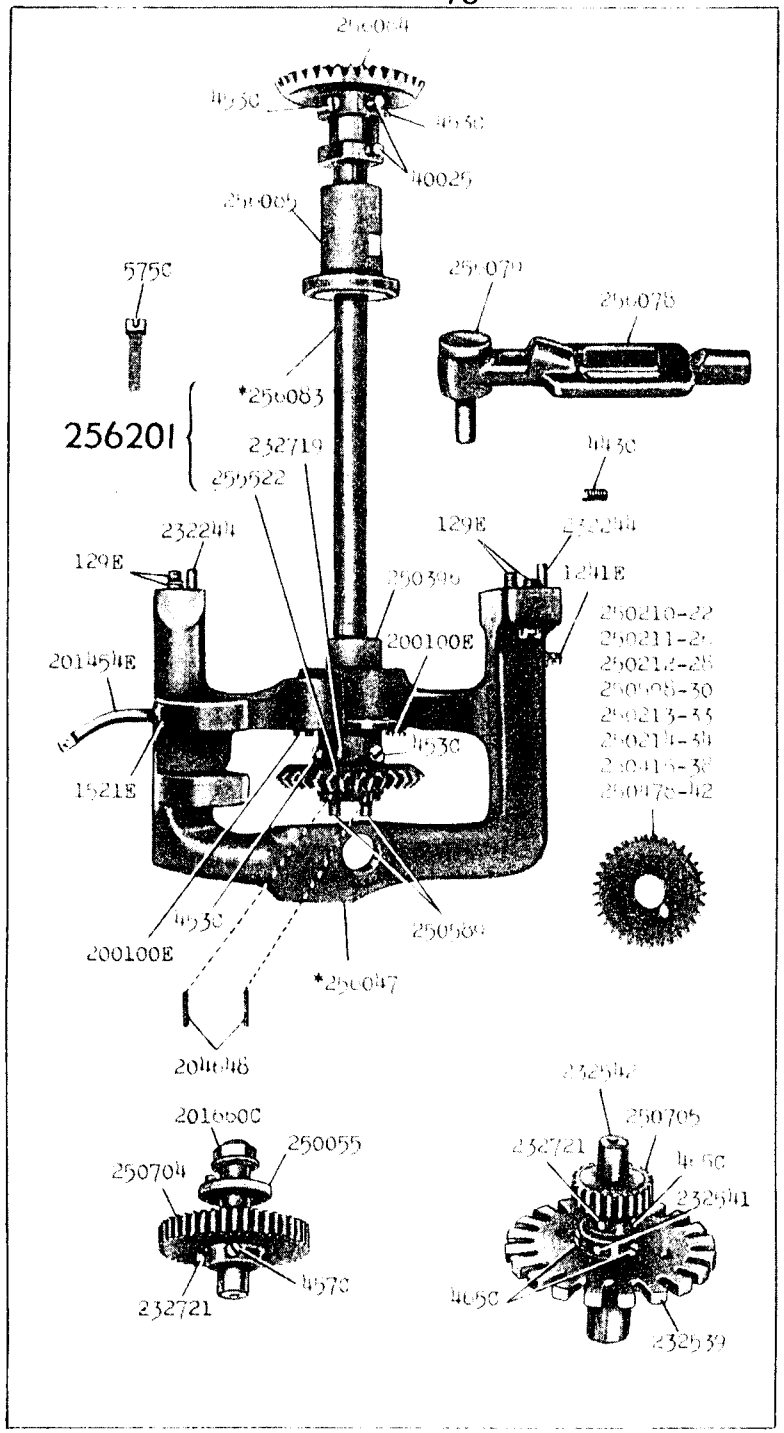

16372 - 1/2

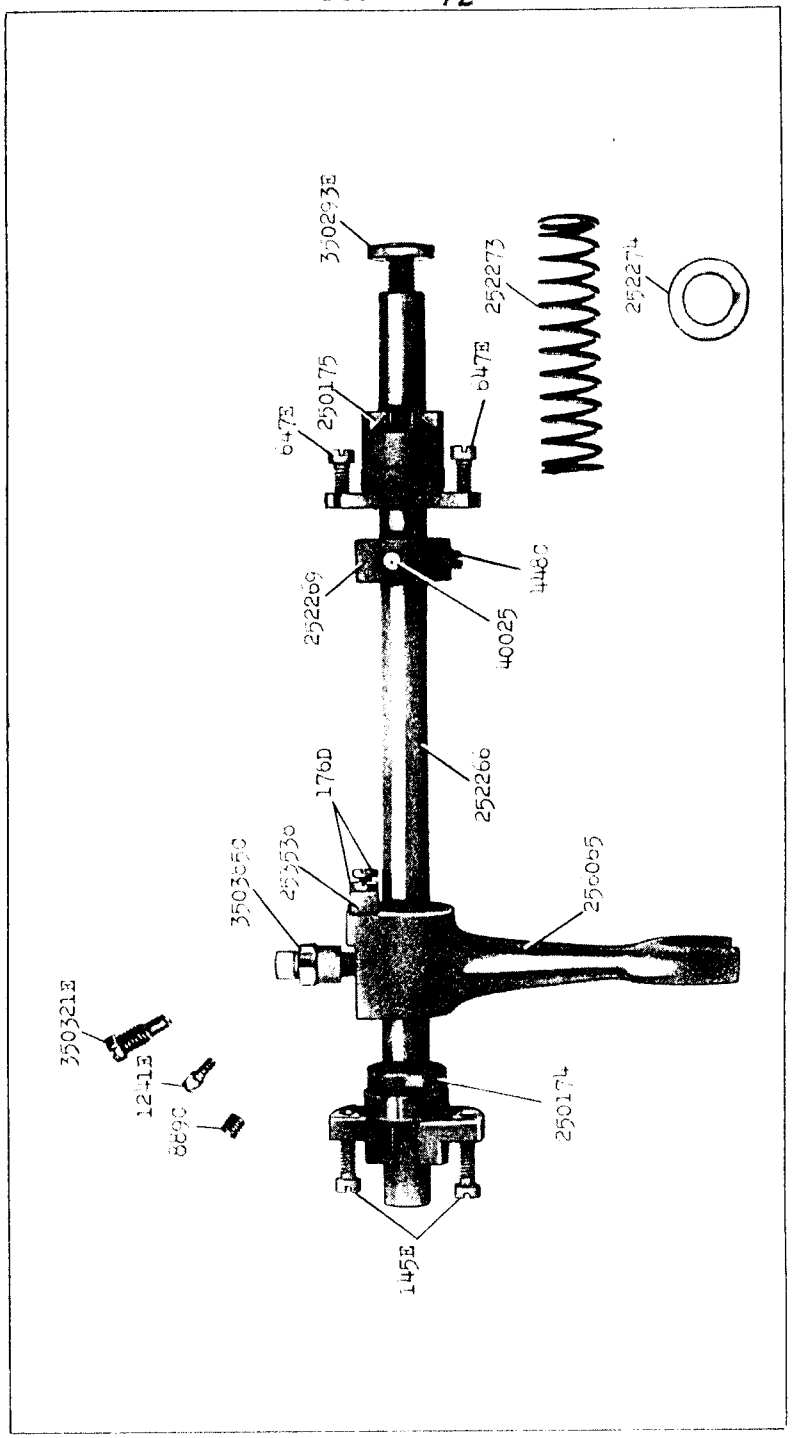

16382 - 1/4

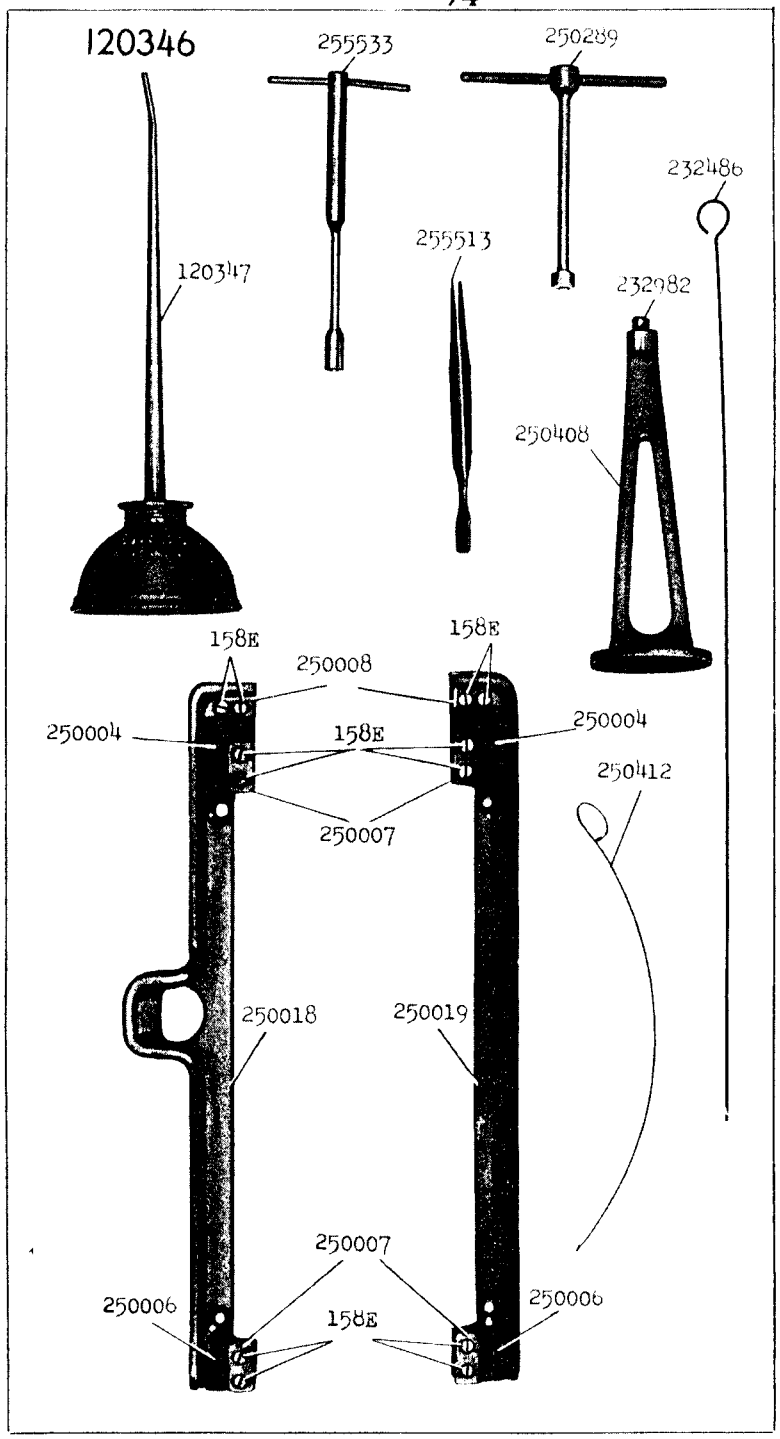

16383 - 1/4

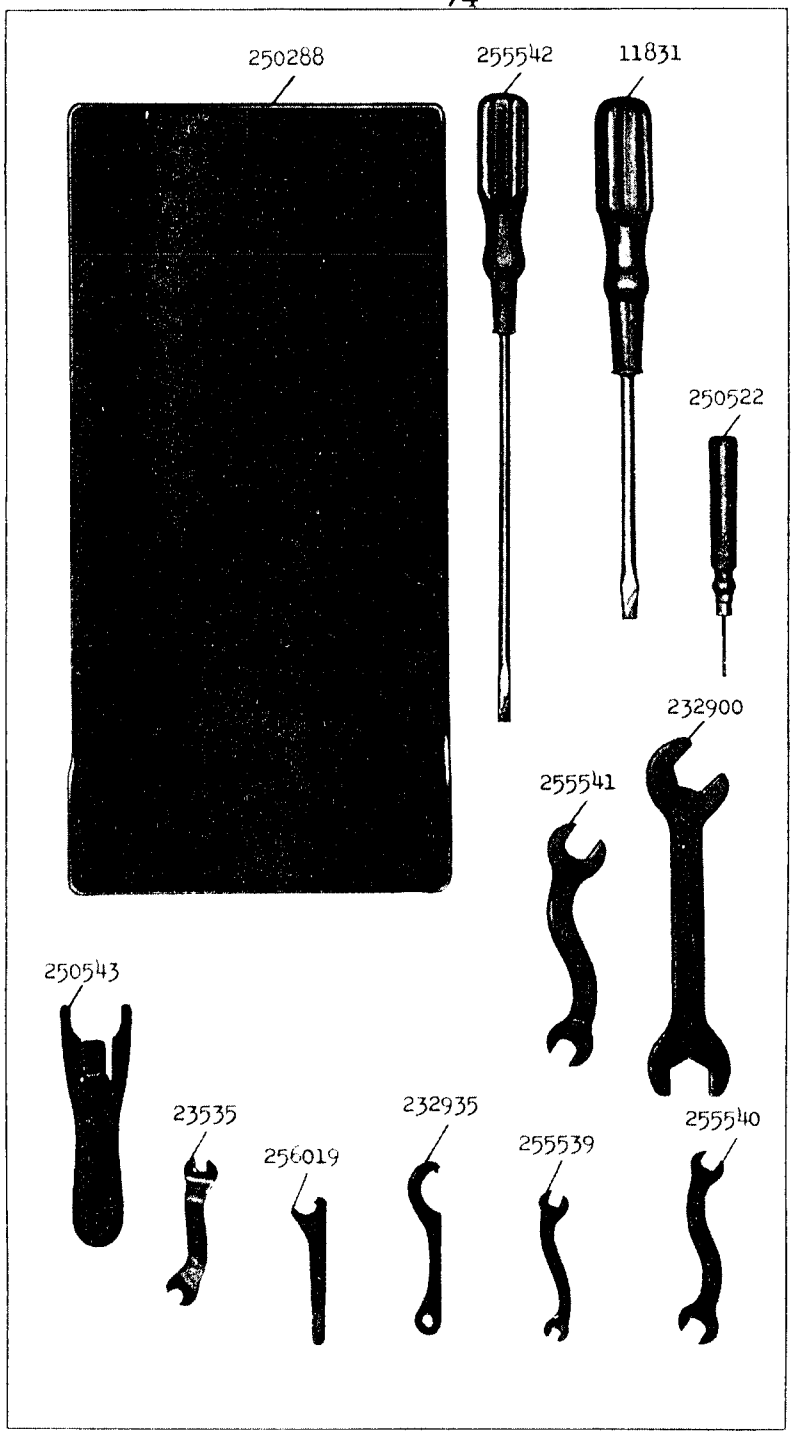

16385 - 1/6

225376

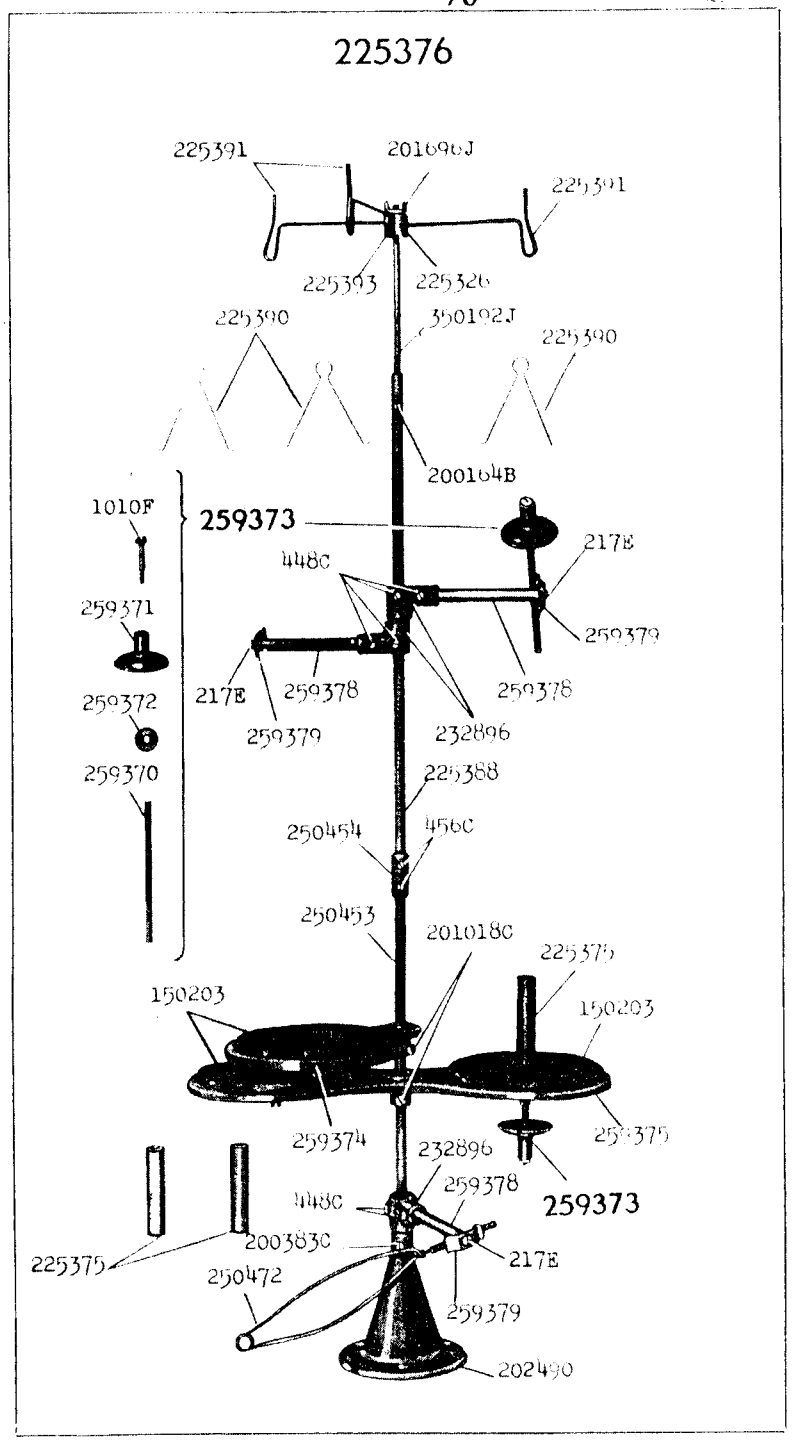

16386 - 1/6

228578

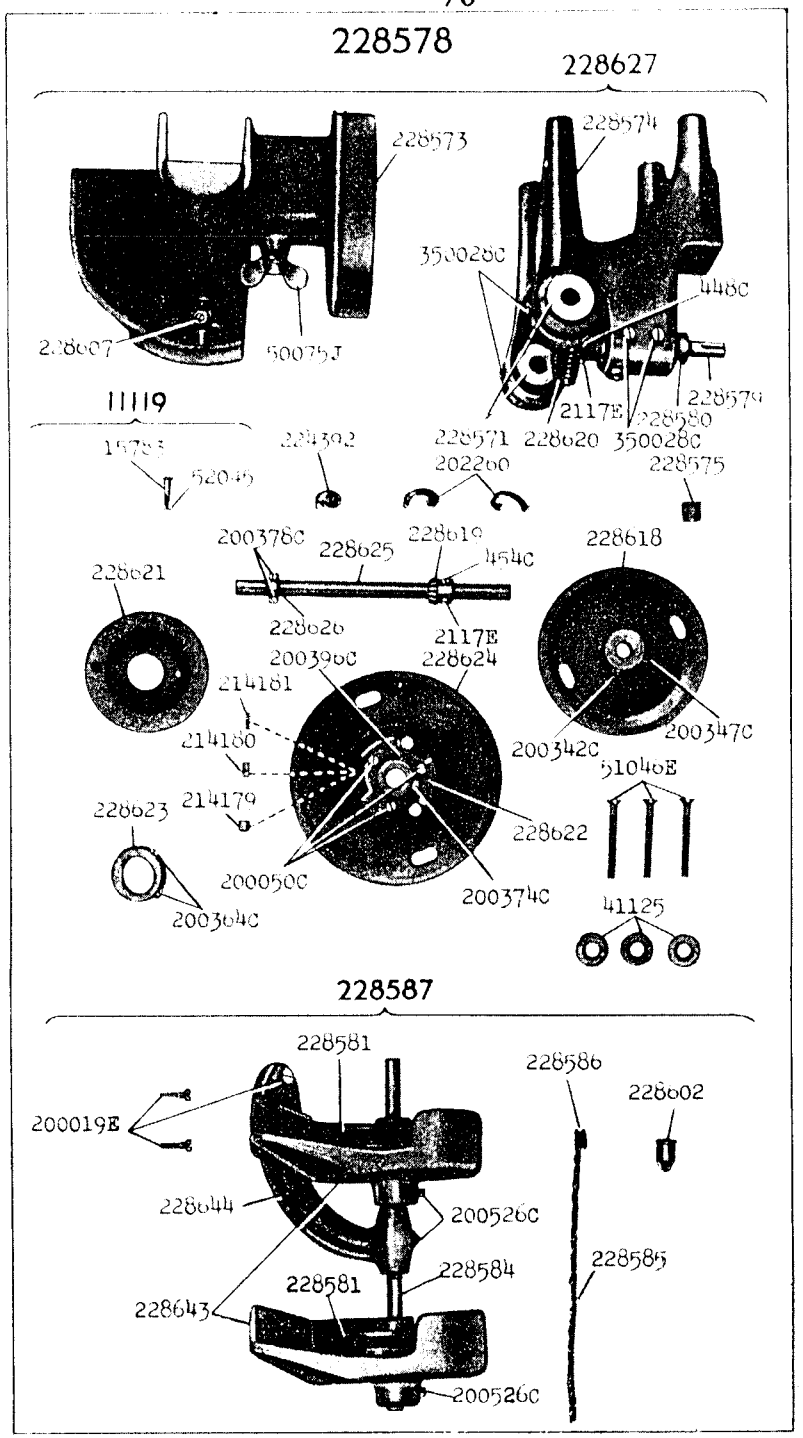

16387 - 1/5

228596

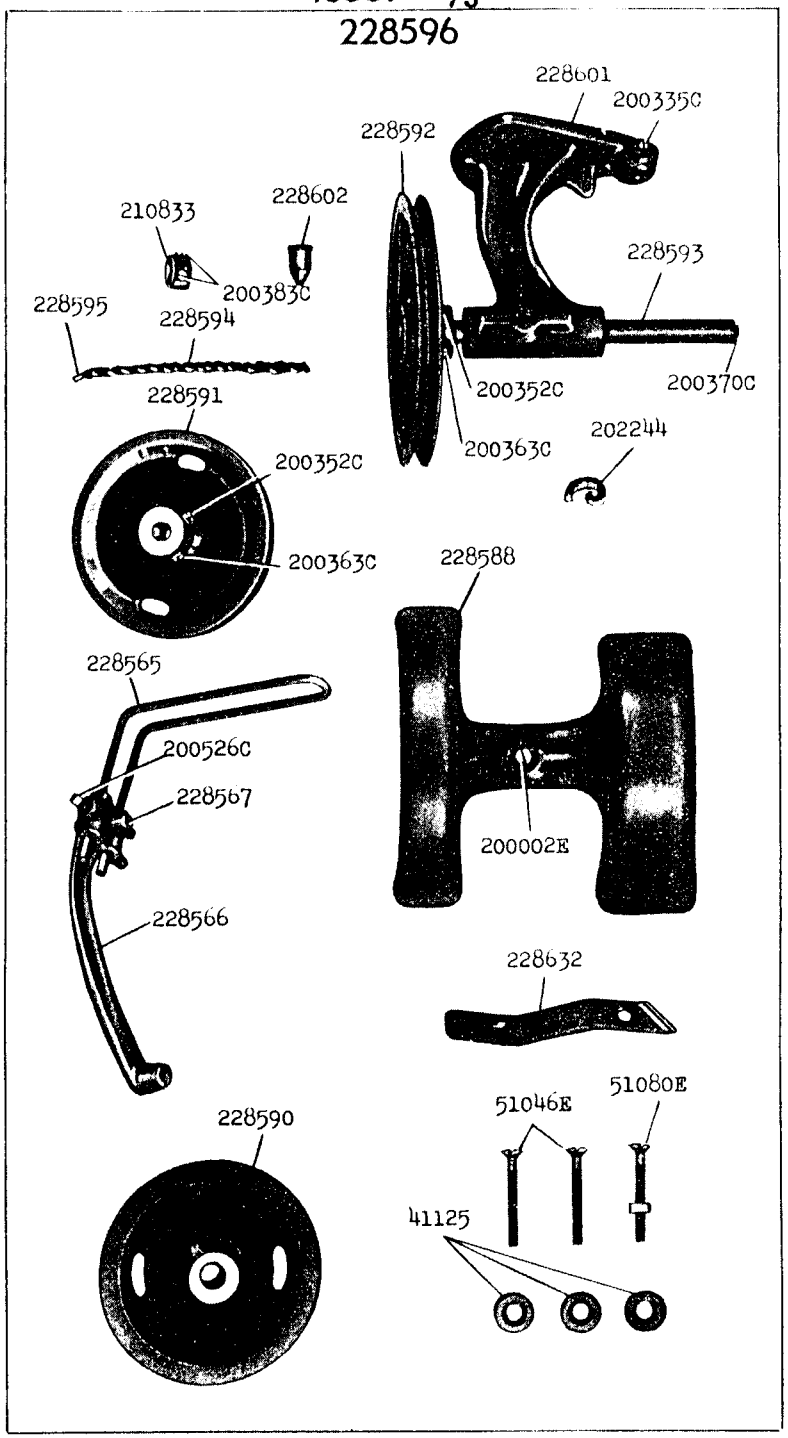

16388 - 1/6

228599

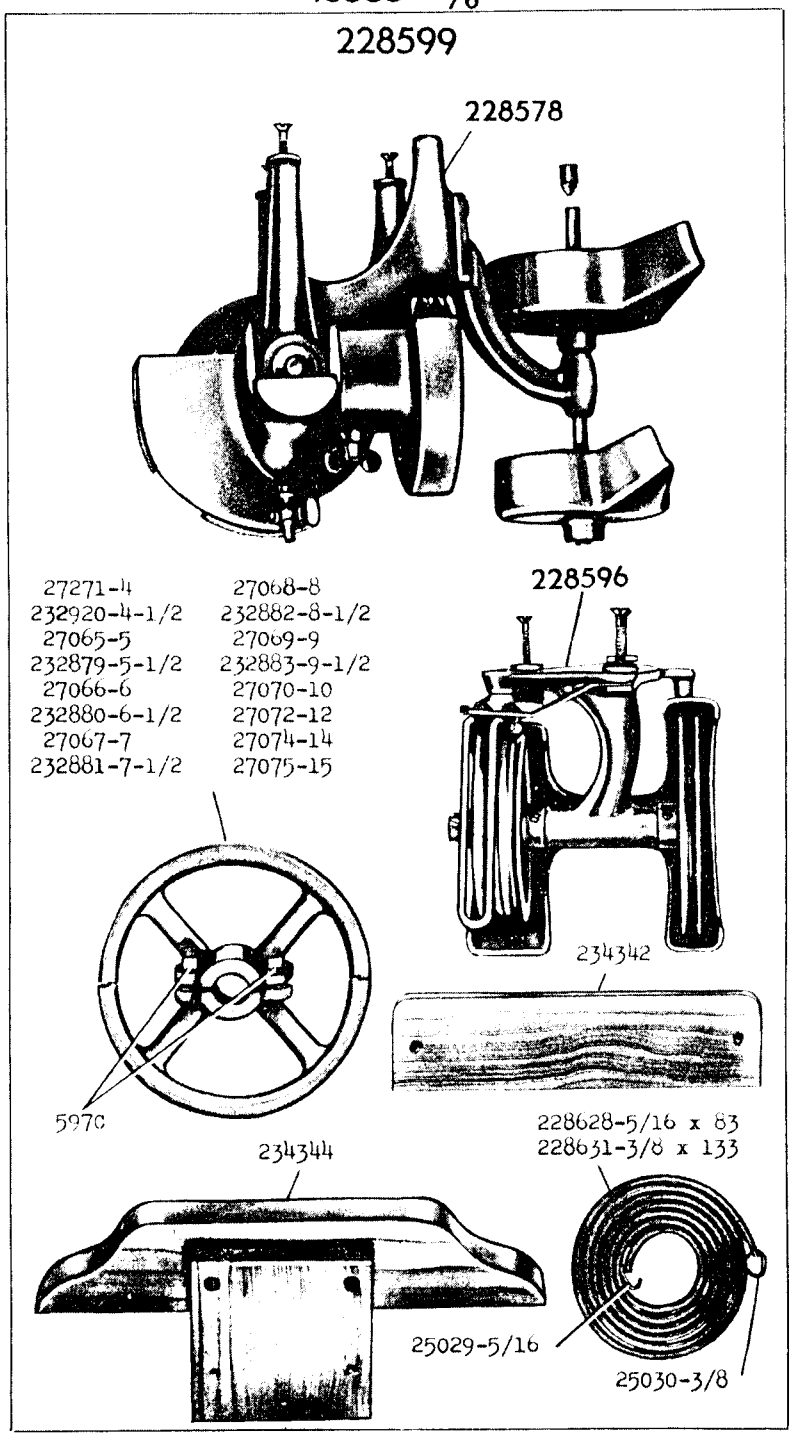

16389 - 1/6

228609

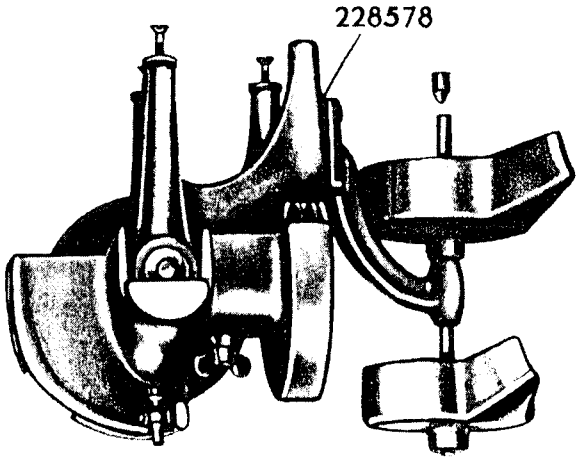

27271-4	27068-8
232920-4-1/2	232882-8-1/2
27065-5	27069-9
232879-5-1/2	232883-9-1/2
27066-6	27070-10
232880-6-1/2	27072-12
27067-7	27074-14
232881-7-1/2	27075-15

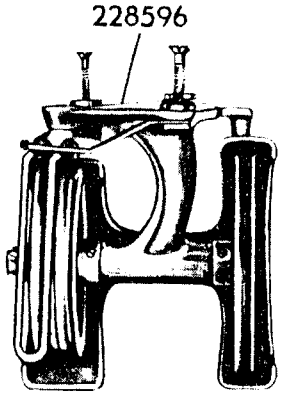

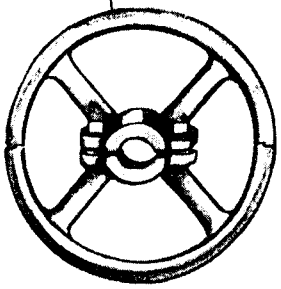

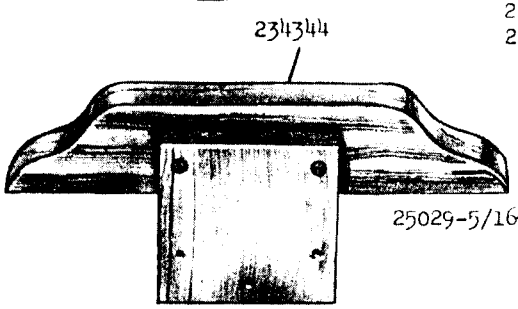

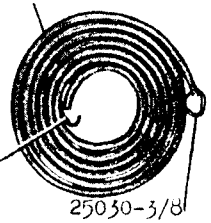

16390 - 1/6

228611

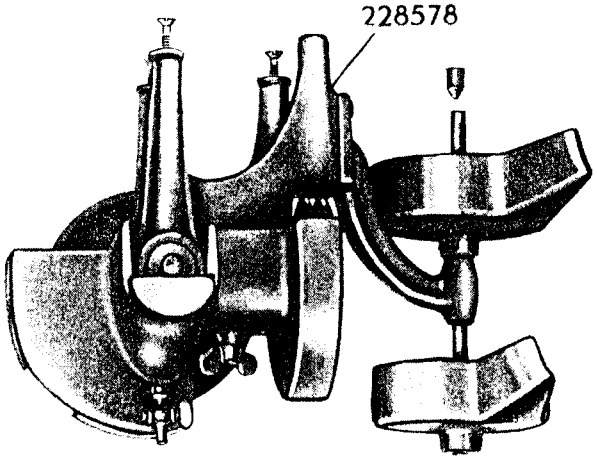

27271-4	27068-8
232920-4-1/2	232882-8-1/2
27065-5	27069-9
232879-5-1/2	232883-9-1/2
27066-6	27070-10
232880-6-1/2	27072-12
27067-7	27074-14
232881-7-1/2	27075-15

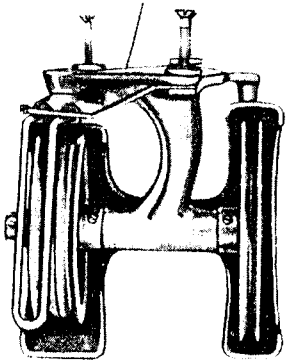

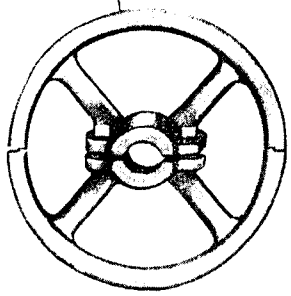

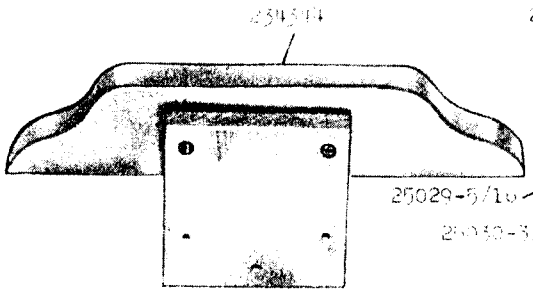

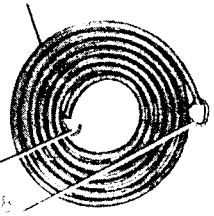

16391 - 1/6

228605

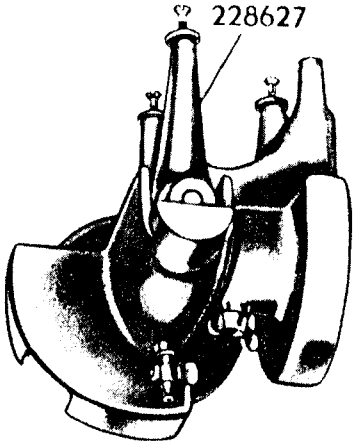

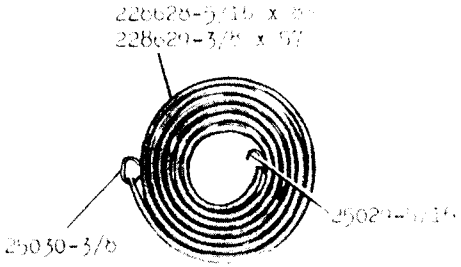

16392 - 1/6

228612

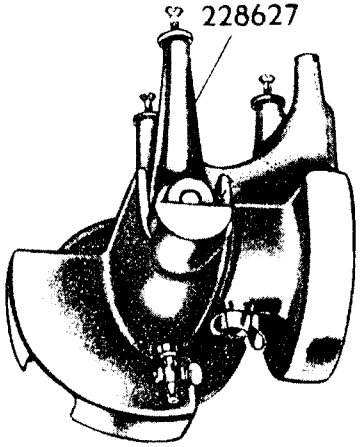

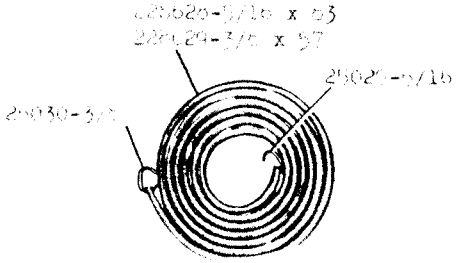

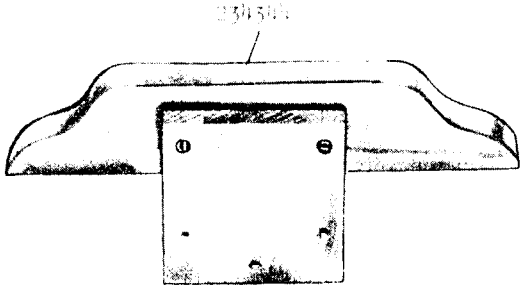

16393 - 1/6

228613

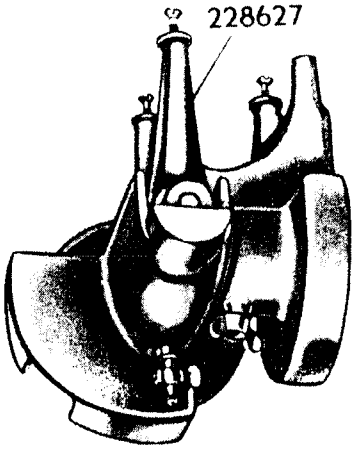

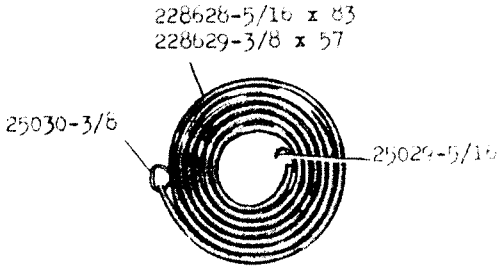

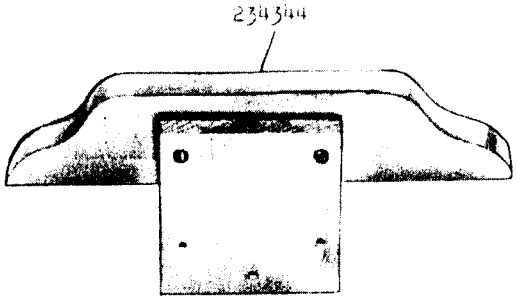

16394 - 1/4

126890

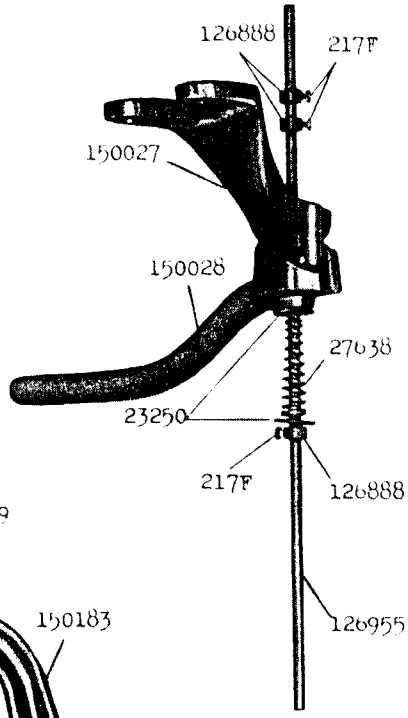

126870

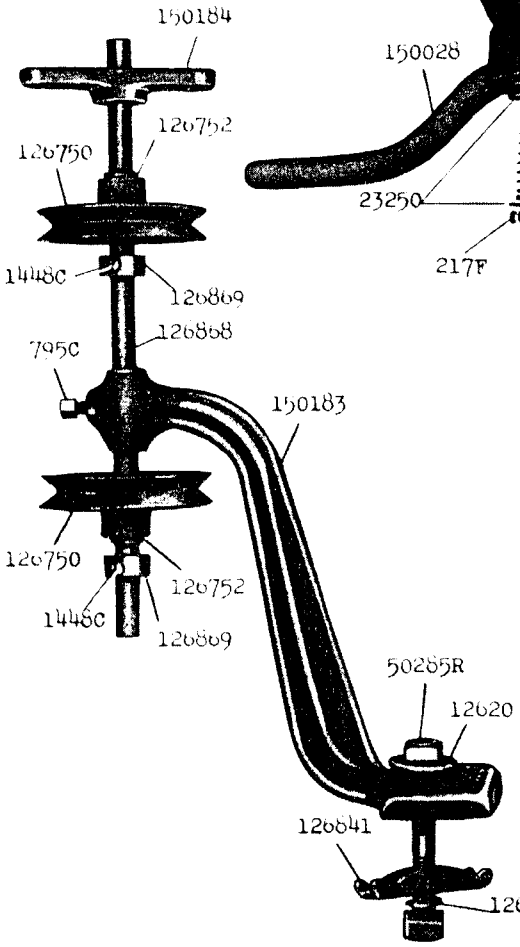

16395 - 1/6

228645

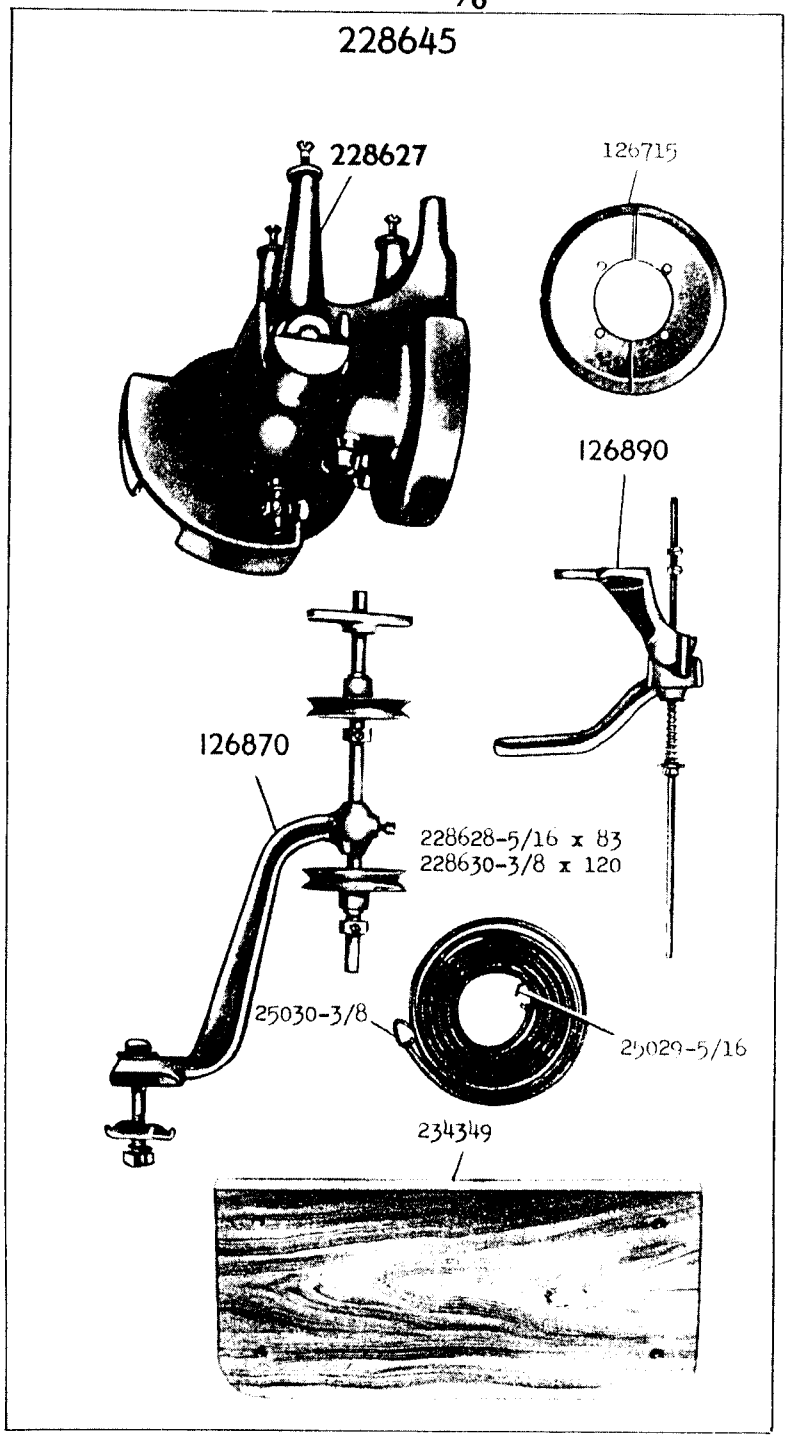

16396 - 1/6

228646

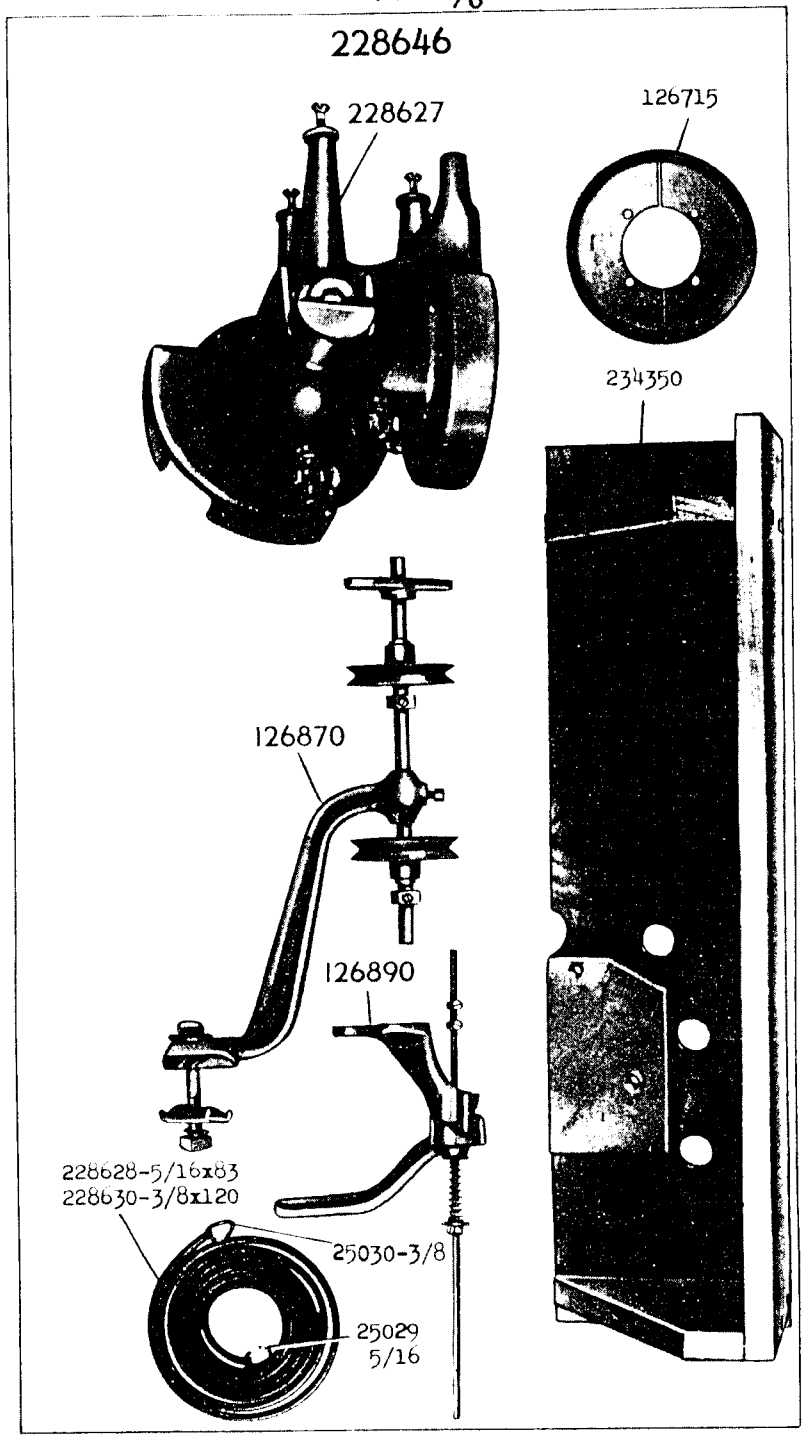

16401 - ½

232878

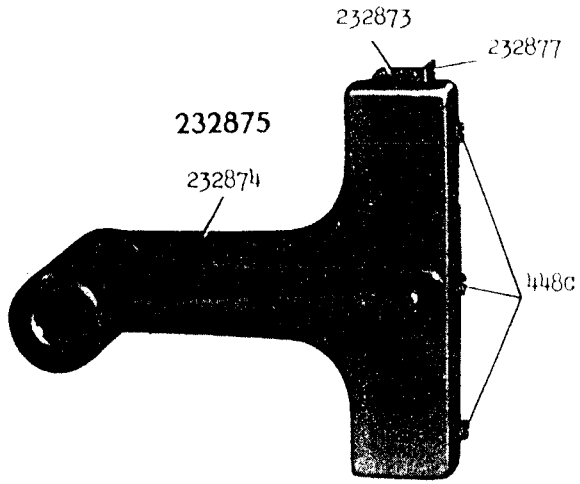

232871

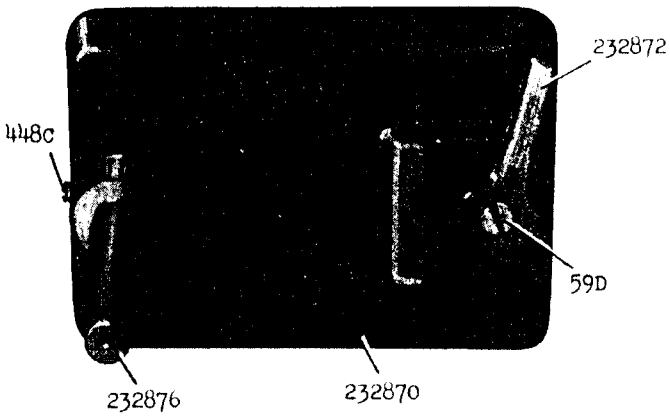

16402 - ¼

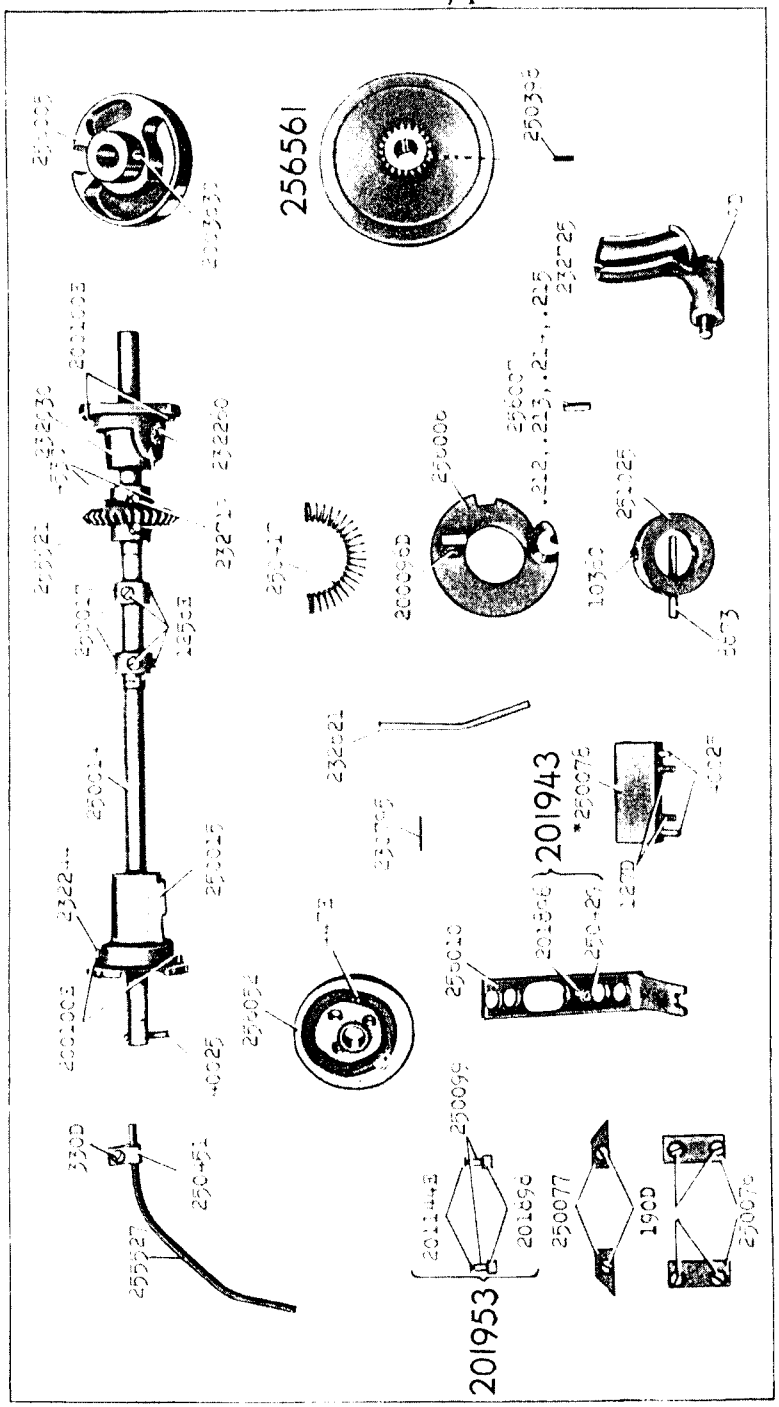

16405 - 1/3

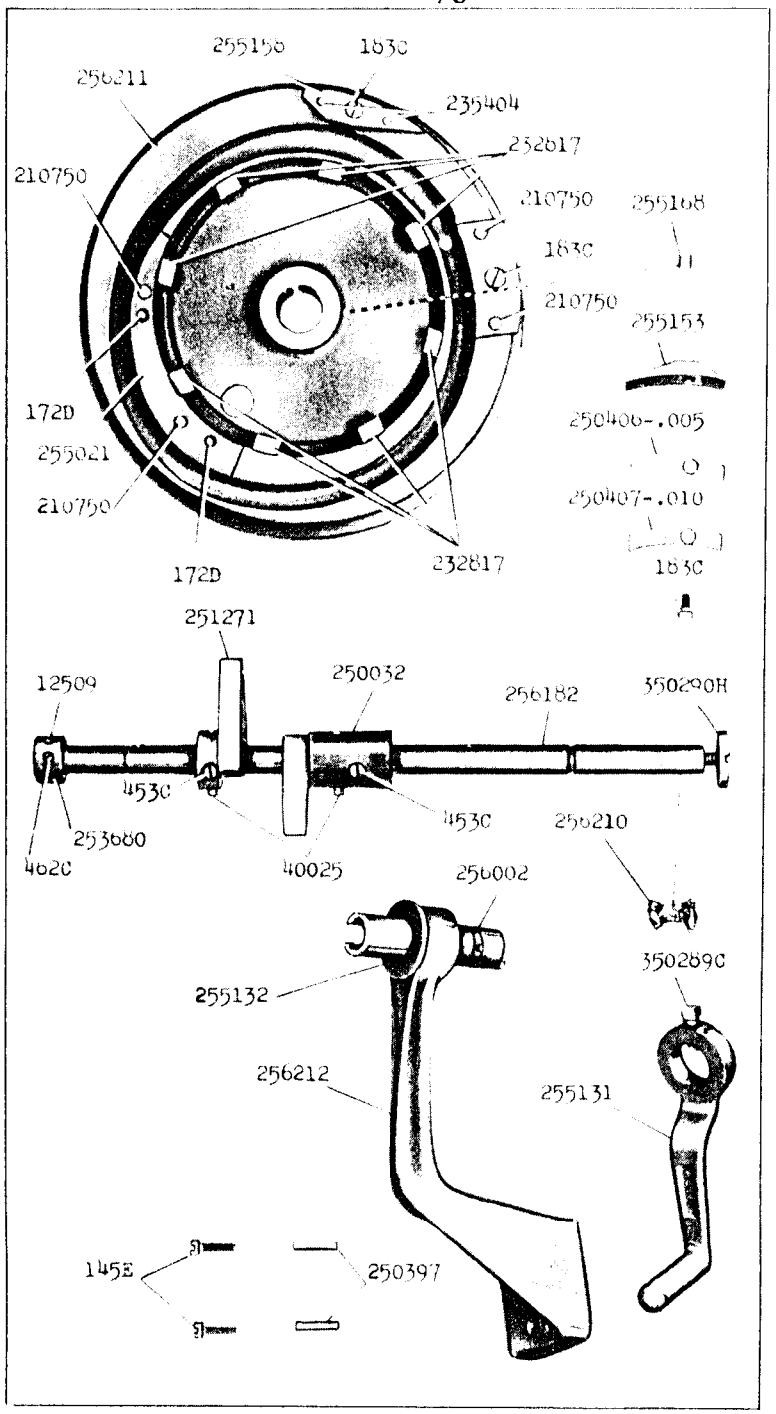

16406 - 1/2

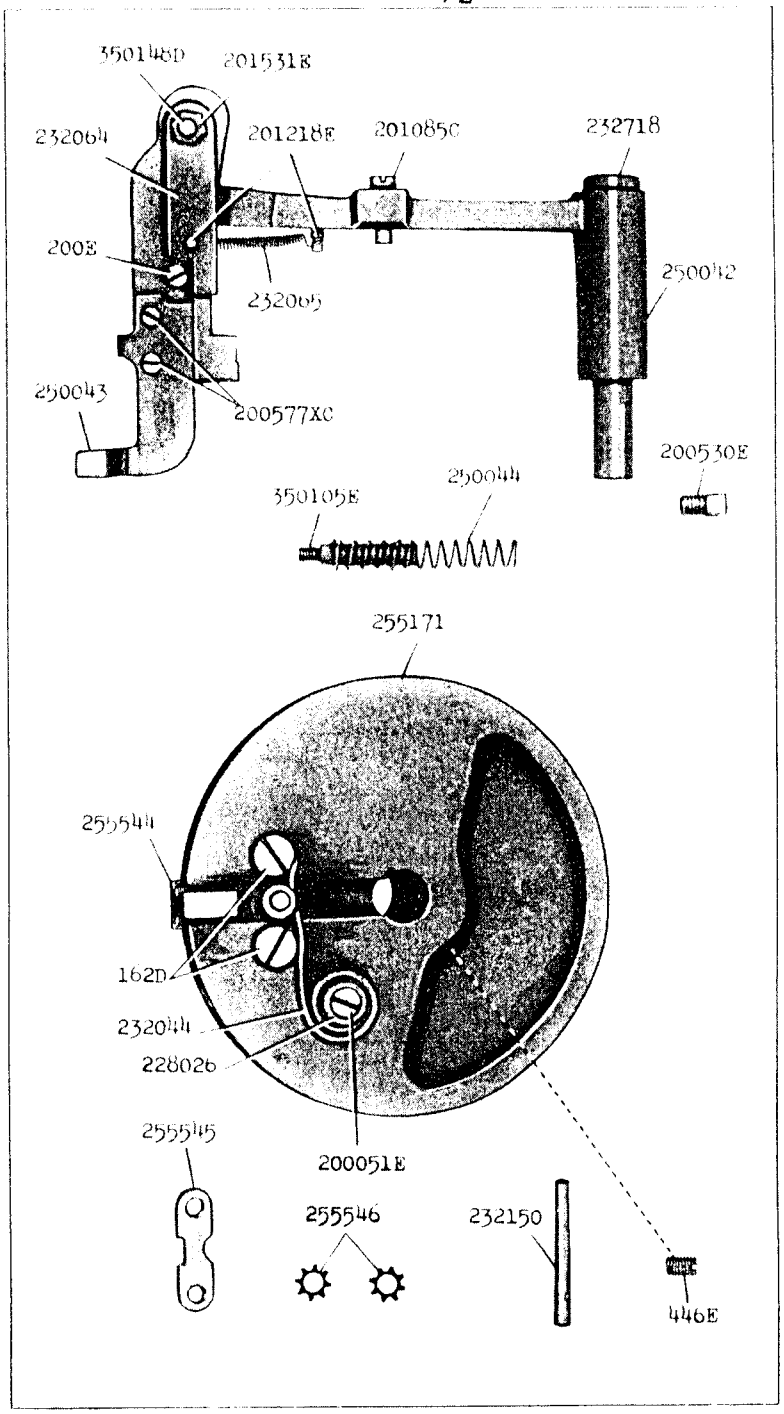

16407 - ½

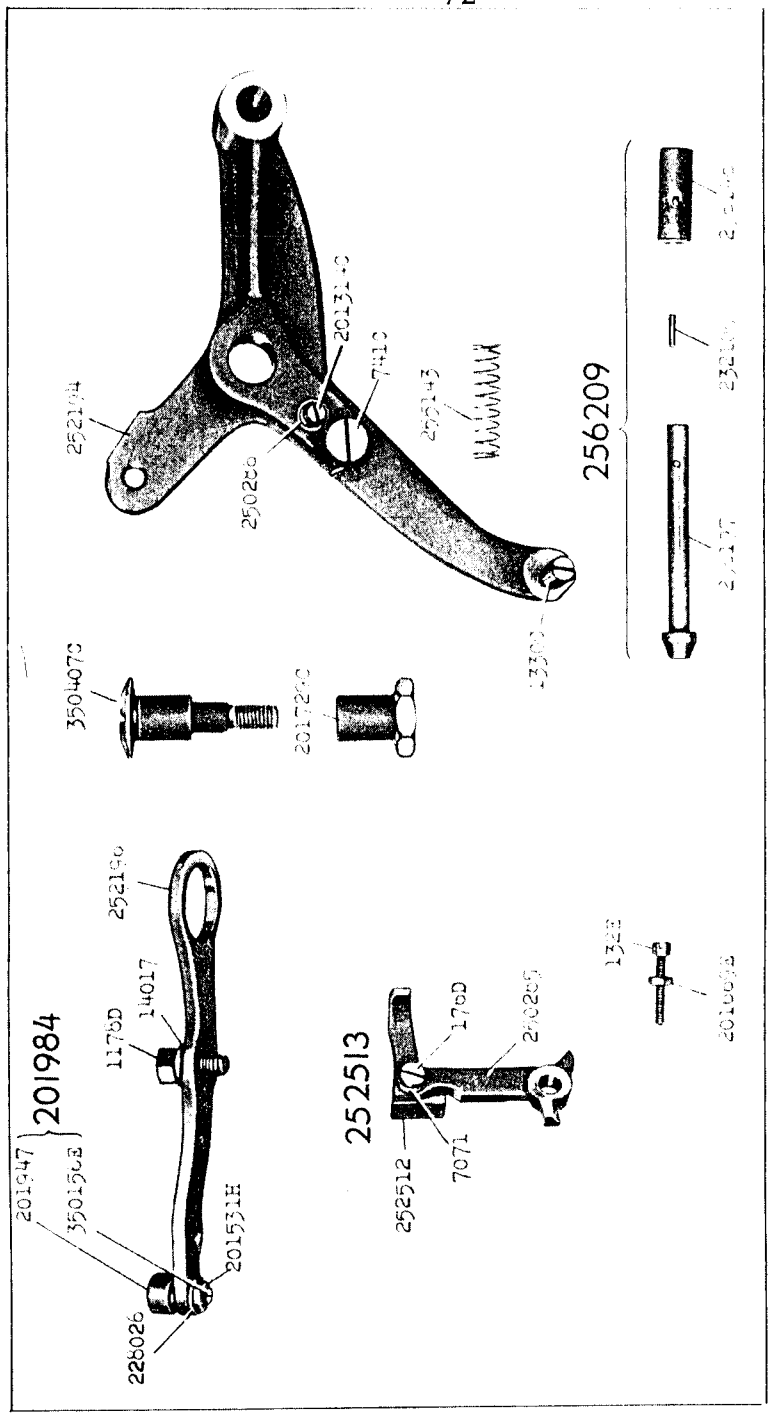

16408 - ⅓

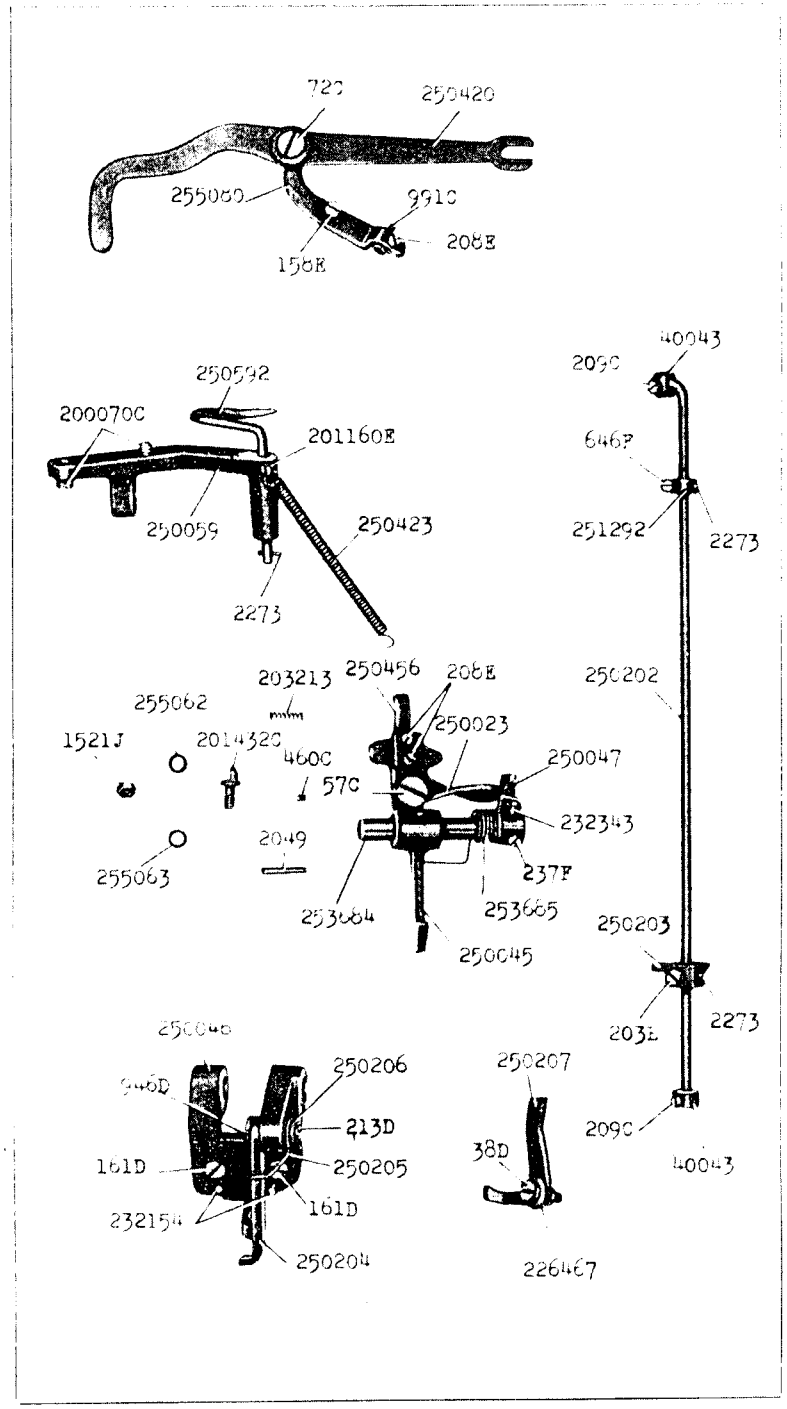

16409 - 2/3

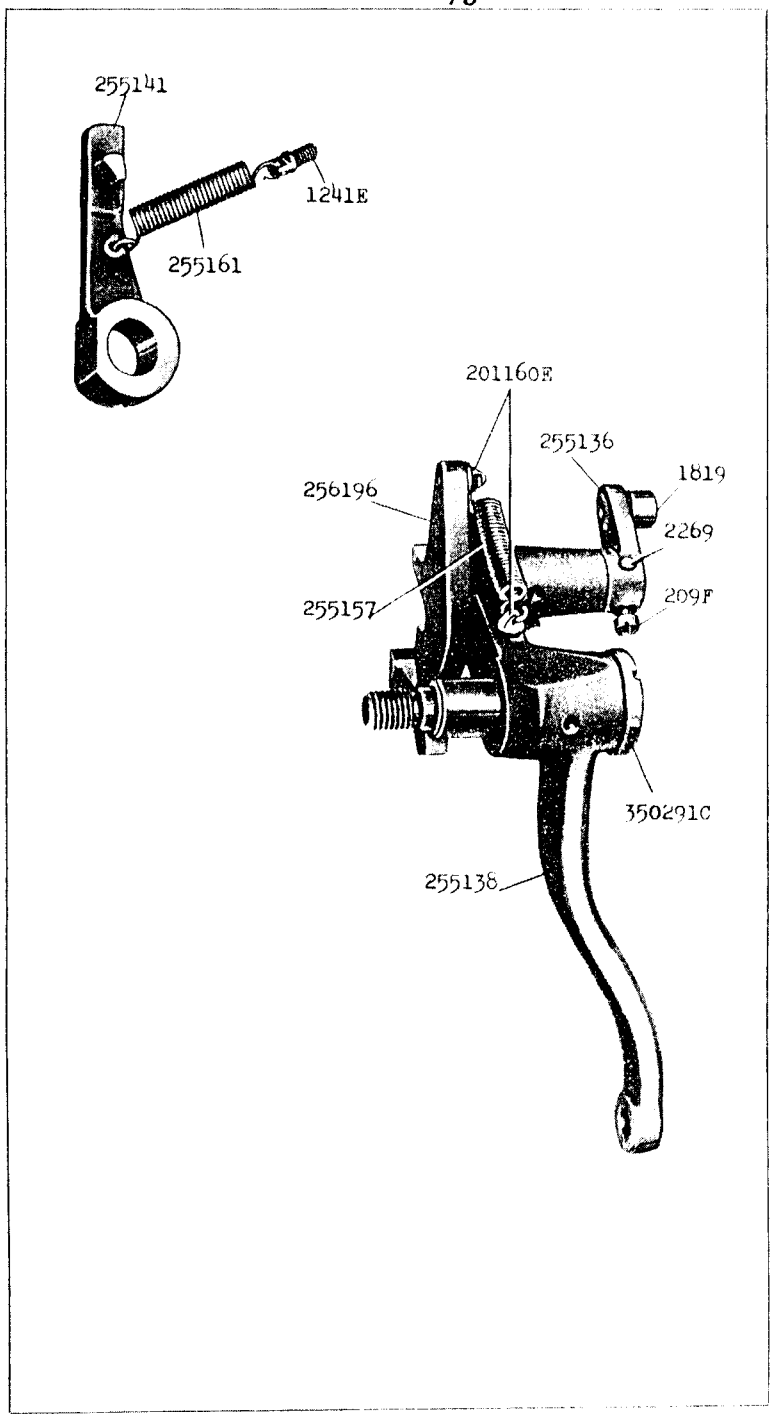

16412 - 1/2

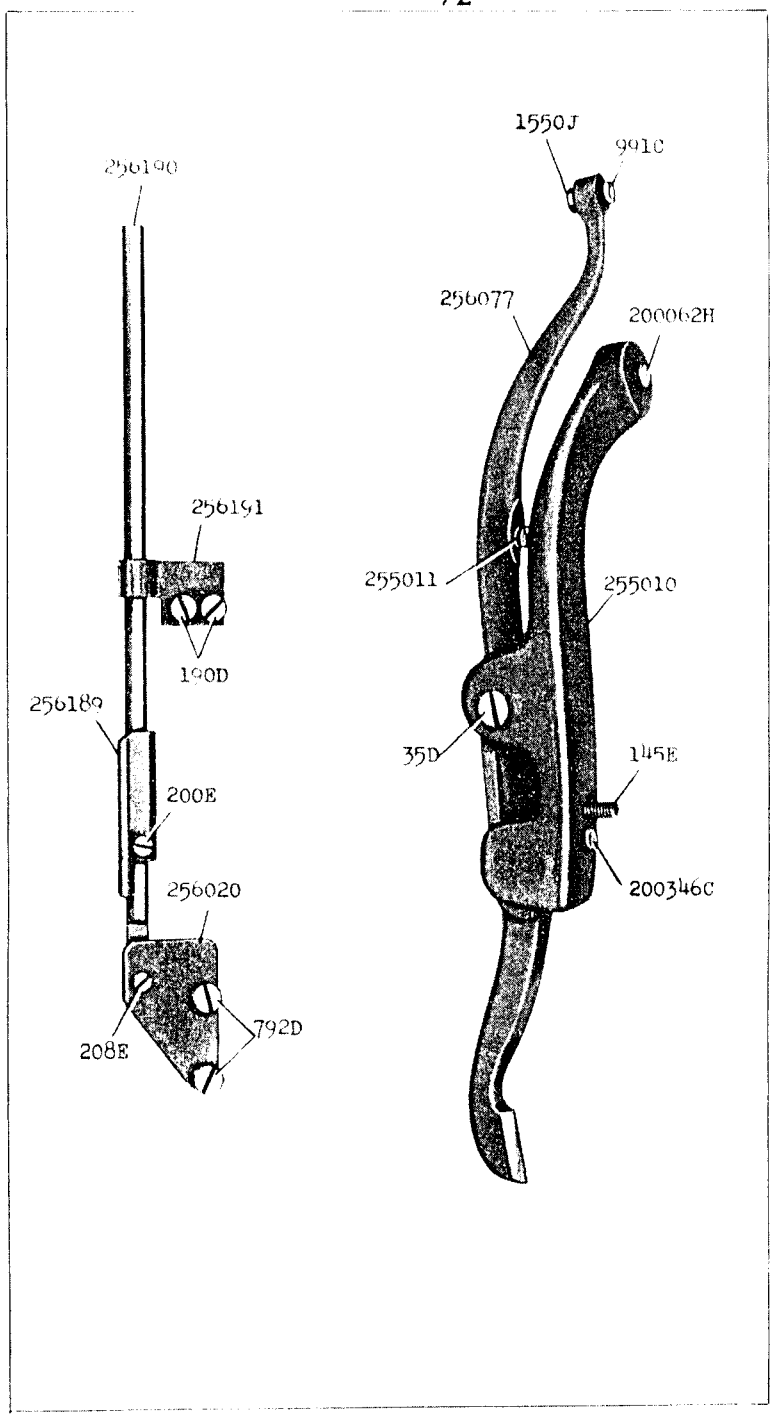

16415 - 3/8

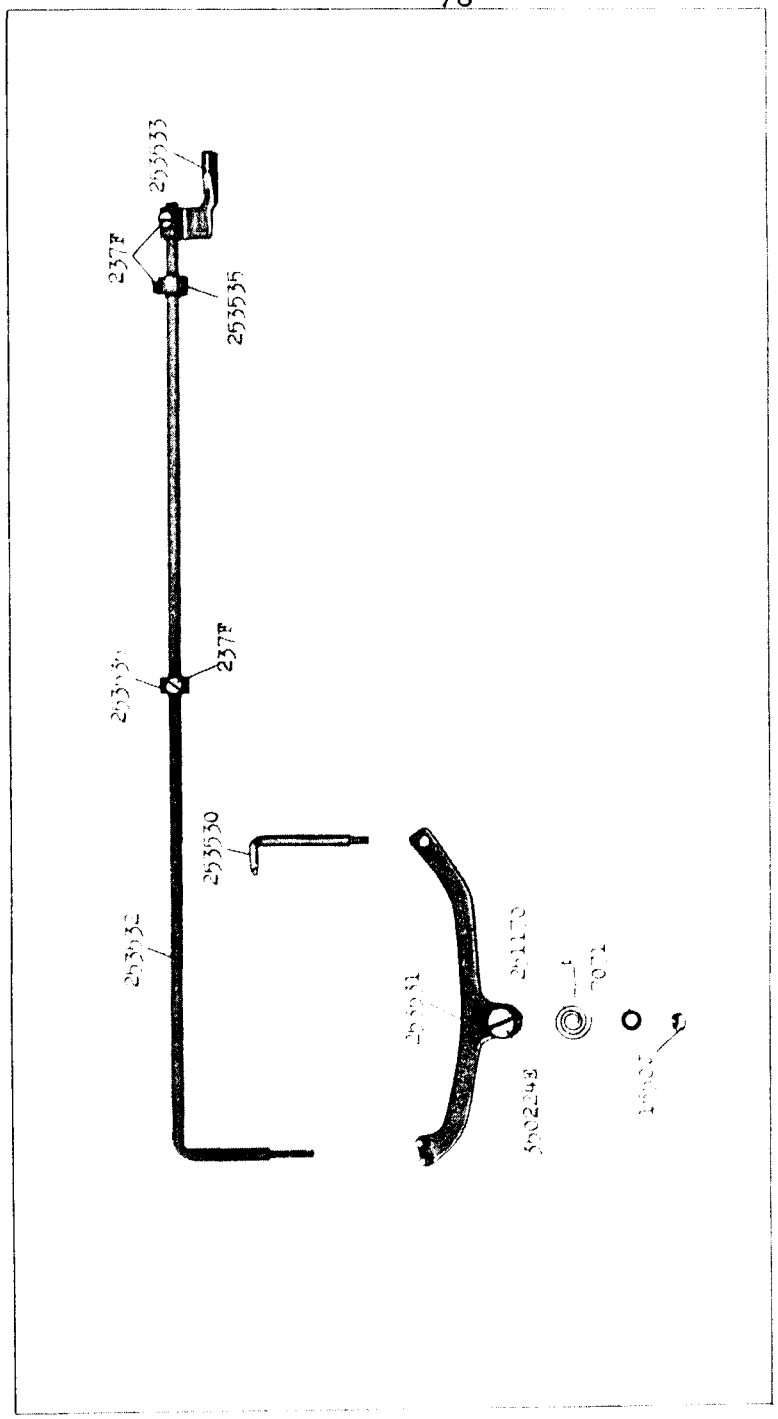

16419 - 1/2

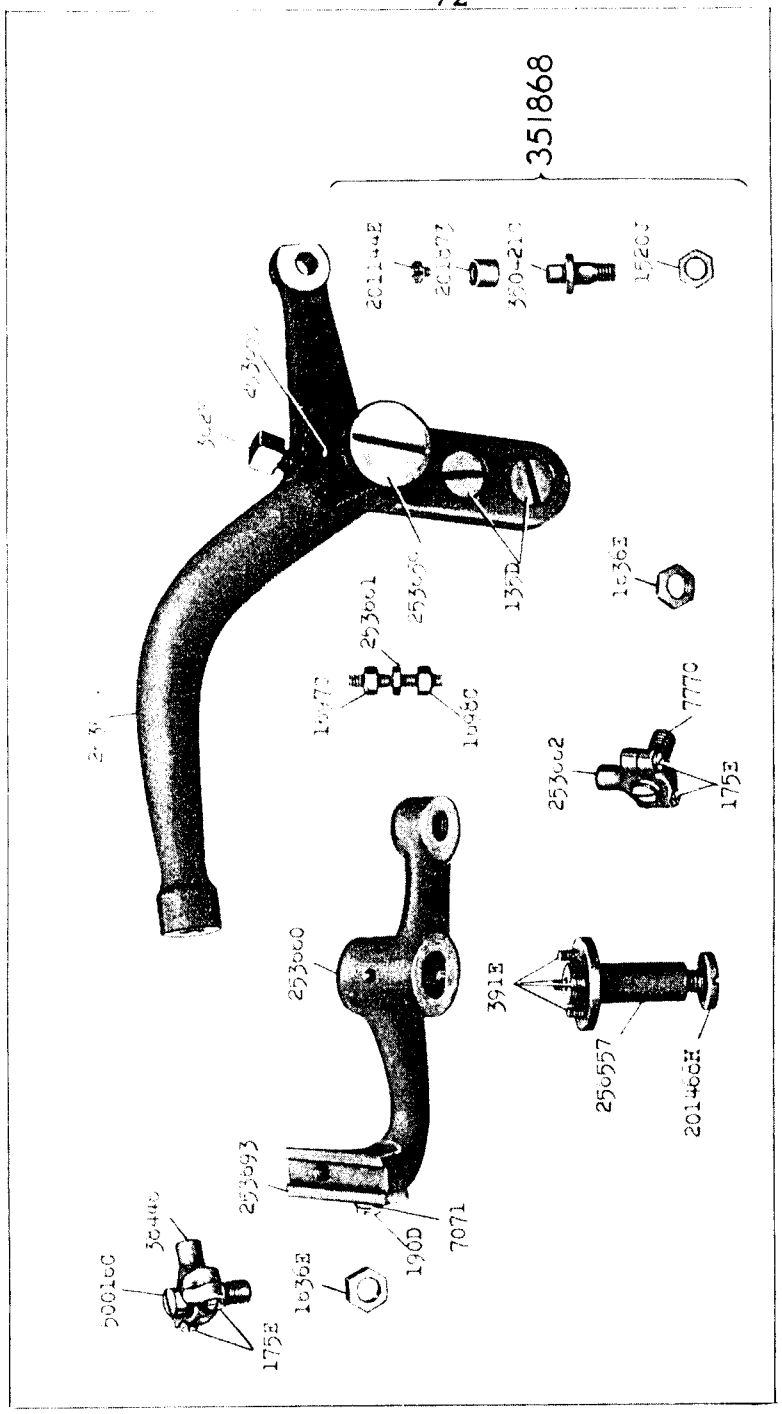

16421 - 1/2

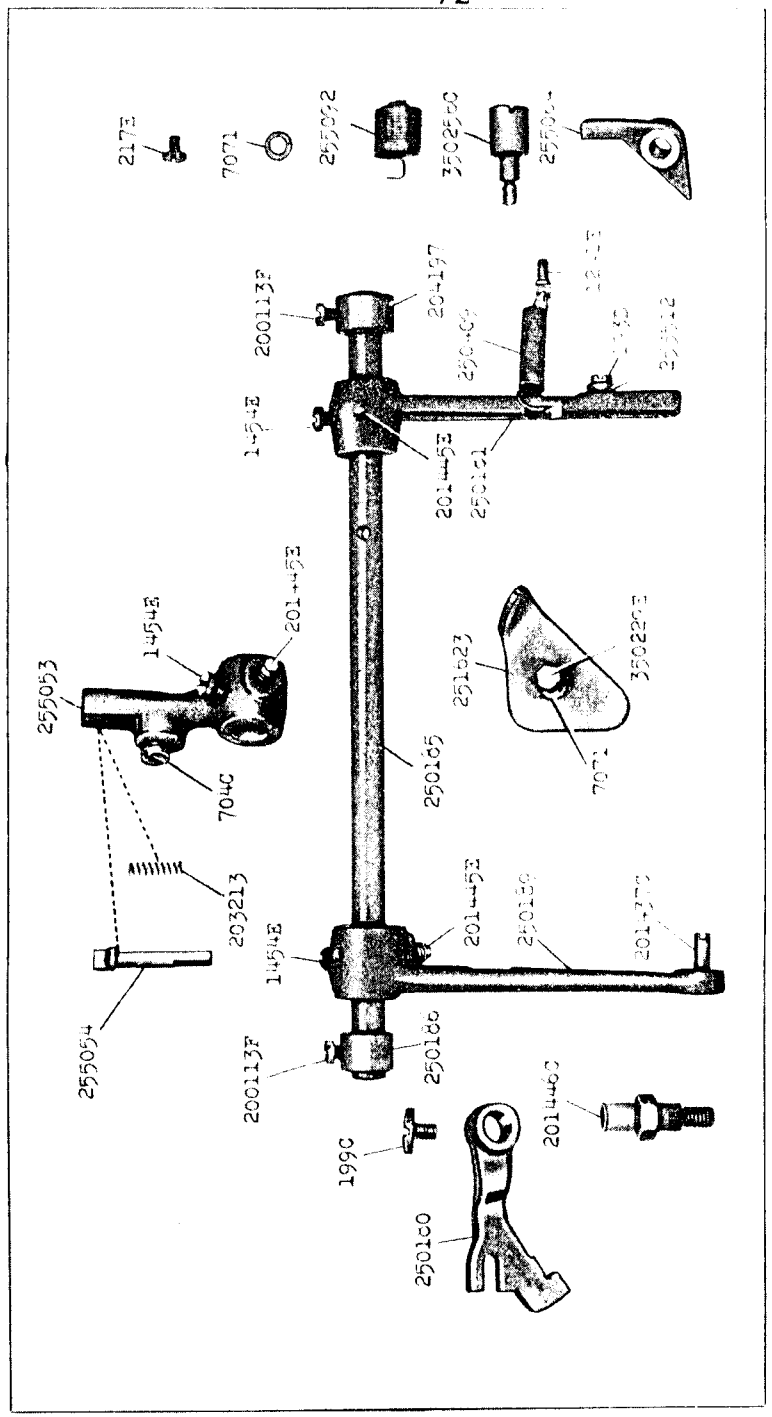

16424 - 3/8

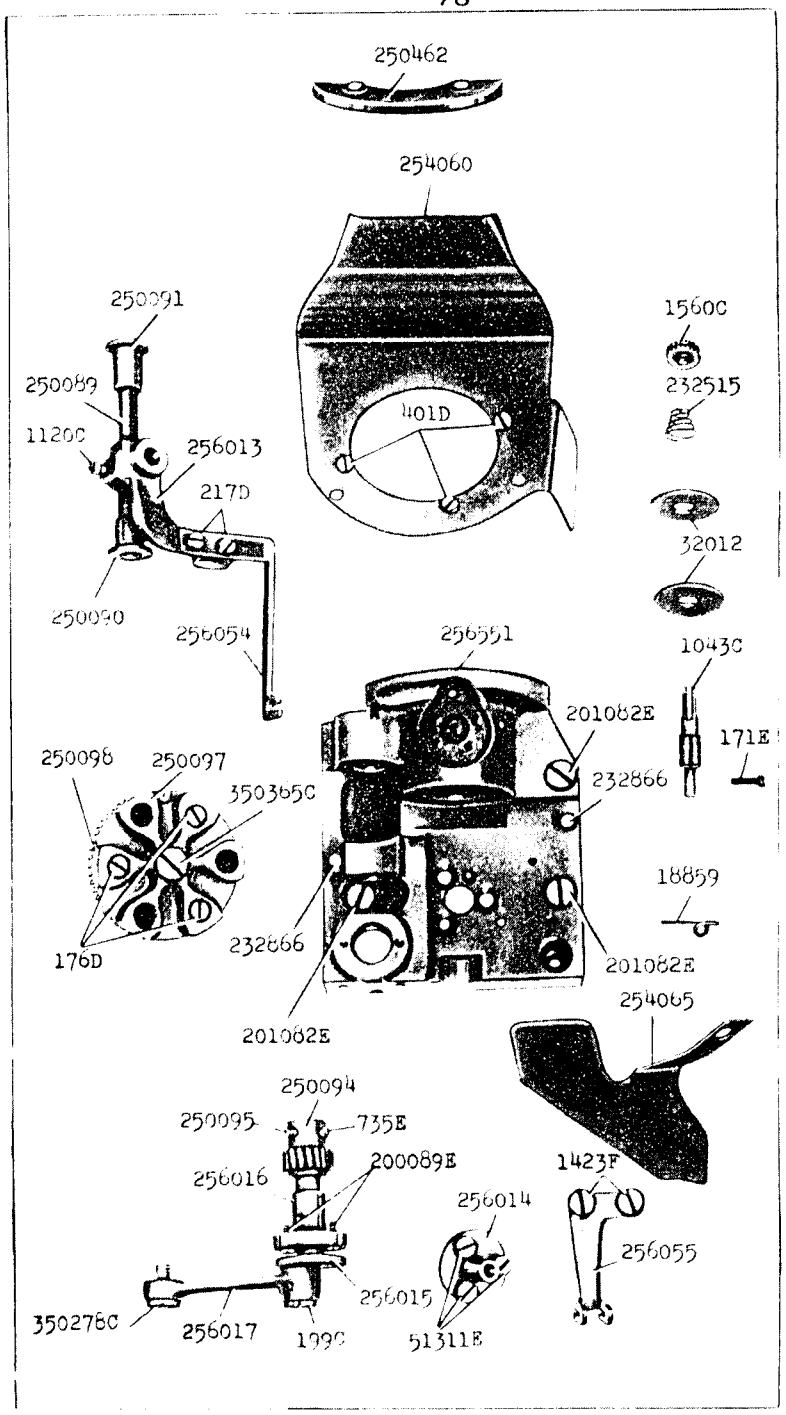

16427 - 3/8

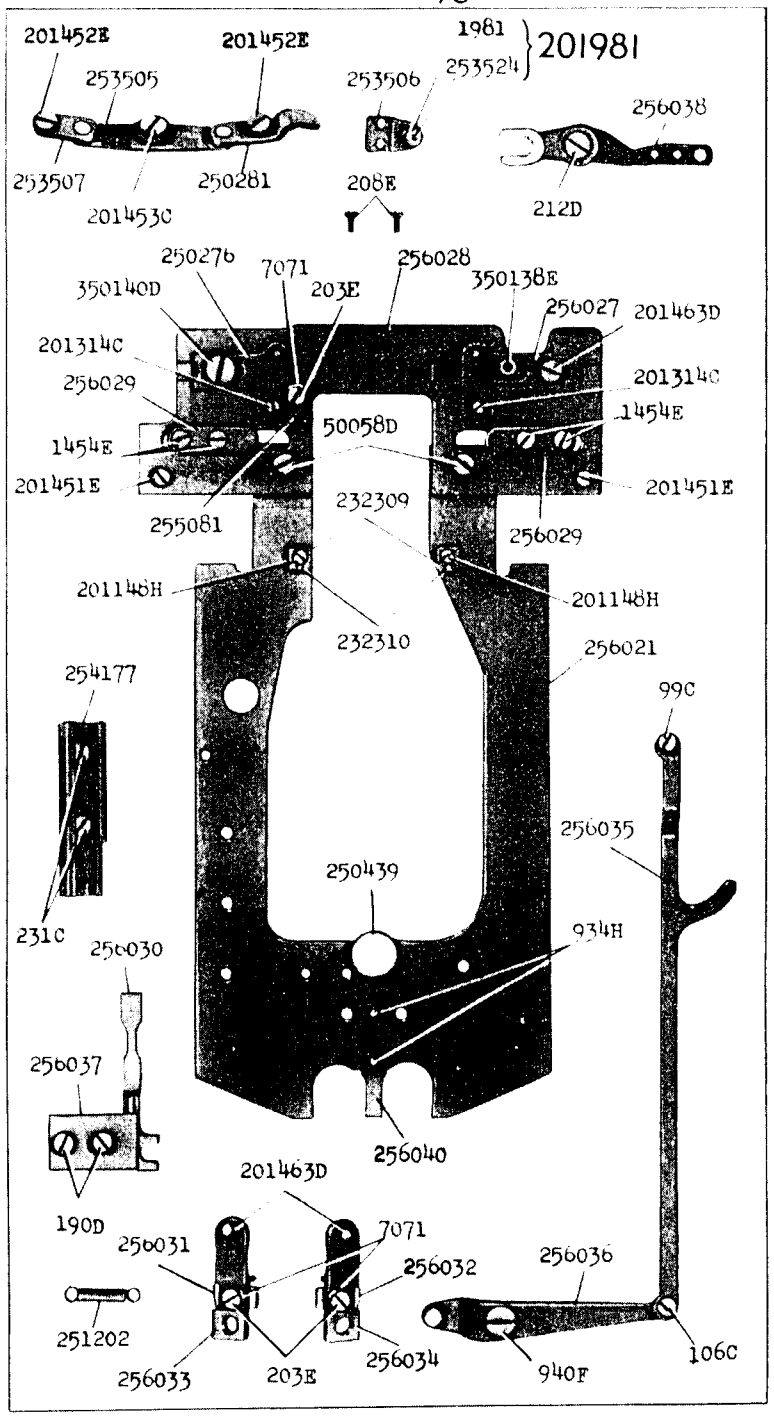

16428 - 3/8

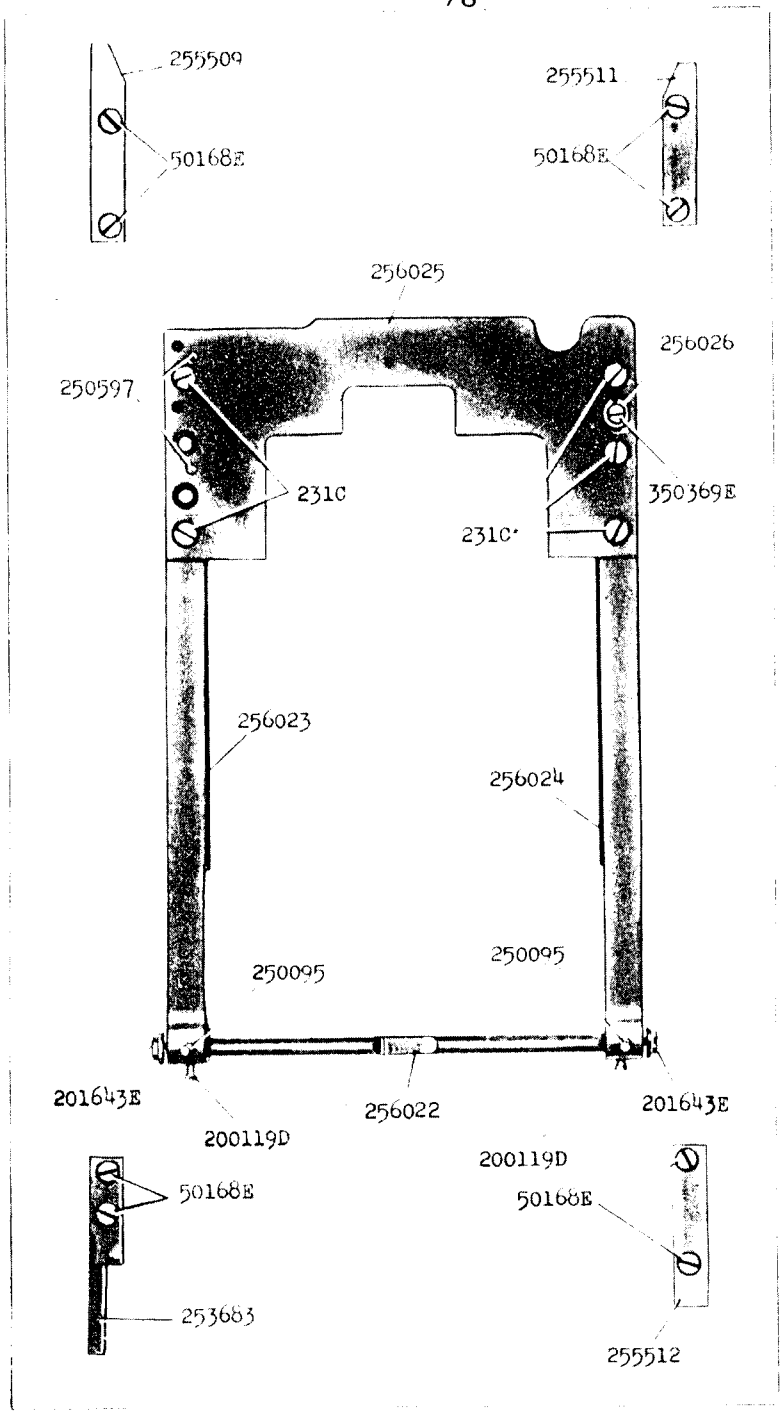

16431

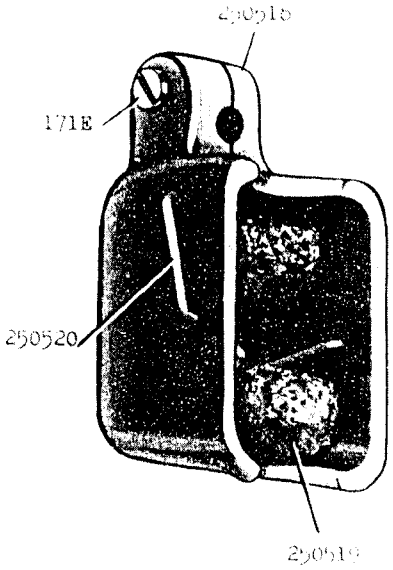

16486 - 2/3

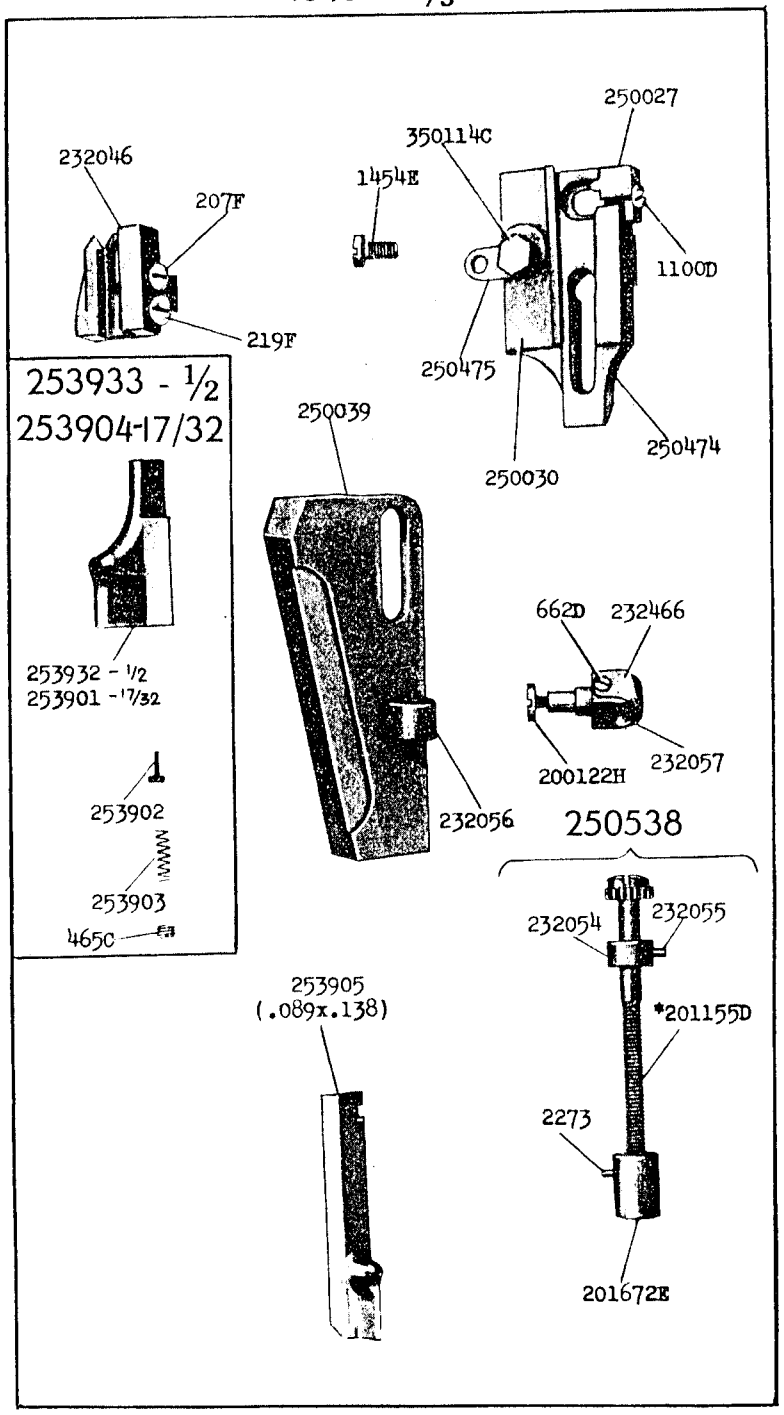

16487 - 1/3

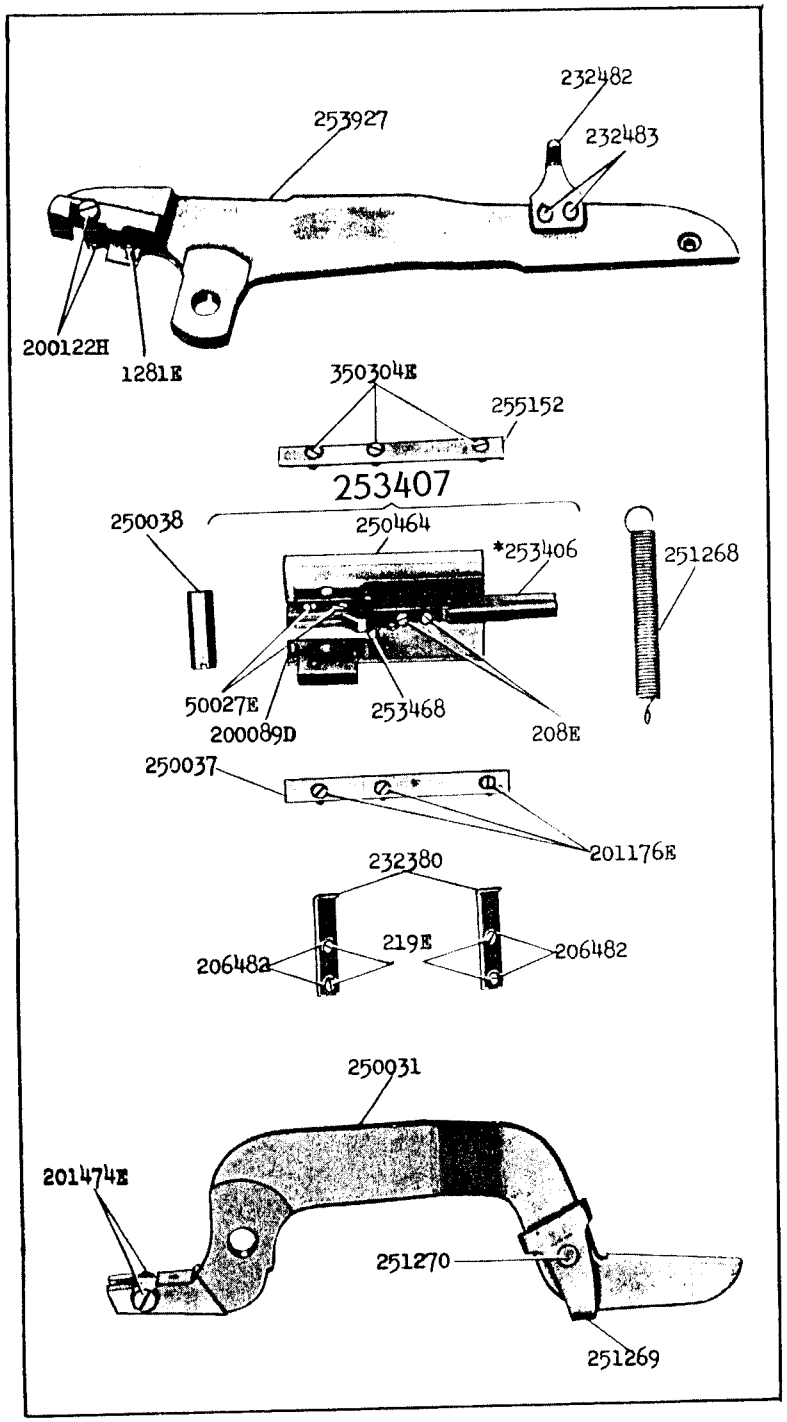

16488 - 3/8

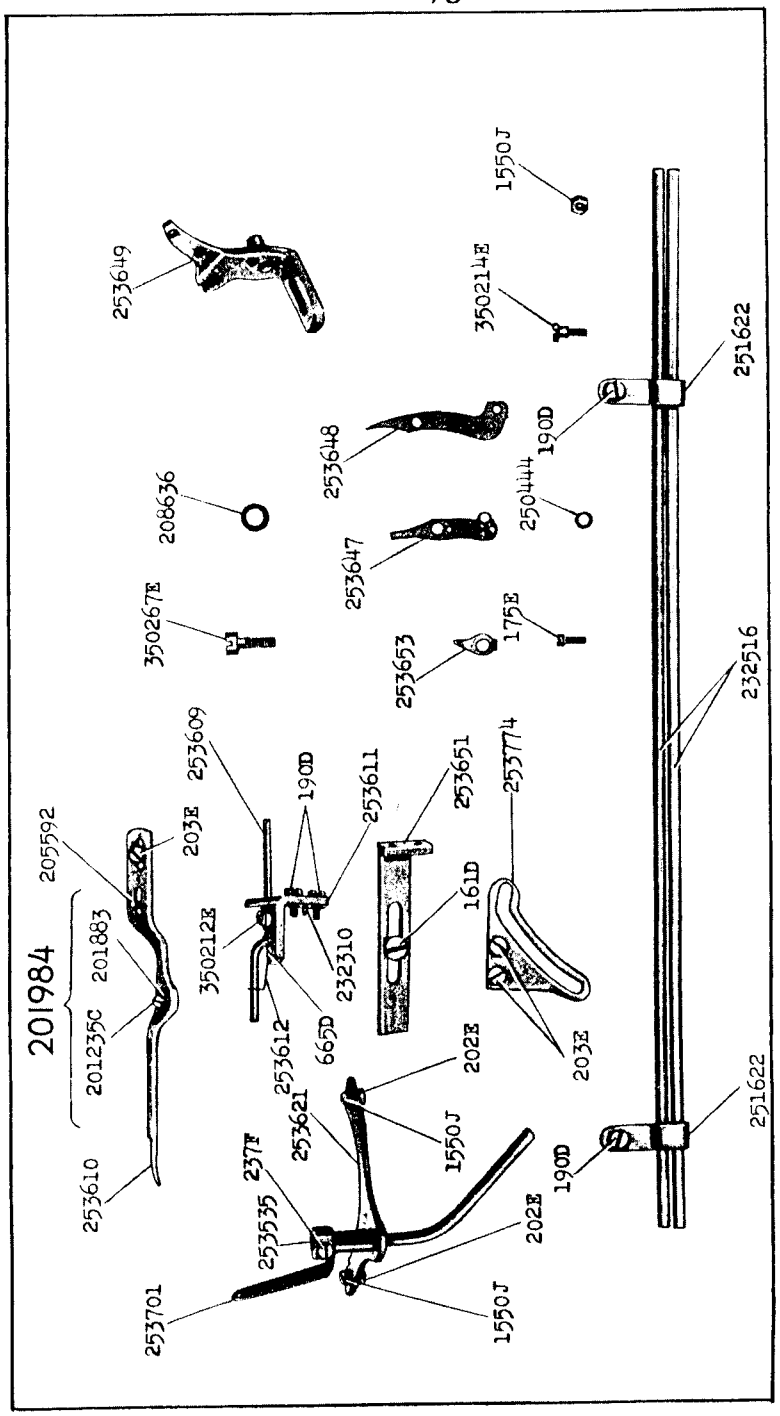

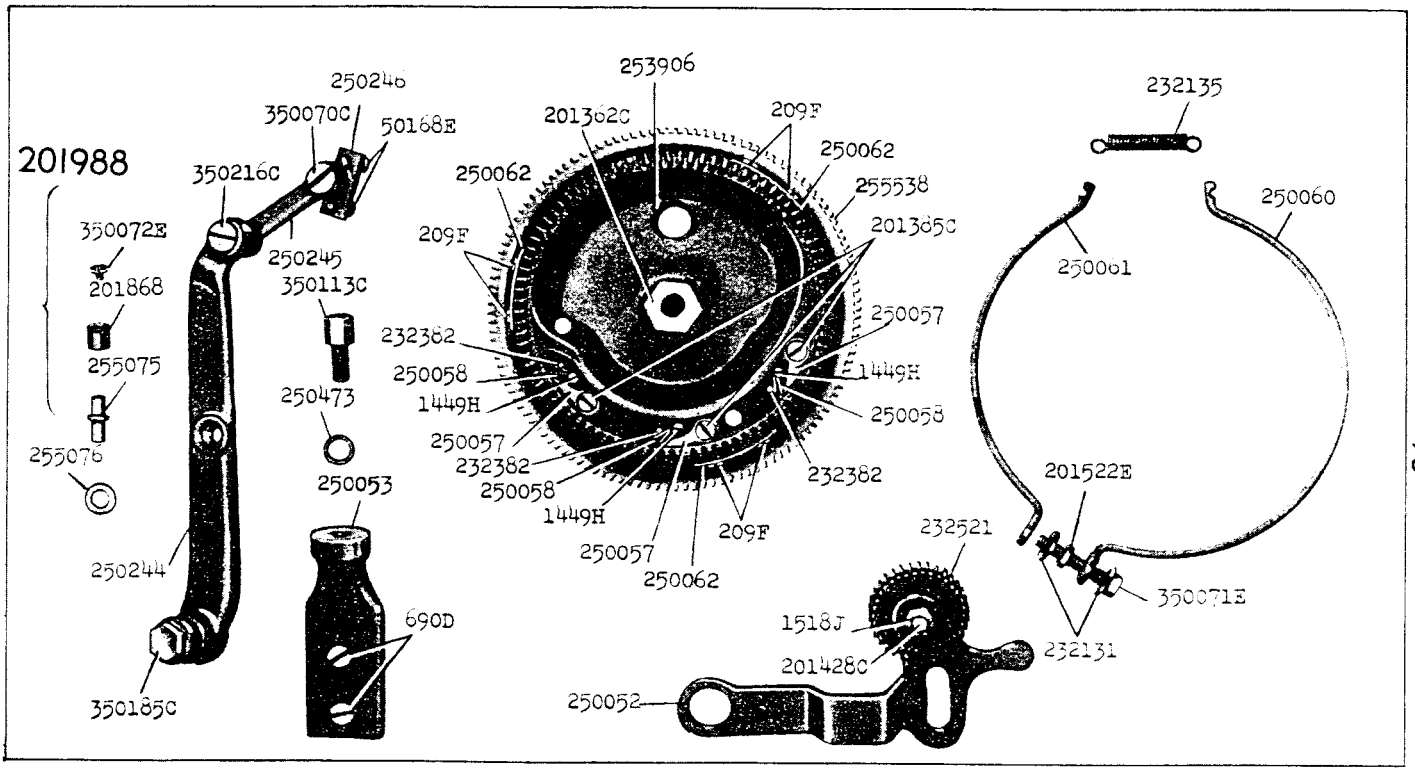

16489 - 1/3

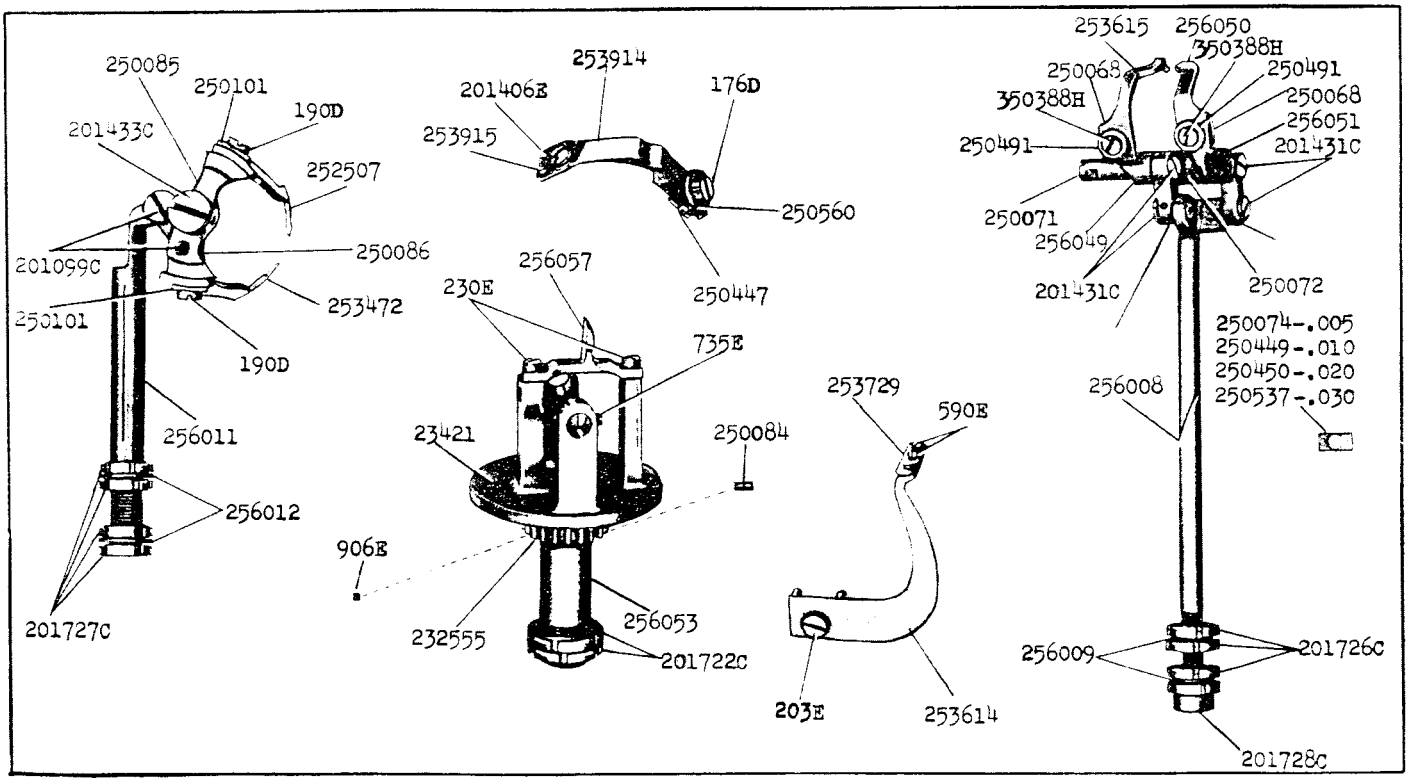

16490 - 1/2

16491 - 1/2

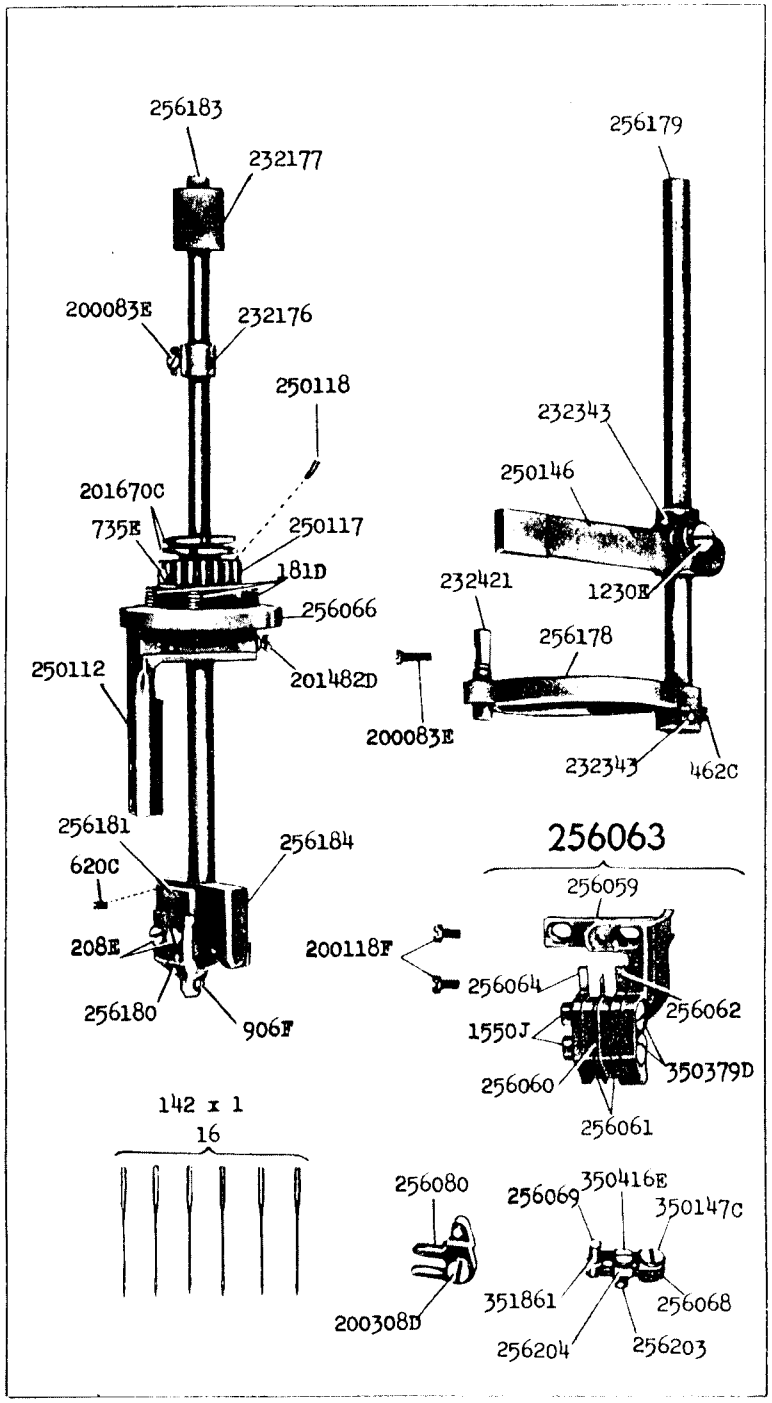

16492 - 3/8

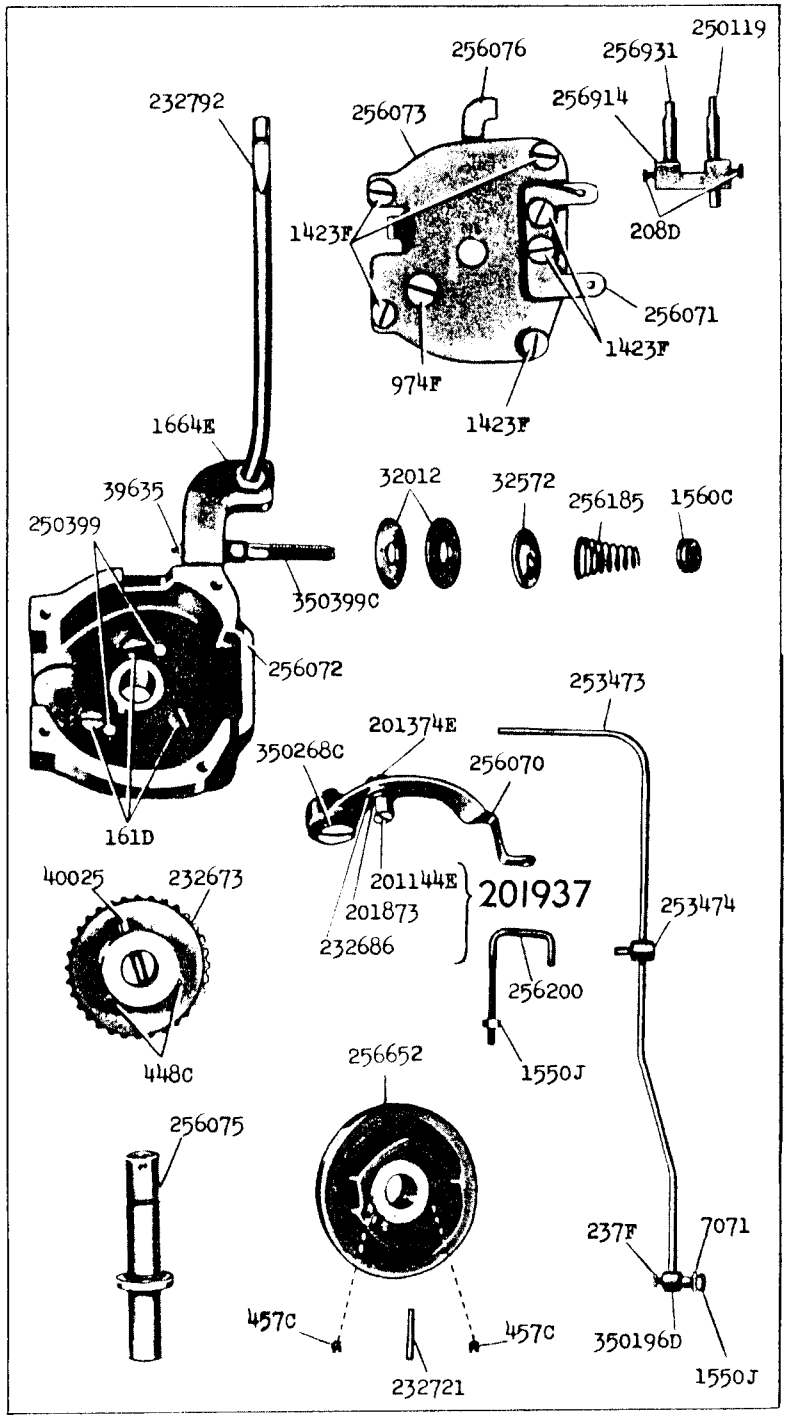

16493 - 1/2

253935 - 1/2 T.B.(S) 253913 - 17/32 T.B.(S)

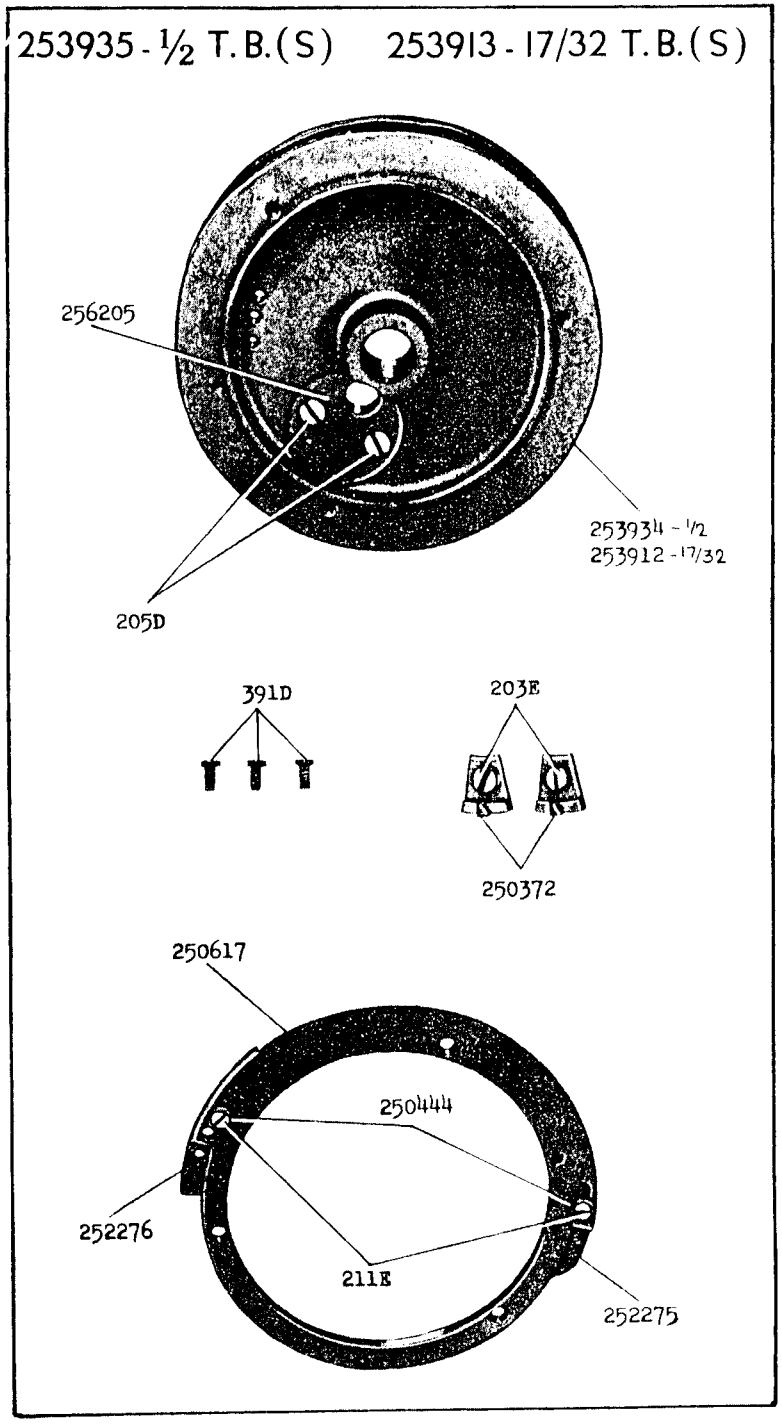

16494 - 3/8

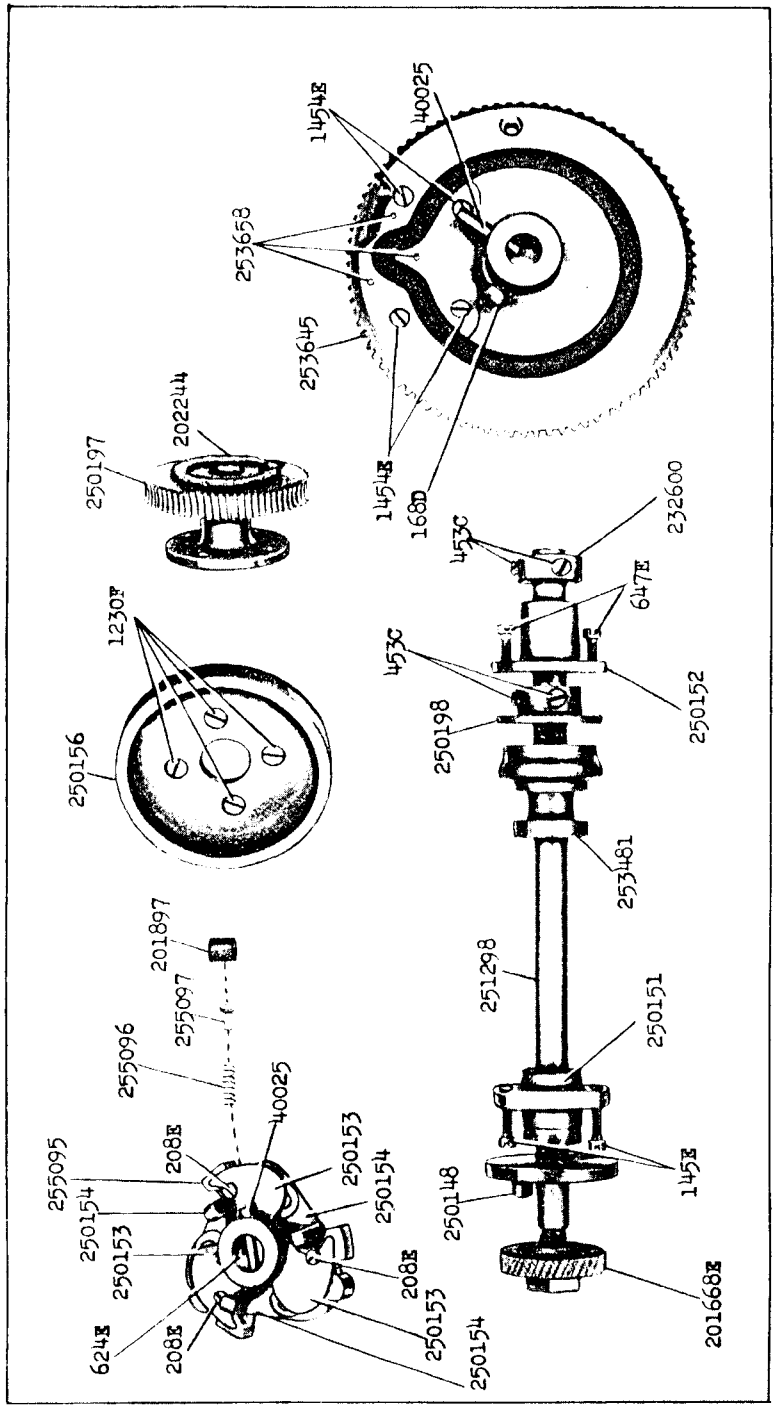

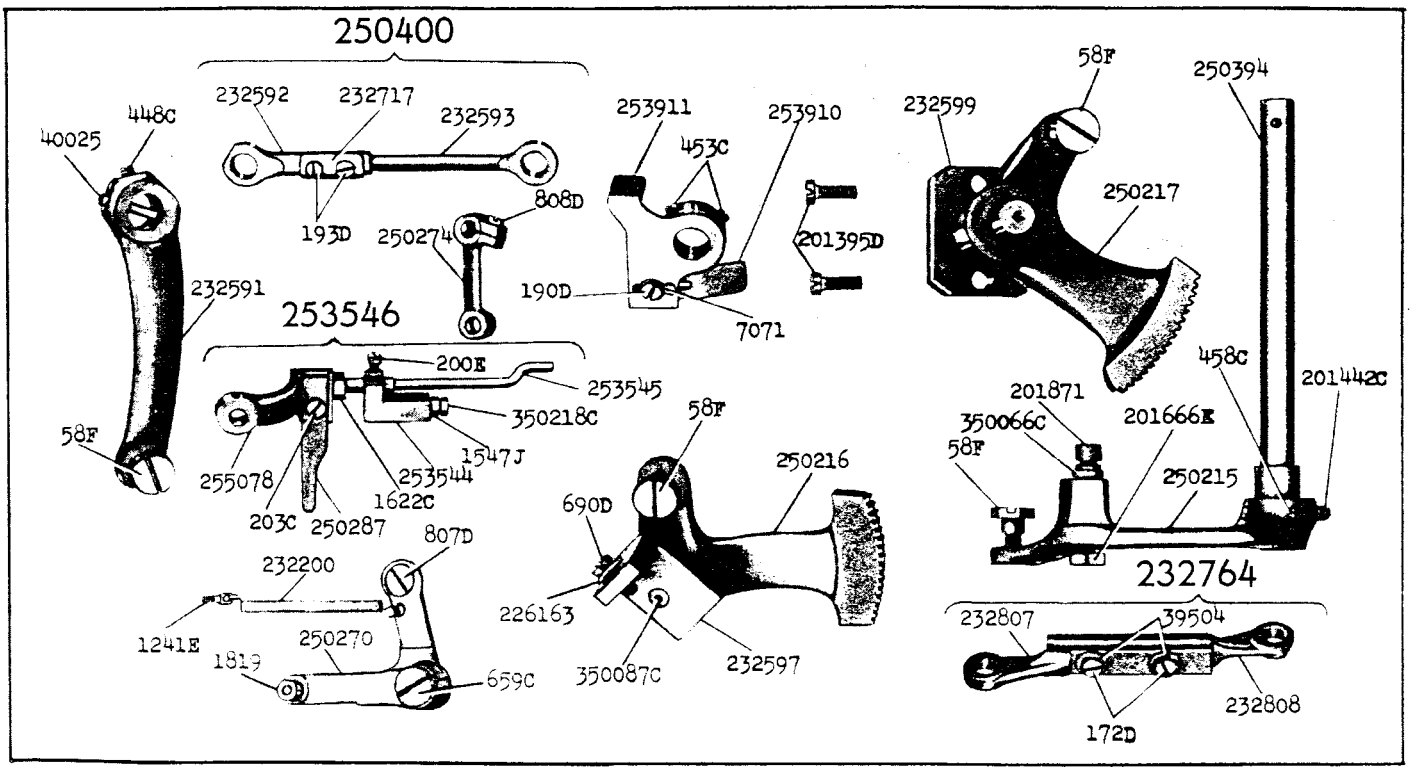

16495 - 3/8

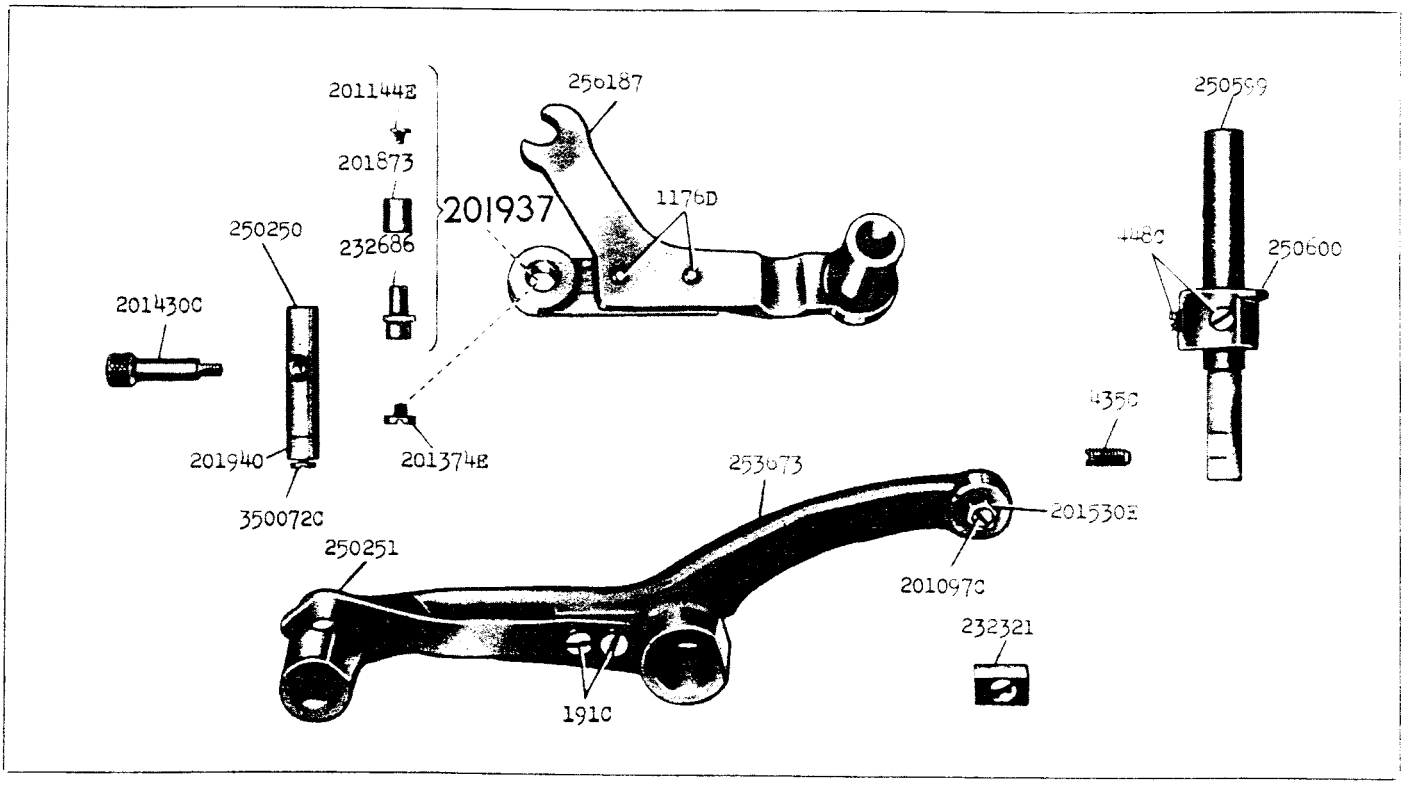

16496 - 1/2

16497

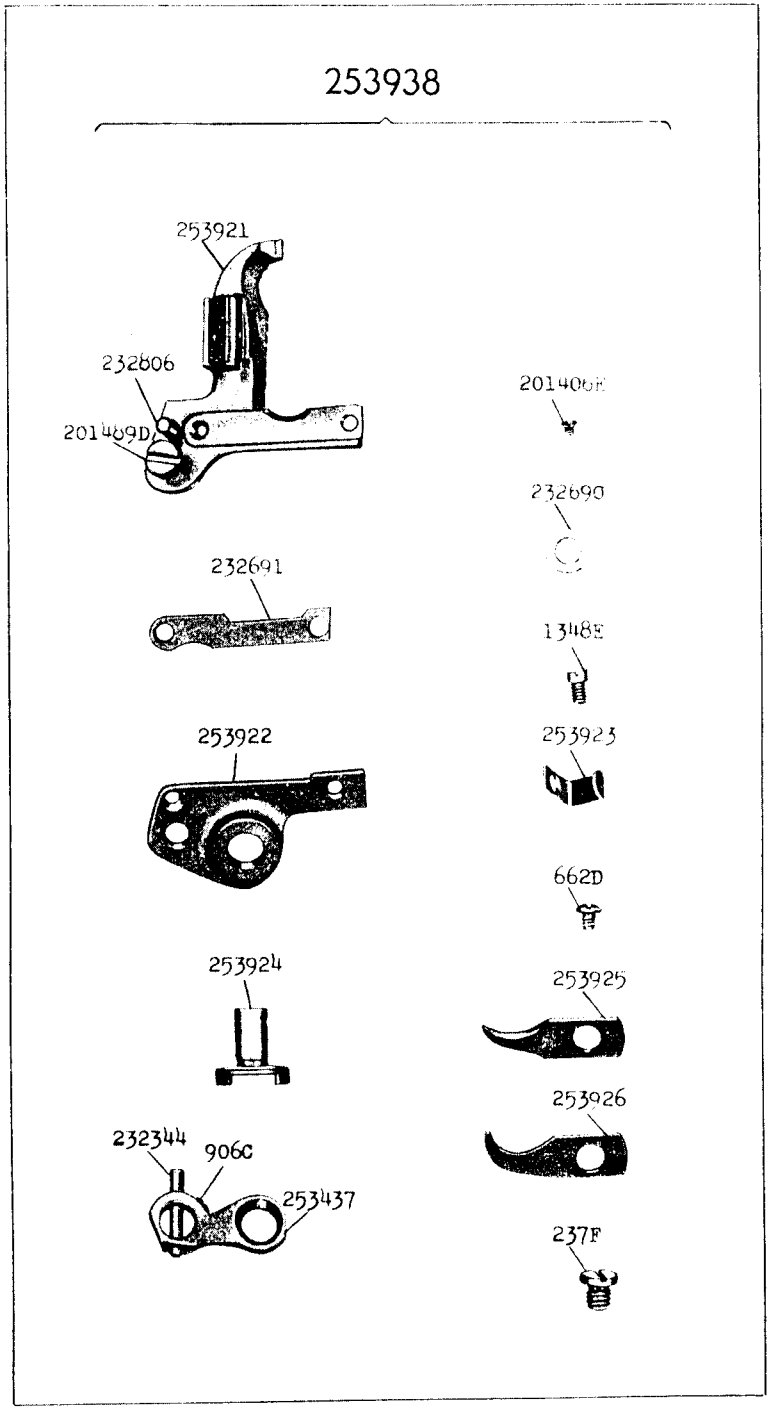

16498 - 3/8

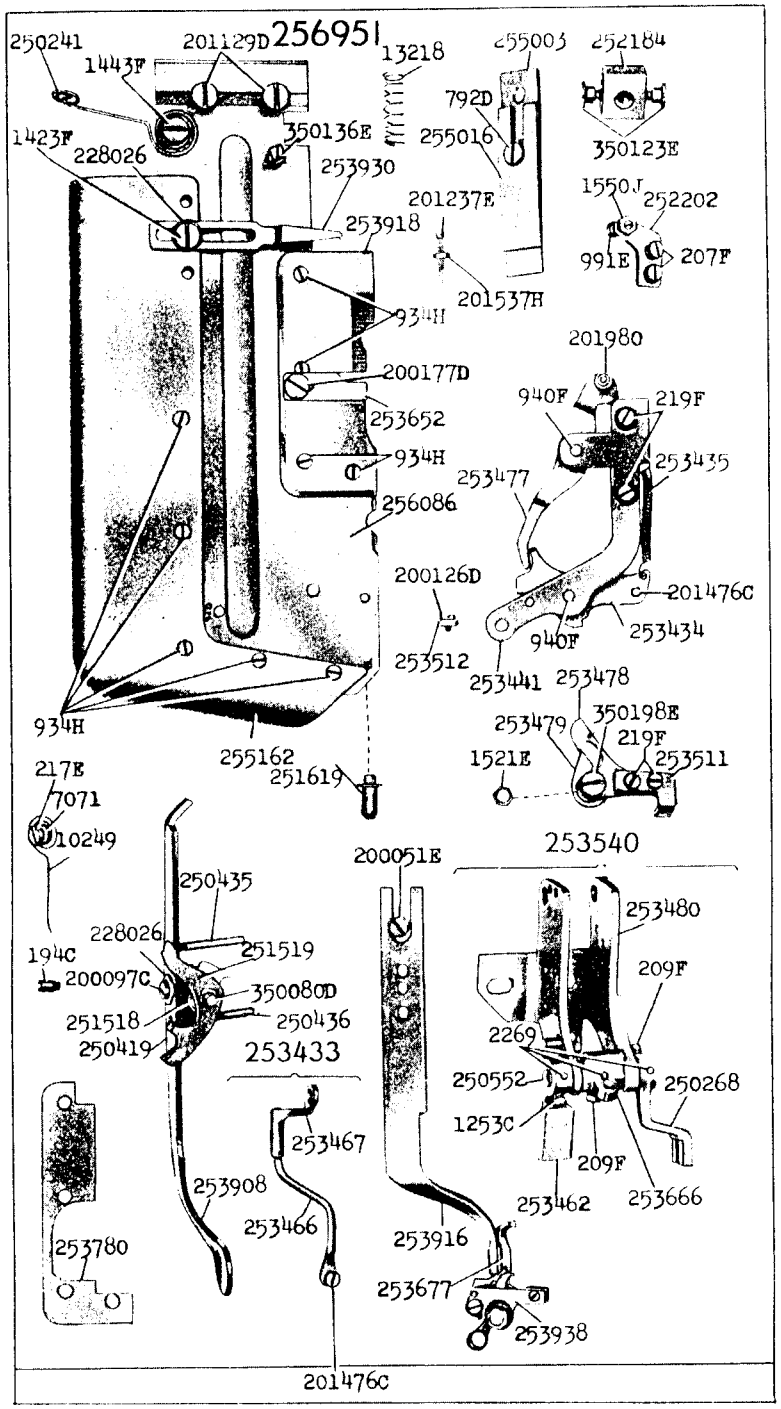

16499 - 3/8

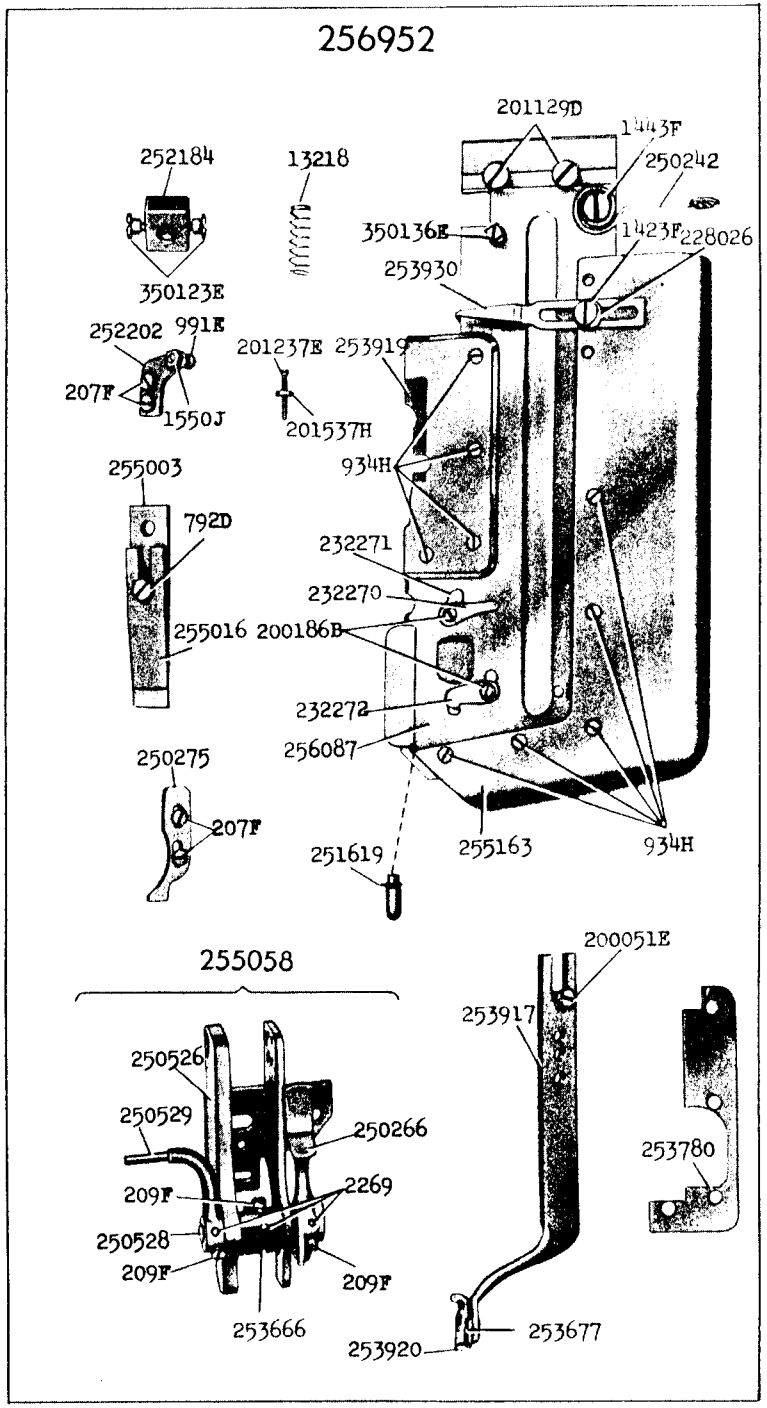
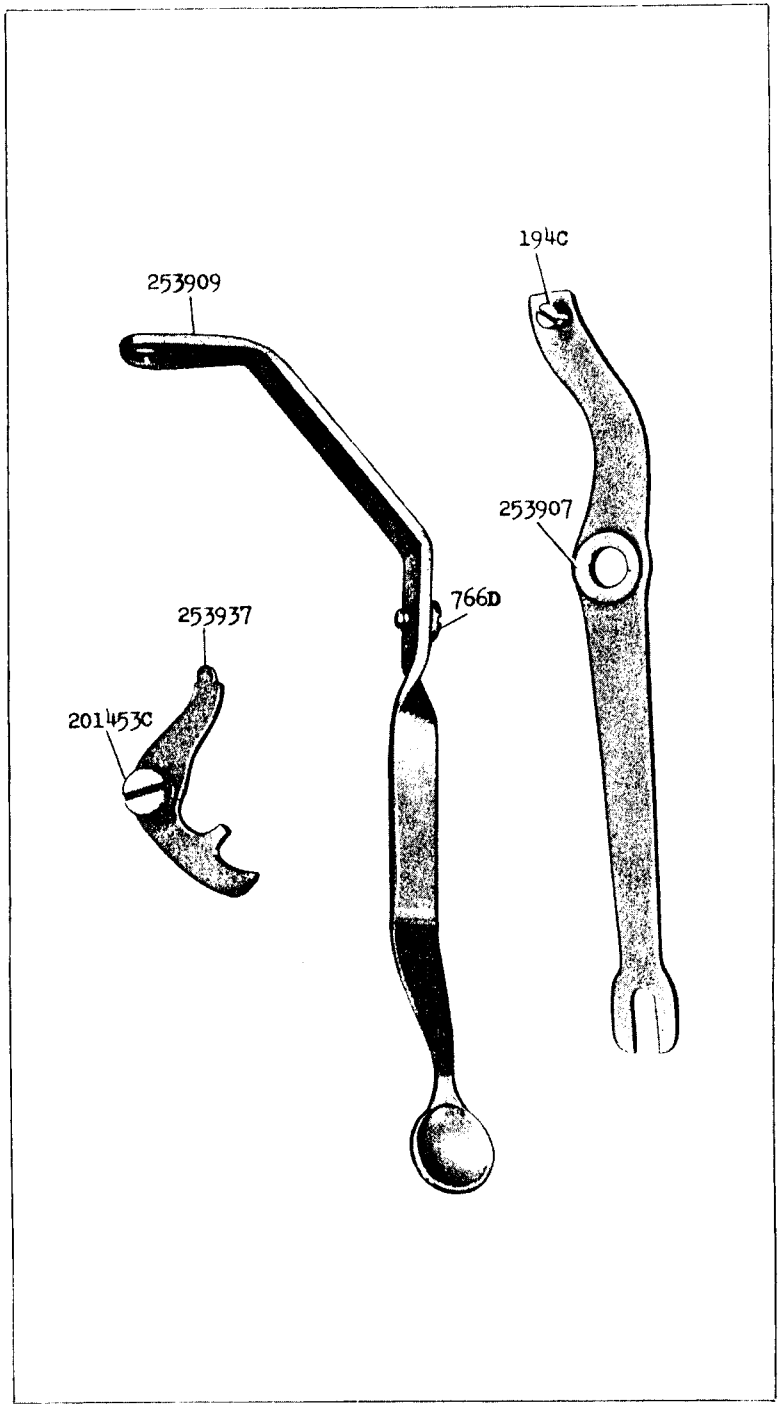
16500 - 2/3