SINGER
831U,832U

PARTS BOOK

FOR

SINGER 831U·832U

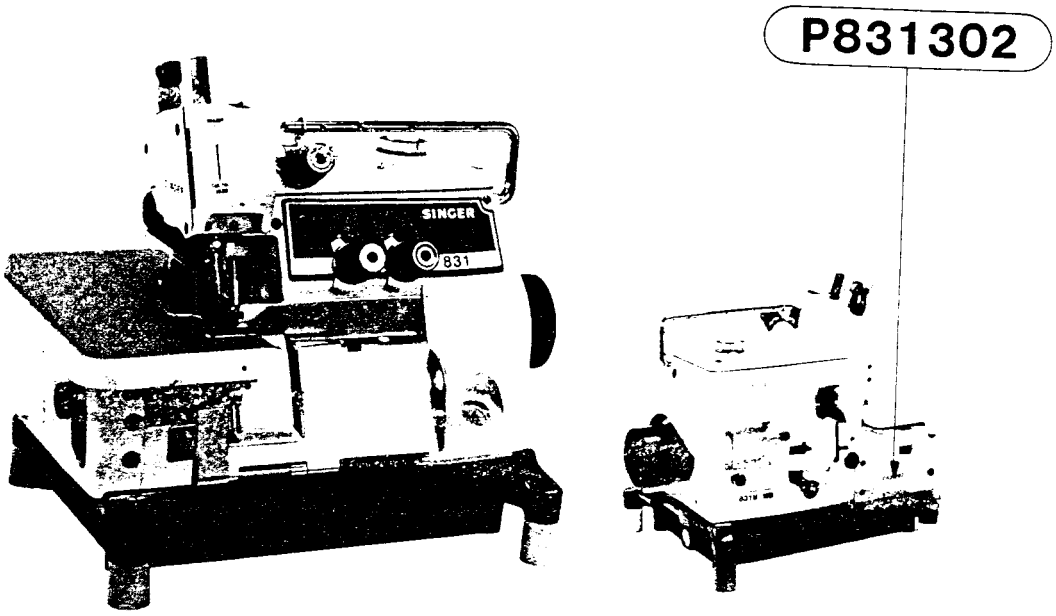

High Speed Single Needle / Two Needle Overedge Machine

THE SINGER COMPANY

How to use the parts book

1. This parts book can be used for ordering of the parts of the machine which plate number is same as shown on the upper cover of the book (or correction sheet).
2. These pages from A~H, Z, Y on this parts catalogue show all the parts for 831U-001-◯.
3. When the column for the parts number or parts assembly number is [ ], [000000-0-00] please refer to the different parts list on the page 37.
4. When the column for the parts number is [ ], the parts cannot be supplied. But when the parts assembly number is shown in the column, please order the parts by the parts assembly number so that the parts can be arranged in the form of assembled parts.
5. The parts which number is marked with ※ is not lapped together with except the parts to be fitted. Therefore, please order the parts together with the fitting parts as a unit.
6. After page 9, please refer to the different parts list on the page 37.

CONTENTS

A. 831U001-◯ Machine Body 1
B. 831U001-◯ Crank Shaft and Needle Bar Mechanism 2
C. 831U001-◯ Looper Mechanism 3
D. 831U001-◯ Feed Mechanism 4
E. 831U001-◯ Knives and Presser Foot Mechanism 5
F. 831U001-◯ Threading 6
G. 831U001-◯ Lubrication 7
H. 831U001-◯ Needle Cooler 8
I. 831U002-◯ (Bulky Knit Work) 9
J. 831U003-◯ (Blind Stitch Hemming) 9
I'. 831U004-◯ (Blind Stitch Hemming) 10
J'. 831U006-◯ (Serging) 10
M. 831U005-◯ (Serging) 11
M'. 831U010-◯ (Taping on Light, Medium Work) ... 11
K. 831U008-◯ (Ruffling) 12
L. 831U009-◯ (Ruffling (W/Piping)) 13
N. 831U011-◯ (Taping on Bulky Knit Work) 14
N'. 831U012-◯ (Chain-back) 15
K'. 831U007-◯ (Turn-down Hemming) 15
P. Cord Guide 16
Q. Ruffler Interlocking Parts Assembly 17
Y. Accessories 18
Z. Machine Base Plate and Thread Unwinder 3 THF 19
a. Common Parts for All 832U Varieties 20
b. 832U021-◯ Needle Gauge 1.8 mm (Light Work) 20
c. 832U022-◯ Needle Gauge 2.2 mm (Light and Medium Work) 21
d. 832U023-◯ Needle Gauge 2.2 mm (Light and Medium Work) 21
b'. 832U024-◯ Needle Gauge 3 mm (Light and Medium Work) 22
c'. 832U025-◯ Needle Gauge 3 mm (Light and Medium Work) 22
d'. 832U026-◯ Needle Gauge 1.8 mm (Bulky Knit Work) 23
e. 832U027-◯ Needle Gauge 2.2 mm (Bulky Knit Work) 24
e'. 832U028-◯ Needle Gauge 2.2 mm (Bulky Knit Work) 25
f. 832U031-◯ Needle Gauge 3 mm (Extra Heavy Work) 26
f'. 832U032-◯ Needle Gauge 3 mm (Extra Heavy Work) 27
g. 832U033-◯ Needle Gauge 2.2 mm (Ruffling) 28
g'. 832U034-◯ Needle Gauge 2.2 mm (Ruffling) 29
h. 832U037-◯ Needle Gauge 2.2 mm (Ruffling (W/Piping)) 30
h'. 832U038-◯ Needle Gauge 2.2 mm (Ruffling (W/Piping)) 31
j. 832U041-◯ Needle Gauge 2.2 mm (Taping on Light, Medium Work) ... 32
k. 832U045-◯ Needle Gauge 2.2 mm (Taping on Bulky Knit Work) 33
m. 832U049-◯ Needle Gauge 2.2 mm (Chain-back) 34
n. 832U050-◯ Needle Gauge 2.2 mm (Piping) 35
z. Thread Unwinder 4 THF 36
DIFFERENT PARTS LIST 37
INDEX 45

A. 831U001-◯ Machine Body

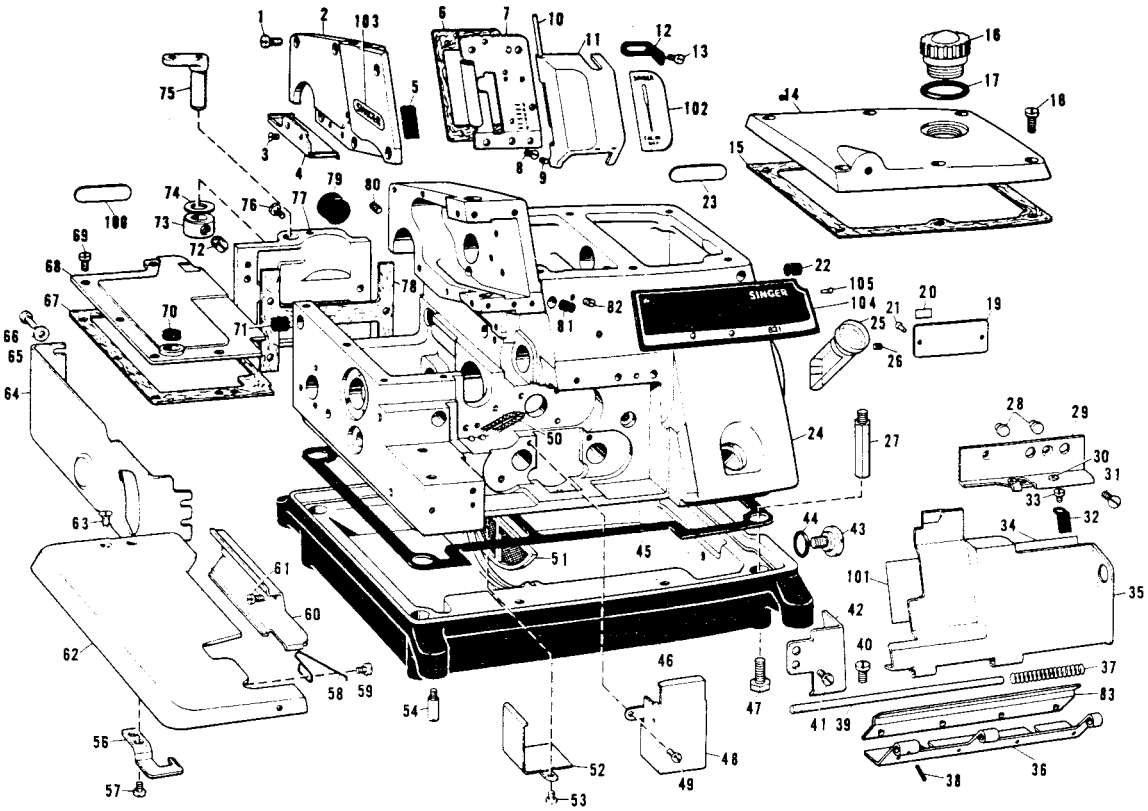

Ref. No.	Name of Parts	Q'ty	Parts No.	Assembly No.
A- 1	Screw	6	009680-7-12	
A- 2	Cover for Needle Driving Mechanism	1	146422-0-01	
A- 3	Screw	2	108960-0-02	
A- 4	Cloth Guide (S)	1	146461-0-01	
A- 5	Rubber Cap	1	143992-0-01	
A- 6	Face Plate Gasket	1	146433-0-00	
A- 7	Face Plate	1	146428-0-01	
A- 8	Screw	3	102843-0-04	
A- 9	Screw	1	146427-0-01	
A-10	Pin for Face Plate	1	146426-0-00	
A-11	Face Plate Cover	1	146425-0-01	
A-12	Stopper Spring	1	146432-0-01	
A-13	Screw	2	009670-6-12	
A-14	Top Cover	1	146419-0-01	
A-15	Gasket	1	146420-0-00	
A-16	Oil Filler Cap and Flow Indicator	1	146421-0-00	
A-17	Gasket	1	113589-0-01	
A-18	Screw	6	009681-2-12	
A-19	Model Plate 831U	1		
A-20	Label	1		
A-21	Model Plate Pin	2		
A-22	Oil Cap	1	146315-0-00	
A-23	Name Plate	1		
A-24	Machine Body	1		
A-25	Oil Gauge	1	148084-0-01	
A-26	Screw	1	014680-4-22	
A-27	Machine Body Leg	4	151059-0-01	
A-28	Oil Cap	2	111865-0-01	
A-29	Supporter for Front Cover	1		146713-0-01
A-30	Thread Bushing	2	146924-0-00	
A-31	Screw	2	117160-0-01	
A-32	Stopper Spring for Front Cover	1	146446-0-01	
A-33	Screw	1	123185-0-01	
A-34	Threading Diagram	1	146718-0-01	
A-35	Front Cover	1		
A-36	Front Cover Hinge	1	146440-0-01	
A-37	Spring	1	146442-0-01	
A-38	Pin	1	047140-8-42	148991-0-01
A-39	Front Cover Hinge Pin	1	146441-0-00	
A-83	Hinge Cover	1	148984-0-01	
A-40	Screw	2	107407-0-03	
A-41	Screw	2	009670-6-12	
A-42	Front Cover Guide	1	146712-0-01	

Ref. No.	Name of Parts	Q'ty	Parts No.	Assembly No.
A-43	Screw	1	110641-0-01	
A-44	"O" Ring	1	109203-0-01	
A-45	Gasket	1	151060-0-00	
A-46	Oil Reservoir	1	146458-0-02	
A-47	Screw	4	017771-6-12	
A-48	Inside Cover	1	146436-0-01	
A-49	Screw	2	009670-6-12	
A-50	Wick	1	147361-0-00	
A-51	Oil Filter	1	145664-0-00	
A-52	Oil Stopper Plate	1	146457-0-01	
A-53	Screw	2	009670-6-12	
A-54	Set Pin for Cushion	4	140077-0-01	
A-56	Stopper for Cloth Plate	1	146449-0-01	
A-57	Screw	2	001670-5-12	
A-58	Spring	1	146450-0-01	
A-59	Screw	1	001670-5-12	
A-60	Cloth Guide (L)	1	146460-0-01	
A-61	Screw	2	009670-6-12	
A-62	Cloth Plate	1	146448-0-01	
A-63	Screw	2	100032-0-03	
A-64	Cloth Plate Lower	1	146717-1-01	
A-65	Washer	4	113431-0-02	
A-66	Screw	4	009680-7-12	
A-67	Gasket	1	146709-0-00	
A-68	Cover for Feed Mechanism	1	146708-0-00	
A-69	Screw	5	009680-7-12	
A-70	Cloth Plate Cushion (B)	1	111486-0-01	
A-71	Oil Cap	1	146315-0-00	
A-72	Screw	2	101706-0-01	
A-73	Set Collar	1		181969-0-03
A-74	Washer	1	141183-0-00	
A-75	Cloth Plate Supporter	1	143374-0-01	
A-76	Screw	4	009681-0-12	
A-77	Cover for Feed Mechanism (B)	1	146704-0-01	
A-78	Gasket	1	146705-0-00	
A-79	Oil Cap	1	140066-0-01	
A-80	Screw	2	013760-6-12	
A-81	Oil Cap	1	140421-0-01	
A-82	Screw	1	013689-4-12	
A-100	Label	1		
A-101	Label	1	147943-0-01	
A-102	Label	1		
A-103	Label	1		
A-104	Name Plate F	1		
A-105	Name Plate F Pin	2		

NOTE! PREFIX ALL NUMBERS BY 'BR'.
EXAMPLE BR146222-0-01

B. 831U001-◌ Crank Shaft and Needle Bar Mechanism

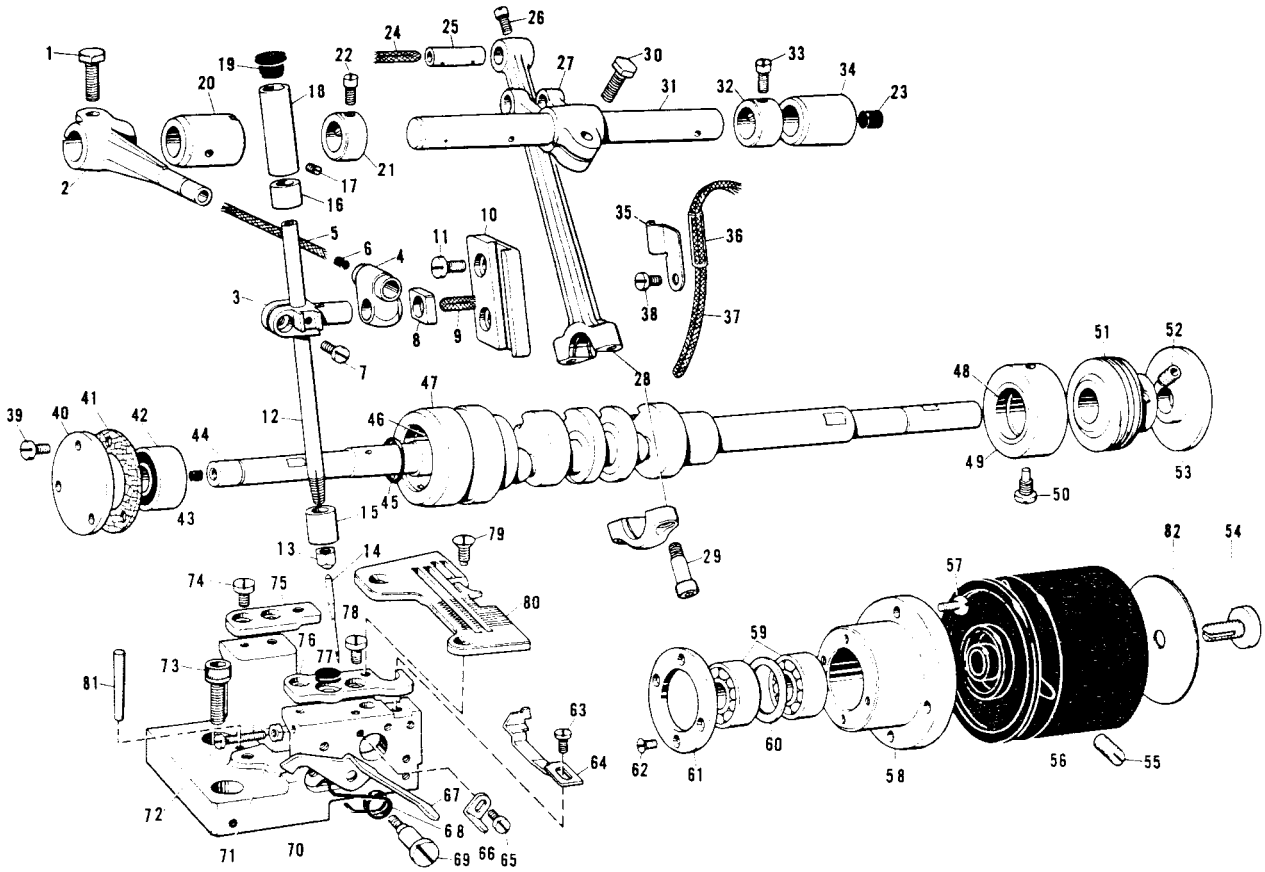

Ref. No.	Name of Parts	Q'ty	Parts No.	Assembly No.
B- 1	Screw	1	017771-6-12	146480-0-01
B- 2	Needle Arm	1	146481-0-01	
B- 3	Needle Bar Clamp	1	146482-0-01	
B- 4	Needle Bar Connector	1	140096-0-01	
B- 5	Wick	1	140418-0-00	
B- 6	Oil Cap	1	140326-0-01	
B- 7	Screw	1	009670-8-12	
B- 8	Needle Bar Guide Slide Block	1	105078-0-01	
B- 9	Wick	2	140415-0-00	
B-10	Needle Bar Guide	1	105079-0-01	
B-11	Screw	2	009680-7-12	
B-12	Needle Bar	1		147629-0-01
B-13	Needle Clamp Nut	1	147631-0-01	
B-14	Needle Cat. No. 6120 #11	1	151200-0-11	
B-15	Needle Bar Bushing (D)	1	146486-0-00	
B-16	Needle Bar Bushing (U)	1	146485-0-00	
B-17	Screw	1	013679-4-12	
B-18	Needle Bar Cap	1	146484-0-01	
B-19	Cap	1	114255-0-02	
B-20	Needle Shaft Bushing (Left)	1	140093-0-00	
B-21	Set Collar	1	140092-0-01	
B-22	Screw	2	100366-0-01	
B-23	Oil Cap	1	140327-0-01	
B-24	Wick	1	140320-0-00	
B-25	Pin	1	140088-0-01	※ 146476-1-01
B-26	Screw	1	100366-0-01	
B-27	Needle Arm Driving Lever	1	146478-0-01	
B-28	Needle Arm Driving Crank Rod	1		
B-29	Screw	2	148425-0-01	
B-30	Screw	1	017771-6-12	
B-31	Needle Bar Crank Shaft	1	146479-0-01	
B-32	Set Collar	1	140092-0-01	
B-33	Screw	2	100366-0-01	
B-34	Needle Shaft Bushing (Right)	1	148120-0-00	
B-35	Tube Holder	1	146645-0-01	
B-36	Vinyl Tube	1	146644-0-00	
B-37	Wick	1	150307-0-00	
B-38	Screw	1	009680-7-12	
B-39	Screw	3	009670-8-12	
B-40	Bearing Cap	1	143311-0-01	
B-41	Gasket	1	143312-0-00	

Ref. No.	Name of Parts	Q'ty	Parts No.	Assembly No.
B-42	Bearing 6000	1	072600-0-00	
B-43	Cap	1	142274-0-01	
B-44	Crank Shaft	1	※146724-0-01	
B-45	"O" Ring	1	114294-0-01	
B-46	Crank Shaft Inner Bushing (L)	1		146473-0-01
B-47	Crank Shaft Outer Bushing (L)	1		
B-48	Crank Shaft Inner Bushing (M)	1		143179-0-00
B-49	Crank Shaft Outer Bushing (M)	1		
B-50	Screw	1	110668-0-01	
B-51	Worm	1	146647-0-01	
B-52	Screw	2	014770-6-22	
B-53	Oil Rejector	1	140084-0-00	
B-54	Cap Screw	1	140180-0-01	
B-55	Screw	2	013761-4-10	
B-56	Pulley	1	147848-0-02	
B-57	Screw	4	009681-0-12	
B-58	Bearing Case	1	110670-0-00	
B-59	Bearing 6000	2	072600-1-00	
B-60	Thrust Washer	1	110672-0-00	
B-61	Bearing Cover	1	110673-0-00	
B-62	Screw	4	107244-0-01	
B-63	Screw	1	009670-6-12	
B-64	Needle Guard (F)	1	146726-0-01	
B-65	Screw	1	009670-6-12	
B-66	Cloth Plate Lever Stopper	1	146454-0-01	
B-67	Cloth Plate Lever	1	146451-0-01	
B-68	Spring	1	146452-0-01	
B-69	Stud Screw	1	146453-0-01	
B-70	Throat Plate Support Bracket	1	146725-0-01	
B-71	Nut	1	021670-2-02	
B-72	Screw	1	009671-4-12	
B-73	Screw	2	018061-6-22	
B-74	Screw	2	001680-5-12	
B-75	Throat Plate Supporter (B)	1	146495-0-01	
B-76	Throat Plate Supporter (F)	1	146494-0-01	
B-77	Cloth Plate Cushion (B)	1	111486-0-01	
B-78	Screw	2	001680-5-12	
B-79	Screw	2	100032-0-03	
B-80	Throat Plate	1		
B-81	Pin	1	107351-0-01	
B-82	Pulley Cover	1	147415-0-02	

NOTE! PREFIX ALL NUMBERS BY 'BR'.
EXAMPLE BR146222-0-01

C. 831U001-◌ Looper Mechanism

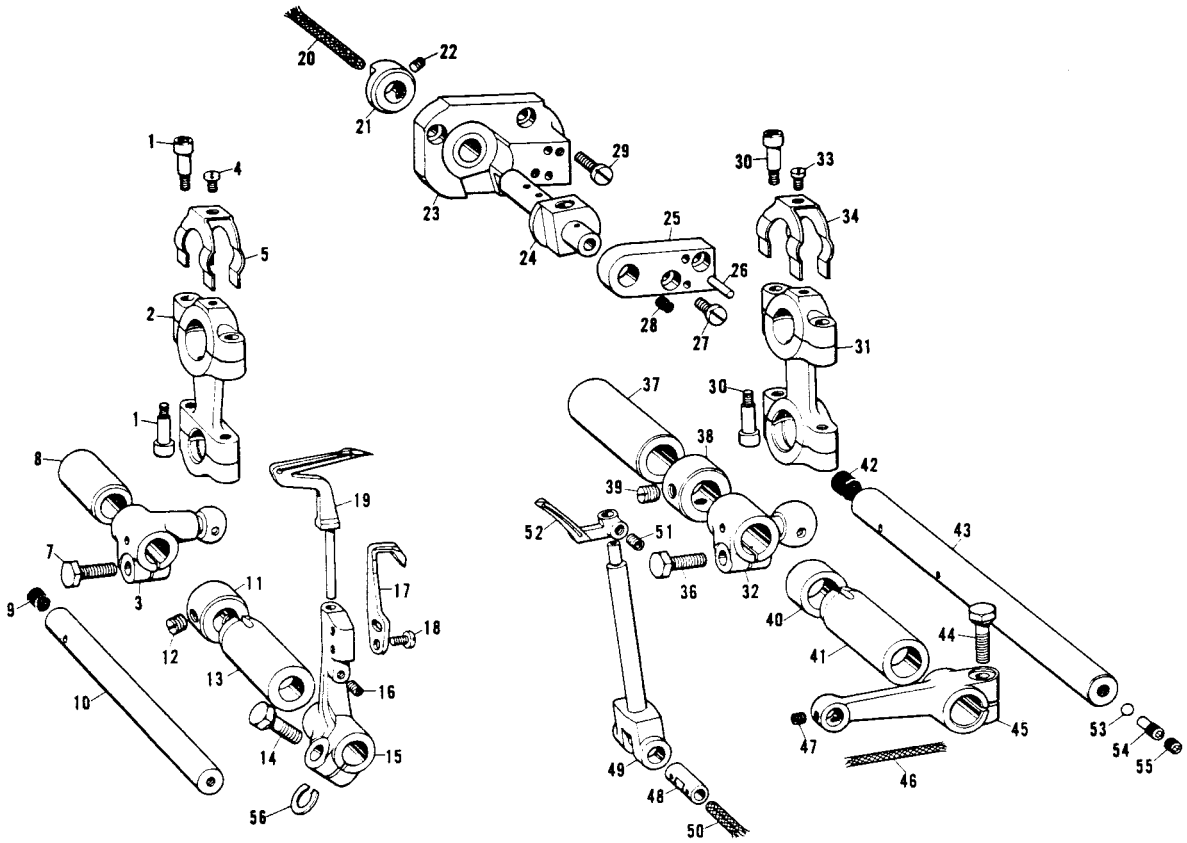

Ref. No.	Name of Parts	Q'ty	Parts No.	Assembly No.
C- 1	Screw	4	148425-0-01	※ 144044-0-01
C- 2	Looper Connecting Rod	1		
C- 3	Looper (Left Hand) Connecting Lever	1		
C- 4	Screw	1	105034-0-03	
C- 5	Looper Connecting Rod Stopper	1	110704-0-01	
C- 7	Screw	1	017771-6-12	
C- 8	Looper (Left Hand) Shaft Bushing (B)	1	146615-0-00	
C- 9	Oil Cap	1	140327-0-01	
C-10	Looper (Left Hand) Shaft	1	146614-0-01	
C-11	Set Collar	1		180323-0-01
C-12	Screw	2	013760-6-12	
C-13	Looper (Left Hand) Shaft Bushing (F)	1	146616-0-00	
C-14	Screw	1	149171-0-01	
C-15	Looper (Left Hand) Holder	1	146617-0-01	
C-56	Spacer	1	148782-0-01	
C-16	Screw	1	014680-4-22	
C-17	Movable Needle Guard	1	144127-0-01	
C-18	Screw	2	009670-8-12	
C-19	Looper (Left Hand)	1	144049-0-01	
C-20	Wick	1	140317-0-00	
C-21	Set Collar	1		146603-1-01
C-22	Screw	2	014680-4-22	
C-23	Looper (Right Hand) Holder Guide Base	1		
C-24	Looper (Right Hand) Holder Guide Block	1		
C-25	Looper (Right Hand) Holder Supporting Plate	1		
C-26	Taper Pin	2		
C-27	Screw	2	009681-0-12	

Ref. No.	Name of Parts	Q'ty	Parts No.	Assembly No.
C-44	Screw	1	149170-0-01	146603-1-01
C-45	Looper (Right Hand) Driving Lever	1		
C-46	Wick	1	140416-0-00	
C-47	Screw	1	148294-0-01	
C-48	Looper (Right Hand) Holding Shaft	1		
C-49	Looper (Right Hand) Holder	1		
C-28	Oil Cap	1	140326-0-01	
C-29	Screw	3	009680-7-12	
C-30	Screw	4	148425-0-01	※ 144025-0-01
C-31	Looper (Right Hand) Connecting Rod	1		
C-32	Looper (Right Hand) Connecting Lever	1		
C-33	Screw	1	105034-0-03	
C-34	Looper Connecting Rod Stopper	1	110704-0-01	
C-36	Screw	1	017771-4-12	
C-37	Bushing	1	144029-0-00	
C-38	Set Collar	1	146581-0-01	
C-39	Screw	2	100260-0-01	
C-40	Thrust Collar	1	146602-0-01	
C-41	Bushing	1	144031-0-00	
C-42	Oil Cap	1	140327-0-01	
C-43	Looper (Right Hand) Shaft	1	148033-0-01	
C-50	Wick	1	140417-0-00	
C-51	Screw	1	014680-4-22	147934-0-01
C-52	Looper (Right Hand)	1		
C-53	Steel Ball	1	071023-8-50	
C-54	Screw	1	148034-0-01	
C-55	Screw	1	148294-0-01	

[NOTE! PREFIX ALL NUMBERS BY 'BR'.
EXAMPLE BR146222-0-01]

D. 831U001-◯ Feed Mechanism

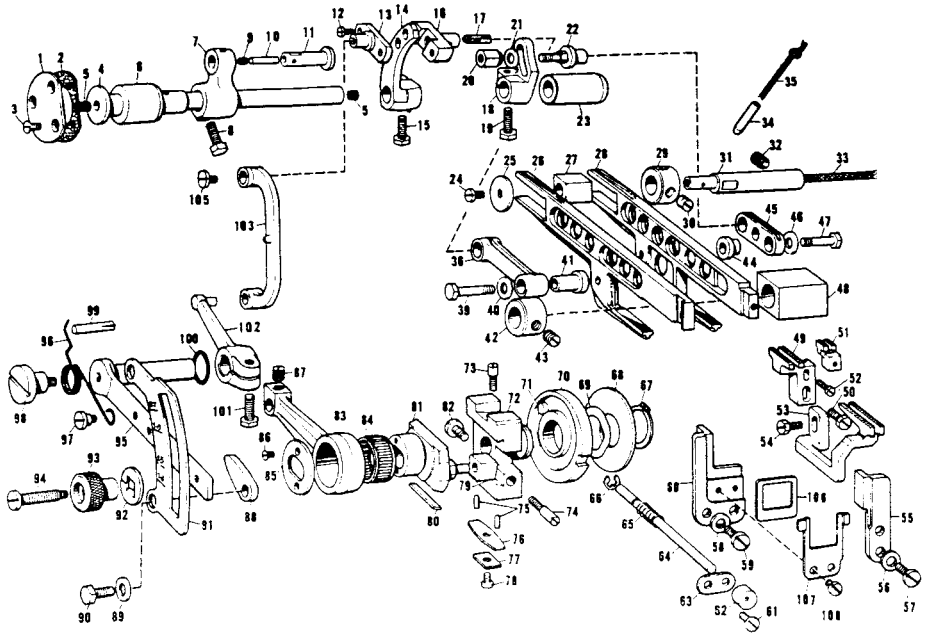

Ref. No.	Name of Parts	Q'ty	Parts No.	Assembly No.
D- 1	Cover for Feed Shaft Bushing (L)	1	140188-0-04	
D- 2	Gasket	1	140187-0-00	
D- 3	Screw	3	102538-0-02	
D- 4	Feed Shaft	1	146538-0-01	
D- 5	Oil Cap	2	140327-0-01	
D- 6	Feed Shaft Bushing (L)	1	146539-0-00	
D- 7	Feed Arm	1	146533-0-01	
D- 8	Screw	1	017771-6-12	
D- 9	Oil Cap	1	140326-0-01	
D-10	Pin	1	147318-0-00	
D-11	Feed Arm Pin	1	146532-0-01	
D-12	Screw	2	009660-7-12	
D-13	Differential Feed Adjuster Cap	1		
D-14	Differential Feed Arm	1		146550-0-01
D-15	Screw	1	017771-4-12	
D-16	Differential Feed Adjuster	1		
D-17	Felt	1	147363-0-00	
D-18	Main Feed Arm	1	140205-0-01	
D-19	Screw	1	017771-4-12	
D-20	Nut	1	143565-0-01	
D-21	Washer	1	113431-0-02	
D-22	Main Feed Link Shaft	1	143564-0-01	
D-23	Feed Shaft Bushing (R)	1	146540-0-00	
D-24	Screw	1	009680-7-12	
D-25	Slide Plate	1	146549-0-01	
D-26	Differential Feed (Front) Bar	1	146543-0-01	147773-0-01
D-28	Main Feed (Back) Bar	1	146542-0-01	
D-48	Feed Lifting Slide Block	1	146544-0-00	146541-0-01
D-27	Feed Bar Guide Block	1	146547-0-00	
D-29	Set Collar	1		
D-30	Screw	2	101706-0-01	181969-0-03
D-31	Feed Bar Guide Block Shaft	1	146548-0-01	
D-32	Screw	1	014770-6-22	
D-33	Wick	1	147362-0-00	
D-34	Oil Pipe	1	147217-0-00	
D-35	Wick	1	112735-0-00	
D-36	Differential Feed Link	1	146554-0-01	
D-39	Feed Link Shaft (Large)	1	140217-0-01	
D-40	Washer	1	140208-0-01	
D-41	Differential Feed Link Bushing	1	146555-0-01	
D-42	Set Collar	1	146741-0-00	
D-43	Screw	1	101706-0-01	
D-44	Main Feed Link Bushing	1	140207-0-01	
D-45	Main Feed Link	1	140209-0-01	
D-46	Washer	1	140208-0-01	
D-47	Main Feed Link Shaft (Small)	1	140210-0-01	
D-49	Main Feed (Back) Dog	1	146744-0-01	
D-50	Screw	1	117516-0-01	
D-51	Chain Feed Dog	1	146577-0-01	
D-52	Screw	1	009630-8-12	
D-53	Differential Feed (Front) Dog	1	146748-0-01	
D-54	Screw	1	117516-0-01	
D-55	Feed Bar Guide (R)	1	148174-0-00	

NOTE! PREFIX ALL NUMBERS BY 'BR'.
EXAMPLE BR146222-0-01

Ref. No.	Name of Parts	Q'ty	Parts No.	Assembly No.
D-56	Washer	2	113431-0-02	
D-57	Screw	2	107407-0-03	
D-58	Washer	2	113431-0-02	
D-59	Screw	2	107407-0-03	
D-60	Feed Bar Guide (L)	1	149888-0-00	
D-61	Screw	1	009670-6-12	
D-62	Cap	1	146537-0-00	
D-63	Supporter for Feed Adjusting Shaft	1	146536-0-01	
D-64	Feed Adjusting Shaft	1	146534-0-01	
D-65	Spring	1	146535-0-01	
D-66	Stop Ring	1	048040-3-42	
D-67	Stop Ring	1	048150-1-43	
D-68	Washer	1	146529-0-01	
D-69	Spring	1	144055-0-01	
D-70	Eccentric Wheel Adjusting Cam	1		
D-71	Eccentric Wheel Adjusting Cam Stopper	1		144053-0-01
D-72	Eccentric Wheel Holder	1	146405-0-01	
D-73	Screw	2	100025-0-02	
D-74	Screw	1	145663-0-01	
D-75	Gib Holder Pin	2	146402-0-01	
D-76	Gib Holder Plate (L)	1	146404-0-01	
D-77	Gib Holder Plate (S)	1	146403-0-01	
D-78	Screw	1	009660-5-02	
D-79	Slide Block	1	140165-0-01	146528-0-01
D-80	Gib	1	146401-0-01	
D-81	Eccentric Wheel	1		
D-82	Screw	1	107093-0-02	
D-83	Feed Rod	1	146530-0-01	
D-84	Needle Roller Bearing 20	1	146531-0-01	
D-85	Feed Rod Presser Plate	1	140176-0-01	
D-86	Screw	2	117517-0-03	
D-87	Screw	1	013770-7-10	
D-88	Stopper for Differential Stitch Control	2	146563-0-01	
D-89	Washer	2	025770-2-32	
D-90	Screw	2	017771-4-12	
D-91	Differential Feed Indicator	1	146561-0-01	
D-92	Washer	1	146566-0-01	
D-93	Knob	1	146564-0-01	
D-94	Screw	1	146565-0-01	
D-95	Differential Feed Adjusting Lever	1	146558-0-01	
D-96	Spring	1	146560-0-01	
D-97	Stud Screw	1	100294-0-02	
D-98	Stud Screw	1	146559-0-01	
D-99	Dowel Pin	1	140063-0-01	
D-100	Gasket	1	109203-0-01	
D-101	Screw	1	017771-4-12	
D-102	Differential Feed Link Lever	1		146914-0-01
D-103	Differential Feed Adjusting Link	1	146556-0-01	
D-105	Screw	1	148834-0-01	
D-106	Fragment Protecter	1	149886-0-00	
D-107	Fragment Protecter Supporter	1	149887-0-01	
D-108	Screw	2	106568-0-03	

E. 831U001-◌ Knives and Presser Foot Mechanism

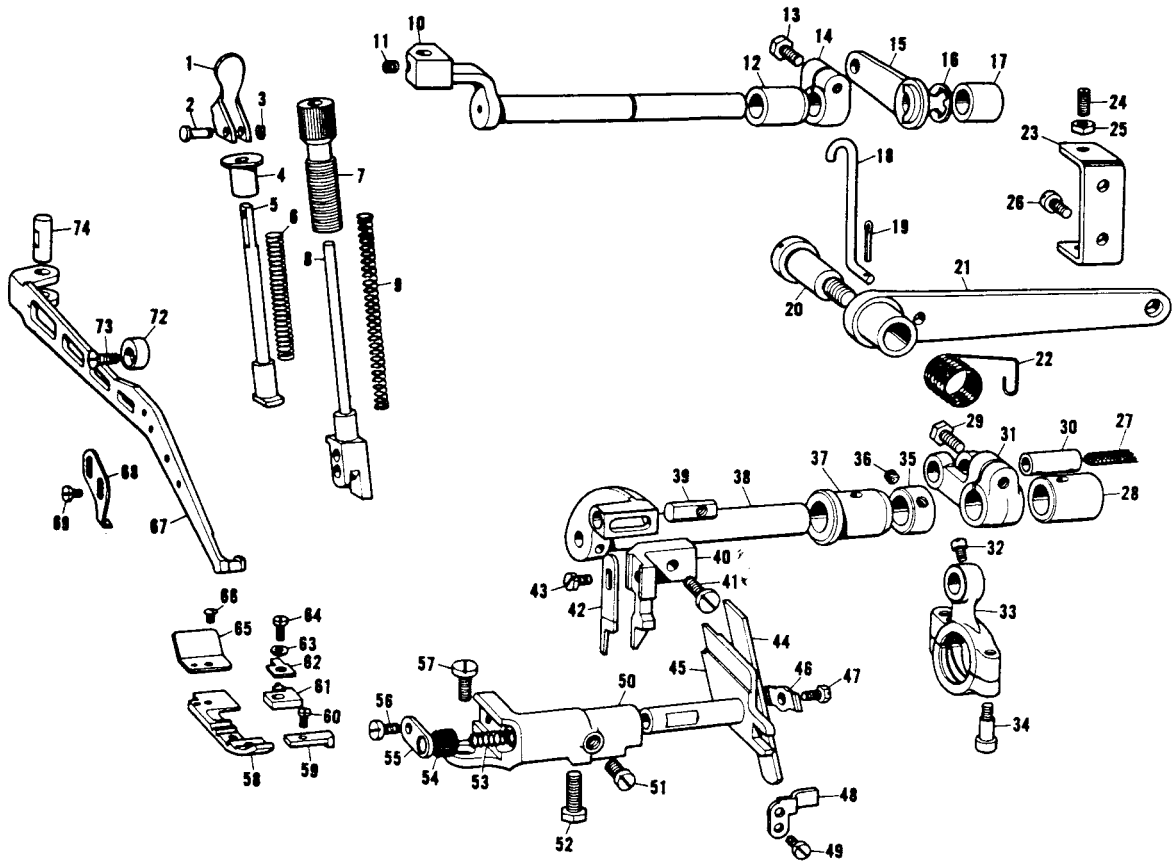

Ref. No.	Name of Parts	Q'ty	Parts No.	Assembly No.
E- 1	Presser Bar Lifter	1	147759-0-01	
E- 2	Presser Bar Lifter Pin	1	144084-0-01	
E- 3	Stop Ring	1	048020-3-42	
E- 4	Washer	1	144083-0-01	
E- 5	Presser Bar Lifter Shaft	1	144085-0-01	
E- 6	Spring	1	144086-0-01	
E- 7	Screw	1	144079-0-01	
E- 8	Presser Bar	1	146521-0-01	
E- 9	Spring	1	144081-0-01	
E-10	Presser Arm Shaft	1	146525-0-01	
E-11	Screw	1	014680-4-22	
E-12	Bushing	1	140263-0-00	
E-13	Screw	1	017771-6-12	
E-14	Collar	1	140261-0-01	
E-15	Presser Foot Lifter Inside Lever	1	146524-0-01	
E-16	Stop Ring	1	048080-3-42	
E-17	Bushing (Right)	1	140262-0-00	
E-18	Presser Foot Lifter Link	1	146523-0-01	
E-19	Cutter Pin	1	110793-0-01	
E-20	Screw	1	148372-0-01	
E-21	Presser Foot Lifter Lever	1	143323-1-03	
E-22	Spring	1	143325-0-01	
E-23	Adjuster Plate	1	146522-0-01	
E-24	Screw	2	011711-4-12	
E-25	Nut	2	110161-0-06	
E-26	Screw	2	009680-7-12	
E-27	Wick	1	140317-0-00	
E-28	Bushing Right	1	144117-0-00	
E-29	Screw	1	017771-6-12	
E-30	Pin	1	140232-0-01	
E-31	Upper Knife Driving Lever	1	140233-0-01	
E-32	Screw	1	100366-0-01	* 148427-0-01
E-33	Upper Knife Driving Rod	1	148428-0-00	
E-34	Screw	2	148425-0-01	
E-35	Set Collar	1	146581-0-01	
E-36	Screw	2	100260-0-01	
E-37	Bushing	1	140235-0-00	

Ref. No.	Name of Parts	Q'ty	Parts No.	Assembly No.
E-38	Upper Knife Driving Arm	1	146580-0-01	
E-39	Nut	1	148281-0-01	
E-40	Upper Knife Holder	1	144073-0-01	
E-41	Screw	1	107407-0-03	
E-42	Upper Knife (Movable)	1	144074-0-00	
E-43	Screw	1	144075-0-01	
E-44	Lower Knife (Stationary)	1	112436-0-01	
E-45	Lower Knife Holder	1	146754-0-01	
E-46	Lower Knife Holding Plate	1	117515-0-01	
E-47	Screw	1	117516-0-01	
E-48	Lower Knife Holder Guide	1	146585-0-01	
E-49	Screw	2	009670-6-12	
E-50	Lower Knife Holder Supporter	1	146582-0-01	
E-51	Screw	1	102627-0-01	
E-52	Screw	1	017771-4-12	
E-53	Spring	1	146584-0-01	
E-54	Cap	1	146586-0-00	
E-55	Lower Knife Holder Spring Stopper	1	140248-0-01	
E-56	Screw	1	009680-7-12	
E-57	Screw	1	107407-0-03	
E-58	Presser Foot	1		
E-59	Presser Foot (Front)	1	146888-0-01	
E-60	Screw	1	009639-3-12	
E-61	Chaining-off Finger	1	146886-0-01	
E-62	Presser Foot Hinge Spring	1	146887-0-01	146884-0-01
E-63	Washer	1	025030-1-32	
E-64	Screw	1	100080-0-04	
E-65	Presser Foot (Rear)	1	146889-0-01	
E-66	Screw	1	100105-0-05	
E-67	Main Presser Arm	1	146789-0-01	
E-68	Presser Foot Stopper	1	140504-0-01	
E-69	Screw	2	001660-5-12	
E-72	Presser Arm Stopper	1	144088-0-01	
E-73	Screw	1	107231-0-02	
E-74	Pin for Presser Arm Shaft	1	146527-0-01	

NOTE! PREFIX ALL NUMBERS BY 'BR'.
EXAMPLE BR146222-0-01

F. 831U001-◯ Threading

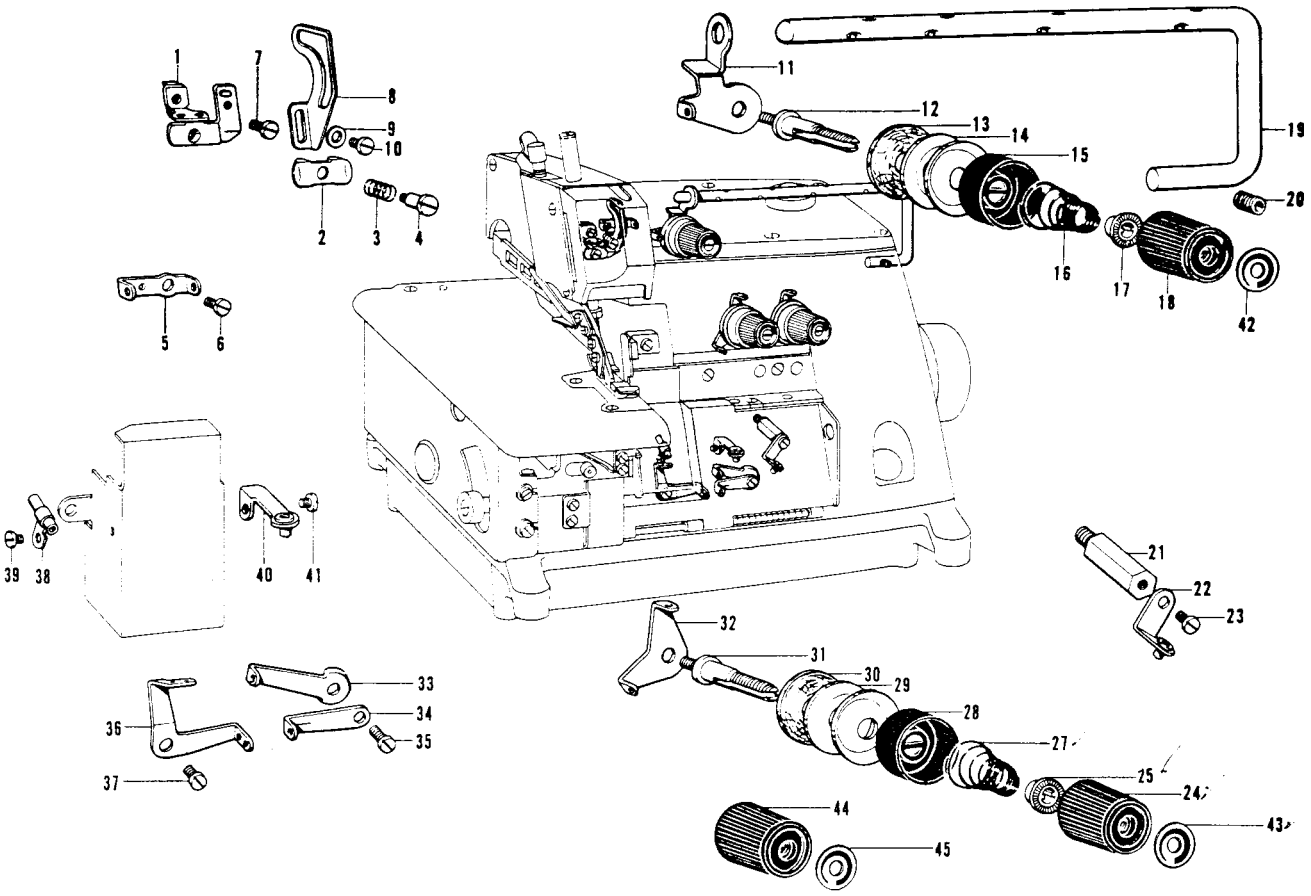

Ref. No.	Name of Parts	Q'ty	Parts No.	Assembly No.
F-1	Needle Thread Guide	1	147344-0-01	
F-2	Needle Thread Guard	1	112300-0-01	
F-3	Needle Thread Guard Spring	1	112299-0-01	
F-4	Screw	1	112301-0-01	
F-5	Needle Thread Guide (A)	1	143757-0-01	
F-6	Screw	1	009660-4-12	
F-7	Screw	1	009670-6-12	
F-8	Needle Thread Take-up	1	144108-0-01	
F-9	Washer	1	105248-0-01	
F-10	Screw	1	009669-3-12	
F-11	Thread Guide Supporter	1	146649-0-01	
F-12	Looper Thread Tension Control Stud	1	110820-0-01	
F-13	Felt	1	110832-0-01	
F-14	Tension Disc	2	145446-0-01	
F-15	Tension Disc Washer	1	144103-0-02	
F-16	Spring	1	144104-0-01	
F-17	Washer	1	144105-0-00	
F-19	Main Thread Guide	1	146648-0-01	
F-20	Screw	1	014770-6-22	
F-18	Thread Tension Adjusting Nut	1		151201-0-03
F-42	Color Plate	1	147049-0-03	
F-24	Thread Tension Adjusting Nut	1		151201-0-02
F-43	Color Plate	1	147049-0-02	

Ref. No.	Name of Parts	Q'ty	Parts No.	Assembly No.
F-21	Thread Guide Holder	1	144111-0-01	
F-22	Looper (Left Hand) Thread Guide	1	146926-0-01	
F-23	Screw	1	009670-6-12	
F-25	Washer	2	144105-0-00	
F-27	Spring	2	144110-0-01	
F-28	Tension Disc Washer	2	144103-0-02	
F-29	Tension Disc	4	145446-0-01	
F-30	Felt	2	110832-0-01	
F-31	Looper Thread Tension Control Stud	2	110820-0-01	
F-32	Needle Thread Guide Plate	2	110813-0-01	
F-33	Looper (Right Hand) Thread Take-up (R)	1	146652-0-01	
F-34	Looper (Left Hand) Thread Take-up (R)	1	146653-0-01	
F-35	Screw	1	009670-8-12	
F-36	Looper Thread Take-up (L)	1	146654-0-01	
F-37	Screw	1	009670-6-12	
F-38	Looper (Right Hand) Thread Guide	1	142669-0-01	
F-39	Screw	1	122771-0-02	
F-40	Looper (Right Hand) Thread Guide	1	146929-0-01	
F-41	Screw	1	009670-6-12	
F-44	Thread Tension Adjusting Nut	1		151201-0-04
F-45	Color Plate	1	147049-0-04	

NOTE! PREFIX ALL NUMBERS BY 'BR'.
EXAMPLE BR146222-0-01

G. 831U001-◌ Lubrication

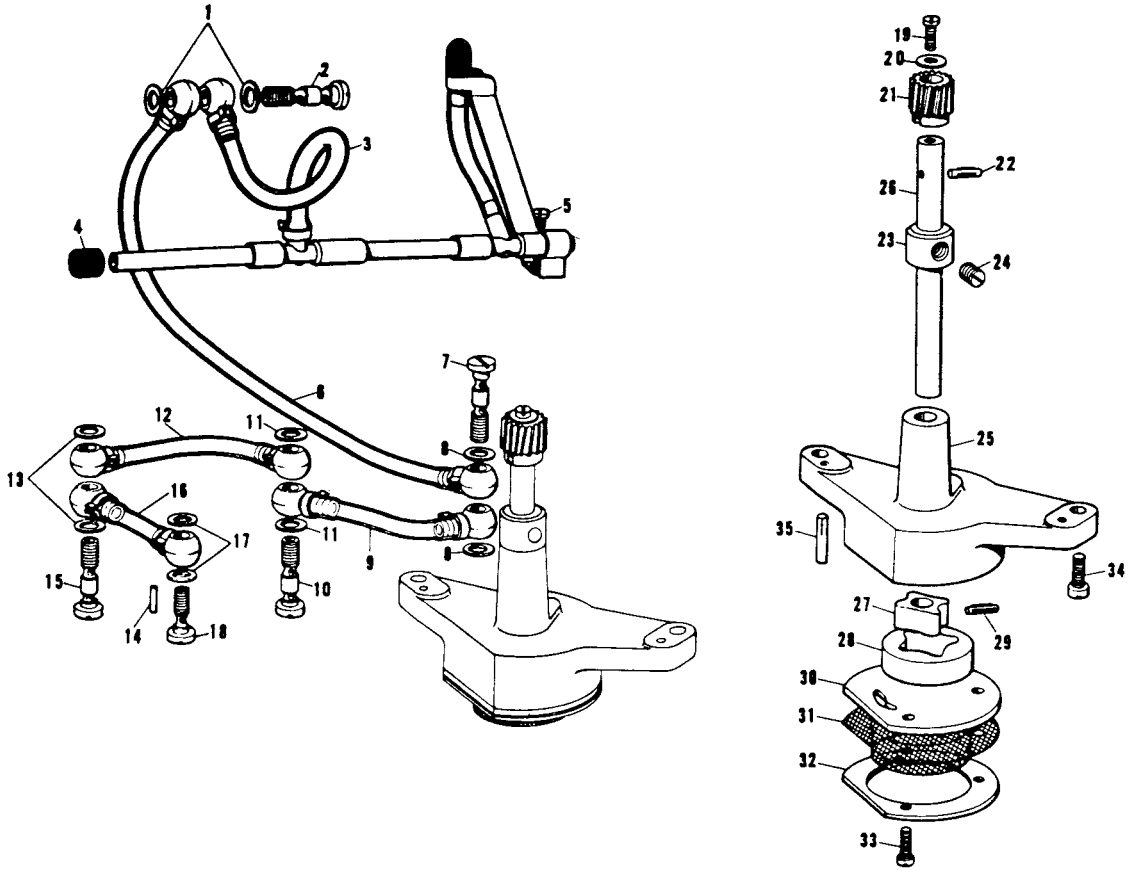

Ref. No.	Name of Parts	Q'ty	Parts No.	Assembly No.	Ref. No.	Name of Parts	Q'ty	Parts No.	Assembly No.
G- 1	Gasket	2	112348-0-01		G-19	Screw	1	009670-8-12	
G- 2	Oil Feeding Pipe (B)	1	112364-0-01		G-20	Washer	1	025350-3-32	147521-0-01
G- 3	Main Oil Pipe	1	146636-0-01		G-21	Worm Wheel	1		
G- 4	Oil Cap	1	140325-0-01		G-22	Pin	1	144622-0-01	
G- 5	Screw	1	009670-6-12		G-23	Set Collar	1		181995-0-01
G- 6	Vinyl Tube	1	140780-0-01		G-24	Screw	2	101706-0-01	
G- 7	Oil Feeding Pipe (B)	1	112364-0-01		G-25	Pump Case	1	147522-0-00	
G- 8	Gasket	2	112348-0-01		G-26	Main Pump Gear Shaft	1		
G- 9	Vinyl Tube	1	140779-0-01		G-27	Pump Inner Roter	1		
G-10	Oil Feeding Pipe (B)	1	112364-0-01		G-28	Pump Outer Roter	1		147523-0-01
G-11	Gasket	2	112348-0-01		G-29	Pin	1		
G-12	Vinyl Tube	1	140778-0-01		G-30	Pump Cover	1	147527-0-01	
G-13	Gasket	2	112348-0-01		G-31	Oil Pump Screen	1	147528-0-00	
G-14	Pin	1	147318-0-00		G-32	Oil Pump Screen Frame	1	147529-0-00	
G-15	Oil Feeding Pipe (B)	1	112364-0-01		G-33	Screw	3	009671-0-12	
G-16	Vinyl Tube	1	147211-0-01		G-34	Screw	2	009711-2-12	
G-17	Gasket	2	112348-0-01		G-35	Pin	2	508693-0-01	
G-18	Screw	1	112359-0-01						

NOTE! PREFIX ALL NUMBERS BY 'BR'.
EXAMPLE BR146222-0-01

H. 831U001-◌ Needle Cooler

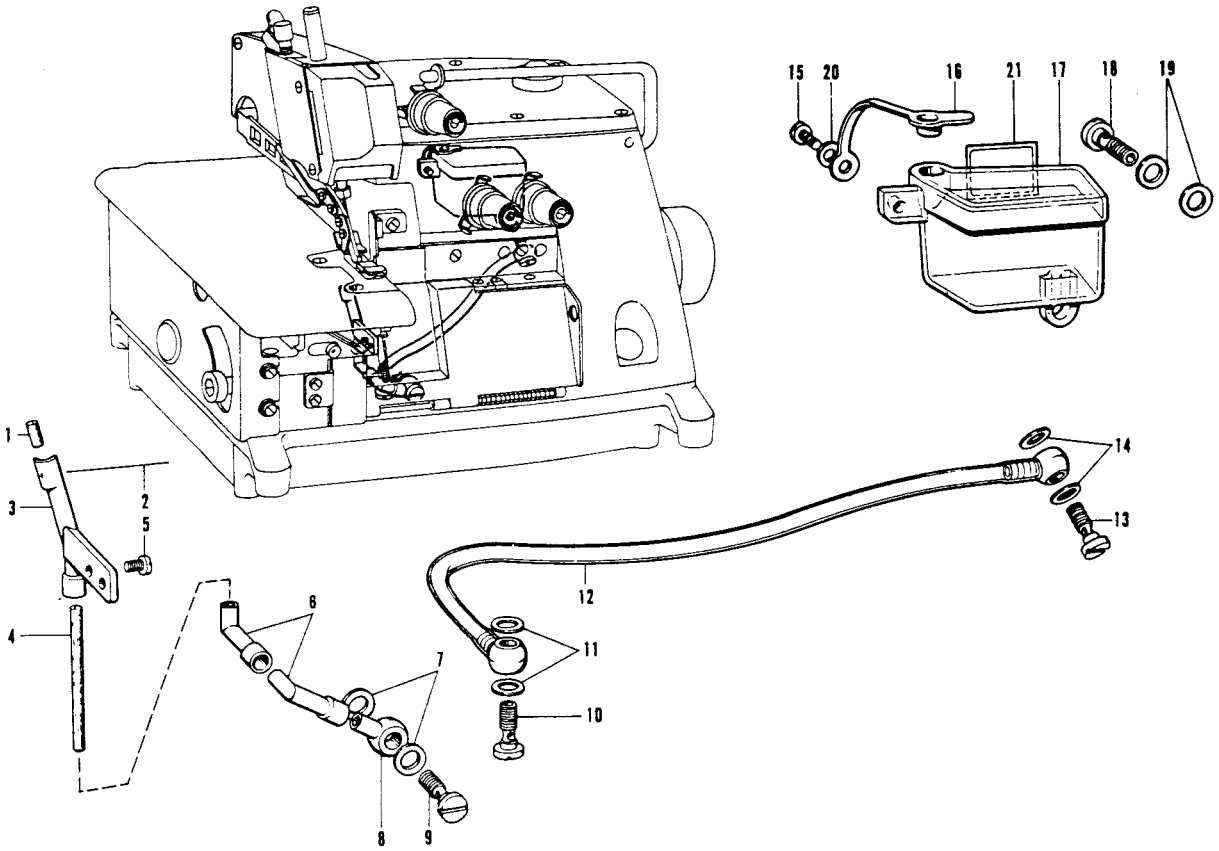

Ref. No.	Name of Parts	Q'ty	Parts No.	Assembly No.	Ref. No.	Name of Parts	Q'ty	Parts No.	Assembly No.
H- 1	Felt (S)	1	146740-0-00	146738-0-00	H-12	Vinyl Tube	1	146512-0-00	
H- 2	Steel Wire	1	147738-0-00		H-13	Screw	1	112359-0-01	
H- 3	Felt Holder	1	146739-0-00		H-14	Gasket	2	112348-0-01	
H- 4	Felt	1	144116-0-00		H-15	Screw	1	009681-0-12	
H- 5	Screw	2	100257-0-10		H-16	Cap	1		146511-0-00
H- 6	Pipe Joint	2	146516-0-00		H-17	Oil Tank	1		
H- 7	Gasket	2	112348-0-01		H-18	Screw	1	112359-0-01	
H- 8	Oil Feeding Connector	1	146515-0-00		H-19	Gasket	2	112348-0-01	
H- 9	Screw	1	112359-0-01		H-20	Washer	1	113431-0-02	
H-10	Screw	1	112359-0-01		H-21	Label	1		
H-11	Gasket	2	112348-0-01						

NOTE! PREFIX ALL NUMBERS BY 'BR'.
EXAMPLE BR146222-0-01

I. 831U002-◯ (Bulky Knit Work)

This machine is the same as the 831U001-◯ machine, with the following exceptions:

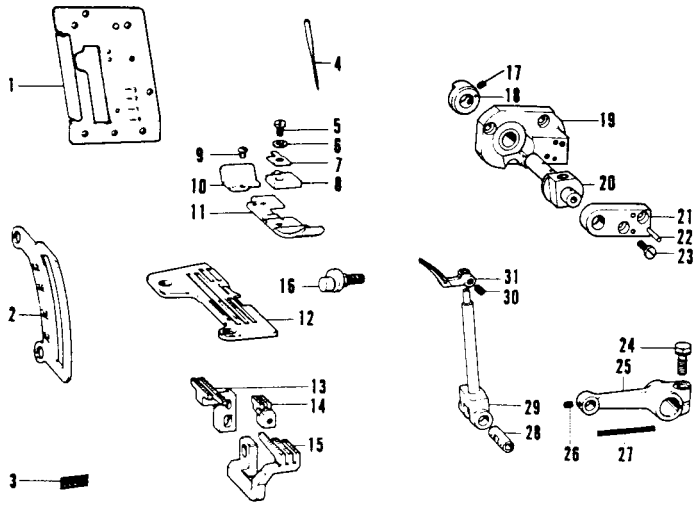

Ref. No.	Name of Parts	Q'ty	Parts No.	Assembly No.
I- 1	Face Plate	1	146706-0-01	
I- 2	Differential Feed Indicator	1	146742-0-01	
I- 3	Label	1		
I- 4	Needle Cat. No. 6120 #14	1	151200-0-14	
I- 5	Screw	1	100080-0-04	
I- 6	Washer	1	025030-1-32	
I- 7	Presser Foot Hinge Spring	1	146887-0-01	
I- 8	Chaining-off Finger	1	146900-0-01	146898-0-01
I- 9	Screw	1	100105-0-05	
I-10	Presser Foot (Rear)	1	145774-0-01	
I-11	Presser Foot	1		
I-12	Throat Plate	1		
I-13	Main Feed (Back) Dog	1	146745-0-01	
I-14	Chain Feed Dog	1	146578-0-01	
I-15	Differential Feed (Front) Dog	1	146750-0-01	
I-16	Main Feed Shaft	1	144068-0-01	
I-17	Screw	2	014680-4-22	
I-18	Set Collar	1		
I-19	Looper (Right Hand) Holder Guide Base	1		
I-20	Looper (Right Hand) Holder Guide Block	1		
I-21	Looper (Right Hand) Holder Supporting Plate	1		
I-22	Taper Pin	2		146611-1-01
I-23	Screw	2	009681-0-12	
I-24	Screw	1	149170-0-01	
I-25	Looper (Right Hand) Driving Lever	1		
I-26	Screw	1	148294-0-01	
I-27	Wick	1	140416-0-00	
I-28	Looper (Right Hand) Holding Shaft	1		
I-29	Looper (Right Hand) Holder	1		
I-30	Screw	1	014680-4-22	147937-0-01
I-31	Looper (Right Hand)	1		

NOTE! PREFIX ALL NUMBERS BY 'BR'.
EXAMPLE BR146222-0-01

J. 831U003-◯ (Blind Stitch Hemming)

This machine is the same as the 831U001-◯ machine, with the following exceptions:

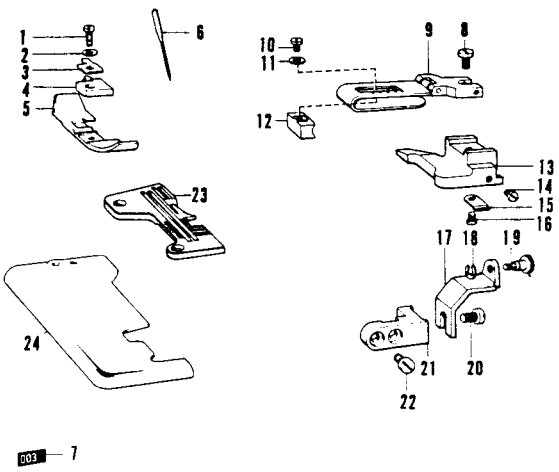

Ref. No.	Name of Parts	Q'ty	Parts No.	Assembly No.
J- 1	Screw	1	100080-0-04	
J- 2	Washer	1	025030-1-32	
J- 3	Presser Foot Hinge Spring	1	146887-0-01	146890-0-01
J- 4	Chaining-off Finger	1	146892-0-01	
J- 5	Presser Foot	1		
J- 6	Needle Cat. No. 6120 #9	1	151200-0-09	
J- 7	Label	1		
J- 8	Screw	1	001670-6-14	
J- 9	Blind Stitch Hemming Guide A Assembly	1		
J-10	Screw	1	009660-4-12	151173-0-01
J-11	Washer	1	025030-2-32	
J-12	Blind Stitch Hemming Guide Adjuster	1	150339-0-01	
J-13	Blind Stitch Hemming Guide	1		
J-14	Screw	1	111443-0-01	
J-15	Flat Spring	1	147713-0-01	
J-16	Screw	1	009679-3-12	147710-0-01
J-17	Blind Stitch Hemming Guide Fitting Holder	1	147712-0-01	
J-18	Stop Ring	1	048030-3-42	
J-19	Adjusting Screw	1	146759-0-01	
J-20	Screw	1	009680-7-12	
J-21	Supporter for Blind Stitch Hemming Guide Fitting	1	146760-0-01	
J-22	Screw	2	009670-6-12	
J-23	Throat Plate	1		
J-24	Cloth Plate	1	146716-0-01	

NOTE! PREFIX ALL NUMBERS BY 'BR'.
EXAMPLE BR146222-0-01

I'. 831U004-◯ (Blind Stitch Hemming)

This machine is the same as the 831U001-◯ machine, with the following exceptions:

J'. 831U006-◯ (Serging)

This machine is the same as the 831U001-◯ machine, with the following exceptions:

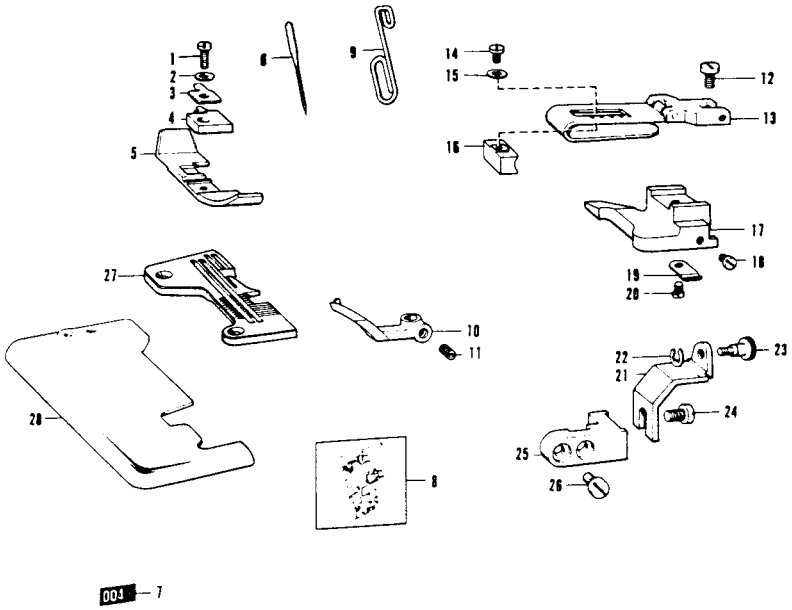

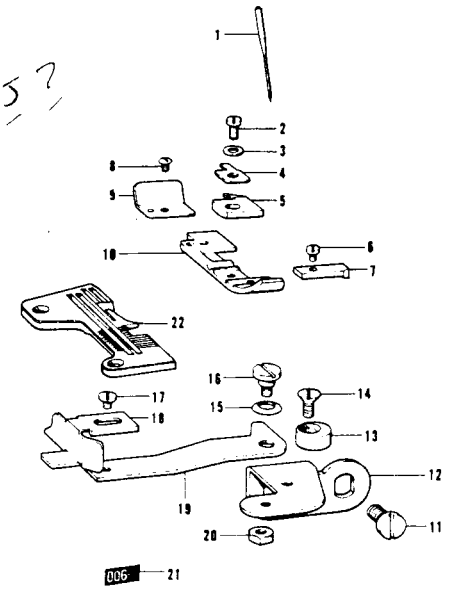

Ref. No.	Name of Parts	Q'ty	Parts No.	Assembly No.
I'- 1	Screw	1	100080-0-04	146890-0-01
I'- 2	Washer	1	025030-1-32	
I'- 3	Presser Foot Hinge Spring	1	146887-0-01	
I'- 4	Chaining-off Finger	1	146892-0-01	
I'- 5	Presser Foot	1		
I'- 6	Needle Cat. No. 6120 # 9	1	151200-0-09	
I'- 7	Label	1		
I'- 8	Threading Diagram	1	146719-0-01	
I'- 9	Needle Thread Take-up	1	142201-0-01	
I'-10	Spreader	1		147935-0-01
I'-11	Screw	1	014680-4-22	
I'-12	Screw	1	001670-6-14	
I'-13	Blind Stitch Hemming Guide A Assembly	1		151178-0-01
I'-14	Screw	1	009660-4-12	
I'-15	Washer	1	025030-2-32	
I'-16	Blind Stitch Hemming Guide Adjuster	1	150339-0-01	
I'-17	Blind Stitch Hemming Guide	1		147710-0-01
I'-18	Screw	1	009679-3-12	
I'-19	Flat Spring	1	147713-0-01	
I'-20	Screw	1	111443-0-01	
I'-21	Blind Stitch Hemming Guide Fitting Holder	1	147712-0-01	
I'-22	Stop Ring	1	048030-3-42	
I'-23	Adjusting Screw	1	146759-0-01	
I'-24	Screw	1	009680-7-12	
I'-25	Supporter for Blind Stitch Hemming Guide Fitting	1	146760-0-01	
I'-26	Screw	2	009670-6-12	
I'-27	Throat Plate	1		
I'-28	Cloth Plate	1	146716-0-01	

NOTE! PREFIX ALL NUMBERS BY 'BR'.
EXAMPLE BR146222-0-01

Ref. No.	Name of Parts	Q'ty	Parts No.	Assembly No.
J'- 1	Needle Cat. No. 6120 # 14	1	151200-0-14	
J'- 2	Screw	1	100080-0-04	146893-0-01
J'- 3	Washer	1	025030-1-32	
J'- 4	Presser Foot Hinge Spring	1	146887-0-01	
J'- 5	Chaining-off Finger	1	146894-0-01	
J'- 6	Screw	1	009639-3-12	
J'- 7	Presser Foot (Front)	1	146888-0-01	
J'- 8	Screw	1	100105-0-05	
J'- 9	Presser Foot (Rear)	1		
J'-10	Presser Foot	1		
J'-11	Screw	2	110201-0-01	
J'-12	Guide Supporter	1	146599-0-01	146761-0-01
J'-13	Presser Arm Stopper	1	144088-0-01	
J'-14	Screw	1	005710-8-12	
J'-15	Spring Washer	1	146598-0-01	
J'-16	Stud Screw	1	146597-0-01	
J'-17	Screw	1	009679-3-12	
J'-18	Guide	1	146762-0-01	
J'-19	Guide Set Plate	1	146596-0-01	
J'-20	Nut	1	021680-2-02	
J'-21	Label	1		
J'-22	Throat Plate	1		

NOTE! PREFIX ALL NUMBERS BY 'BR'.
EXAMPLE BR146222-0-01

M. 831U005-◯ (Serging)

This machine is the same as the 831U001-◯ machine, with the following exceptions :

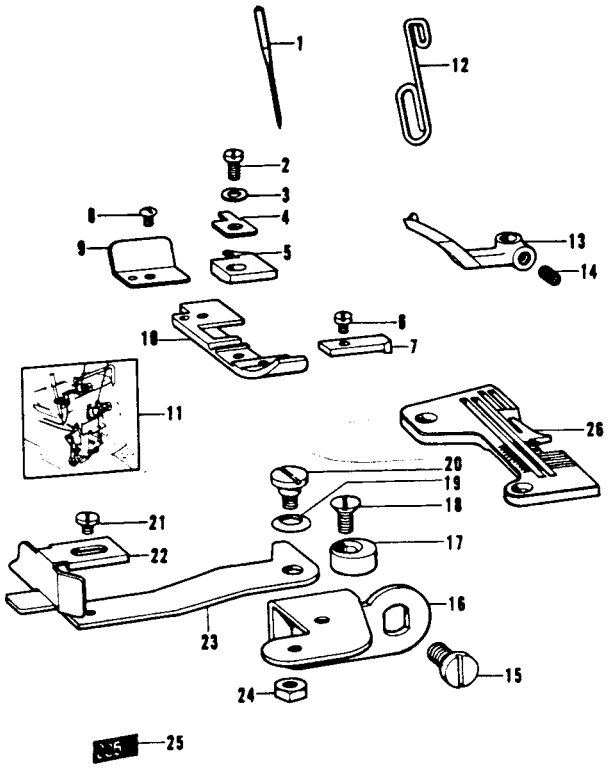

Ref. No.	Name of Parts	Q'ty	Parts No.	Assembly No.
M- 1	Needle Cat. No. 6120 #14	1	151200-0-14	
M- 2	Screw	1	100080-0-04	
M- 3	Washer	1	025030-1-32	
M- 4	Presser Foot Hinge Spring	1	146887-0-01	
M- 5	Chaining-off Finger	1	146894-0-01	
M- 6	Screw	1	009639-3-12	146893-0-01
M- 7	Presser Foot (Front)	1	146888-0-01	
M- 8	Screw	1	100105-0-05	
M- 9	Presser Foot (Rear)	1	146889-0-01	
M-10	Presser Foot	1		
M-11	Threading Diagram	1	146719-0-01	
M-12	Needle Thread Take-up	1	142201-0-01	
M-13	Spreader	1		147935-0-01
M-14	Screw	1	014680-4-22	
M-15	Screw	2	110201-0-01	
M-16	Guide Supporter	1	146599-0-01	
M-17	Presser Arm Stopper	1	144088-0-01	
M-18	Screw	1	005710-8-12	
M-19	Spring Washer	1	146598-0-01	
M-20	Stud Screw	1	146597-0-01	146761-0-01
M-21	Screw	1	009679-3-12	
M-22	Guide	1	146762-0-01	
M-23	Guide Set Plate	1	146596-0-01	
M-24	Nut	1	021680-2-02	
M-25	Label	1		
M-26	Throat Plate	1		

NOTE! PREFIX ALL NUMBERS BY 'BR'.
EXAMPLE BR146222-0-01

M'. 831U010-◯ (Taping on Light, Medium Work)

This machine is the same as the 831U001-◯ machine, with the following exceptions :

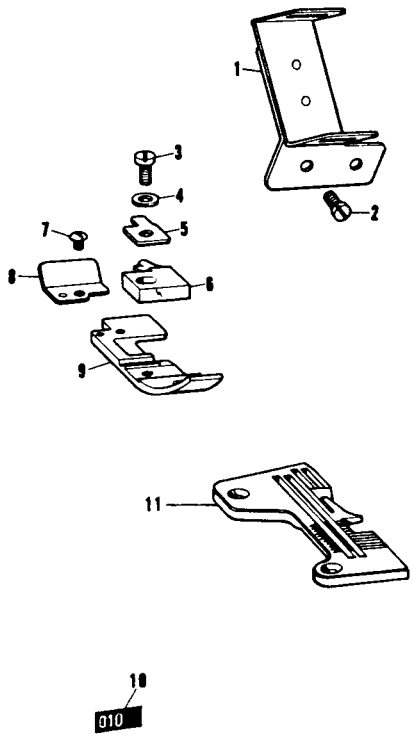

Ref. No.	Name of Parts	Q'ty	Parts No.	Assembly No.
M'- 1	Tape Guide	1	146883-0-01	
M'- 2	Screw	2	009669-4-12	
M'- 3	Screw	1	100080-0-04	
M'- 4	Washer	1	025030-1-32	
M'- 5	Presser Foot Hinge Spring	1	146887-0-01	
M'- 6	Chaining-off Finger	1	146897-0-01	146895-0-01
M'- 7	Screw	1	100105-0-05	
M'- 8	Presser Foot (Rear)	1	145774-0-01	
M'- 9	Presser Foot	1		
M'-10	Label	1		
M'-11	Throat Plate	1		

NOTE! PREFIX ALL NUMBERS BY 'BR'.
EXAMPLE BR146222-0-01

K. 831U008-◯ (Ruffling)

This machine is the same as the 831U001-◯ machine, with the following exceptions:

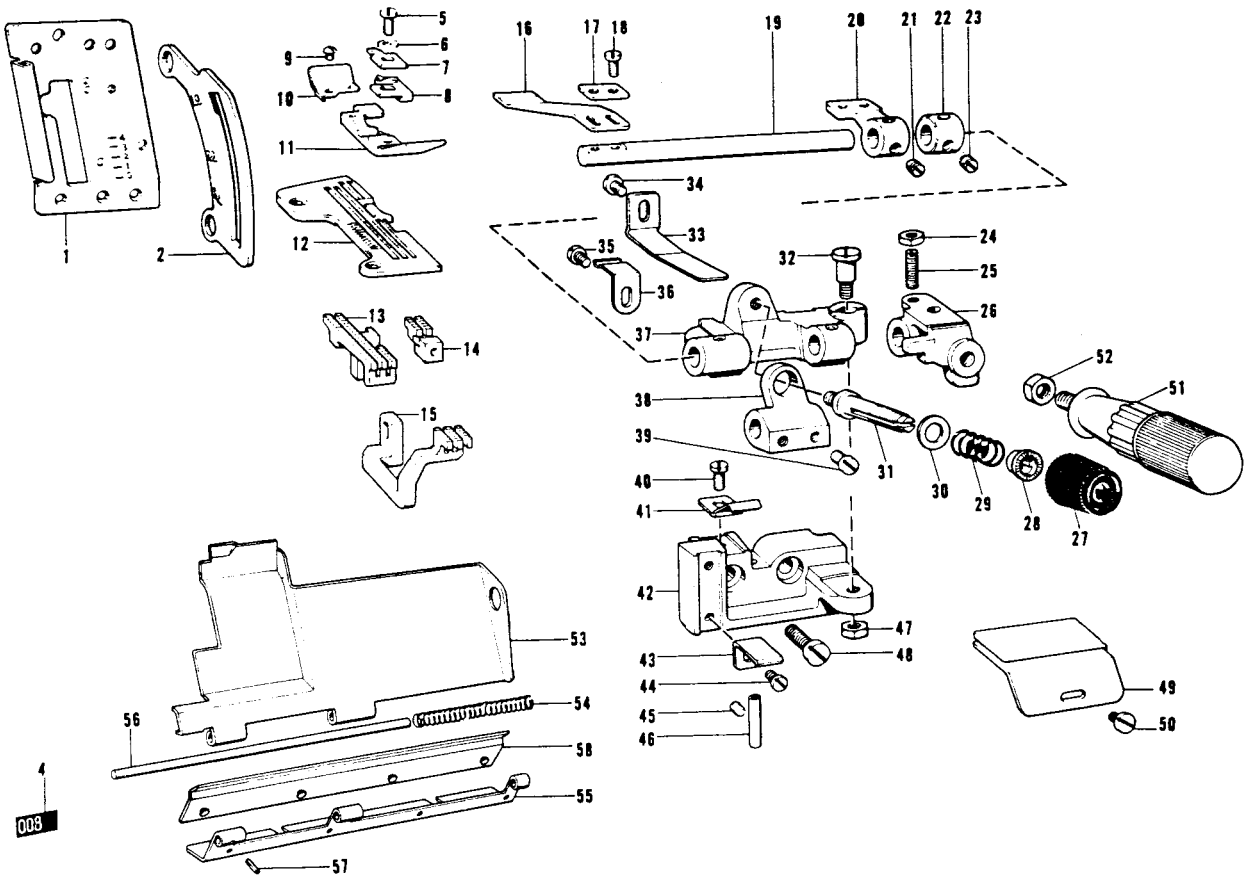

Ref. No.	Name of Parts	Q'ty	Parts No.	Assembly No.
K- 1	Face Plate	1	146430-0-01	
K- 2	Differential Feed Indicator	1	146562-0-01	
K- 4		1		
K- 5	Screw	1	100080-0-04	
K- 6	Washer	1	025030-1-32	
K- 7	Presser Foot Plate	1	144091-0-01	
K- 8	Chaining-off Finger	1	144813-0-01	144811-0-01
K- 9	Screw	1	100105-0-05	
K-10	Presser Foot Chain Shield	1	144100-0-01	
K-11	Presser Foot (U)	1		
K-12	Throat Plate	1		
K-13	Main Feed (Back) Dog	1	146746-0-01	
K-14	Chain Feed Dog	1	146578-0-01	
K-15	Differential Feed (Front) Dog	1	146751-0-01	
K-16	Ruffling Blade	1	144783-0-01	
K-17	Washer	1	144784-0-01	
K-18	Screw	2	009660-7-12	
K-19	Ruffling Blade Base Shaft	1	145803-0-01	
K-20	Binder Base	1		146587-0-02
K-21	Screw	2	101706-0-01	
K-22	Set Collar	1		181995-0-02
K-23	Screw	2	101706-0-01	
K-24	Nut	1	105234-0-03	
K-25	Screw	1	110230-0-01	
K-26	Handle Fixing Plate	1		
K-27	Thread Tension Adjusting Nut	1	149566-0-02	

Ref. No.	Name of Parts	Q'ty	Parts No.	Assembly No.
K-28	Washer	1	144105-0-00	
K-29	Spring	1	144788-0-01	
K-30	Washer	1	025770-2-32	
K-31	Looper Thread Tension Control Stud	1	110820-0-01	
K-32	Screw	1	147933-0-01	
K-33	Spring	1	145811-0-01	
K-34	Screw	1	009680-6-12	
K-35	Screw	1	001670-5-12	
K-36	Spring	1	144764-0-01	
K-37	Bracket for Ruffling Blade	1		146587-0-02
K-38	Spring Base	1		
K-39	Screw	2	105163-0-01	
K-40	Screw	1	009680-6-12	
K-41	Spring	1	145808-0-01	
K-42	Ruffler Base	1		
K-43	Ruffling Blade Guide	2	145807-0-01	
K-44	Screw	2	009680-8-12	
K-45	Screw	1	013679-4-12	
K-46	Thread Guide Pipe	1	146592-0-01	
K-47	Nut	1	150553-0-02	
K-48	Screw	2	009781-8-12	
K-49	Ruffler Guide	1	144793-0-00	
K-50	Screw	1	112751-0-02	
K-51	Handle	1	145809-0-01	
K-52	Nut	1	150556-0-02	
K-53	Front Cover	1		
K-54	Spring	1	146442-0-01	
K-55	Front Cover Hinge	1	146440-0-01	146710-0-01
K-56	Front Cover Hinge Pin	1	146441-0-00	
K-57	Pin	1	047140-8-42	
K-58	Hinge Cover	1	148984-0-01	

NOTE! PREFIX ALL NUMBERS BY 'BR'.
EXAMPLE BR146222-0-01

L. 831U009-◌ (Ruffling (W/Piping))

This machine is the same as the 831U001-◌ machine, with the following exceptions:

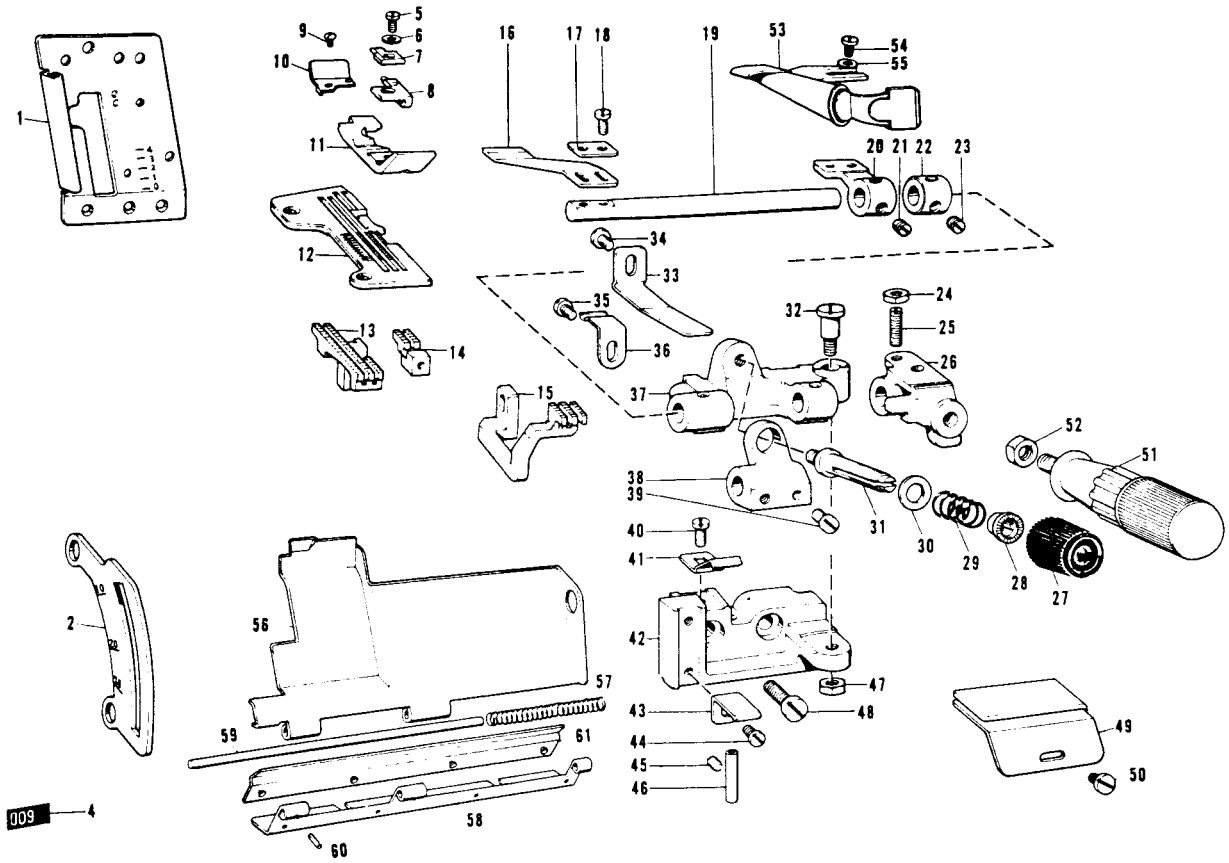

Ref. No.	Name of Parts	Q'ty	Parts No.	Assembly No.
L- 1	Face Plate	1	146430-0-01	
L- 2	Differential Feed Indicator	1	146562-0-01	
L- 4	Label	1		
L- 5	Screw	1	100080-0-04	
L- 6	Washer	1	025030-1-32	
L- 7	Presser Foot Plate	1	144091-0-01	
L- 8	Chaining-off Finger	1	144813-0-01	147433-0-01
L- 9	Screw	1	100105-0-05	
L-10	Presser Foot Chain Shield	1	144100-0-01	
L-11	Presser Foot	1		
L-12	Throat Plate	1		
L-13	Main Feed (Back) Dog	1	147828-0-01	
L-14	Chain Feed Dog	1	147832-0-01	
L-15	Differential Feed (Front) Dog	1	146751-0-01	
L-16	Ruffling Blade	1	144783-0-01	
L-17	Washer	1	144784-0-01	
L-18	Screw	2	009660-7-12	
L-19	Ruffling Blade Base Shaft	1	145803-0-01	
L-20	Binder Base	1		146587-0-02
L-21	Screw	2	101706-0-01	
L-22	Set Collar	1		
L-23	Screw	2	101706-0-01	181995-0-02
L-24	Nut	1	105234-0-03	
L-25	Screw	1	110230-0-01	
L-26	Handle Fixing Plate	1		
L-27	Thread Tension Adjusting Nut	1	149566-0-02	
L-28	Washer	1	144105-0-00	

NOTE! PREFIX ALL NUMBERS BY 'BR'.
EXAMPLE BR146222-0-01

Ref. No.	Name of Parts	Q'ty	Parts No.	Assembly No.
L-29	Spring	1	144788-0-01	
L-30	Washer	1	025770-2-32	
L-31	Looper Thread Tension Control Stud	1	110820-0-01	
L-32	Screw	1	147933-0-01	
L-33	Spring	1	145811-0-01	
L-34	Screw	1	009680-6-12	
L-35	Screw	1	001670-5-12	
L-36	Spring	1	144764-0-01	
L-37	Bracket for Ruffling Blade	1		
L-38	Spring Base	1		146587-0-02
L-39	Screw	2	105163-0-01	
L-40	Screw	1	009680-6-12	
L-41	Spring	1	145808-0-01	
L-42	Ruffler Base	1		
L-43	Ruffling Blade Guide	2	145807-0-01	
L-44	Screw	2	009680-8-12	
L-45	Screw	1	013679-4-12	
L-46	Thread Guide Pipe	1	146592-0-01	
L-47	Nut	1	150553-0-02	
L-48	Screw	2	009781-8-12	
L-49	Ruffler Guide	1	144793-0-00	
L-50	Screw	1	112751-0-02	
L-51	Handle	1	145809-0-01	
L-52	Nut	1	150556-0-02	
L-53	Binder	1	147440-0-00	
L-54	Screw	2	009680-6-12	
L-55	Washer	2	110735-0-02	
L-56	Front Cover	1		
L-57	Spring	1	146442-0-01	
L-58	Front Cover Hinge	1	146440-0-01	146710-0-01
L-59	Front Cover Hinge Pin	1	146441-0-00	
L-60	Pin	1	047140-8-42	
L-61	Hinge Cover	1	148984-0-01	

N. 831U011-◌ (Taping on Bulky Knit Work)

This machine is the same as the 831U001-◌ machine, with the following exceptions :

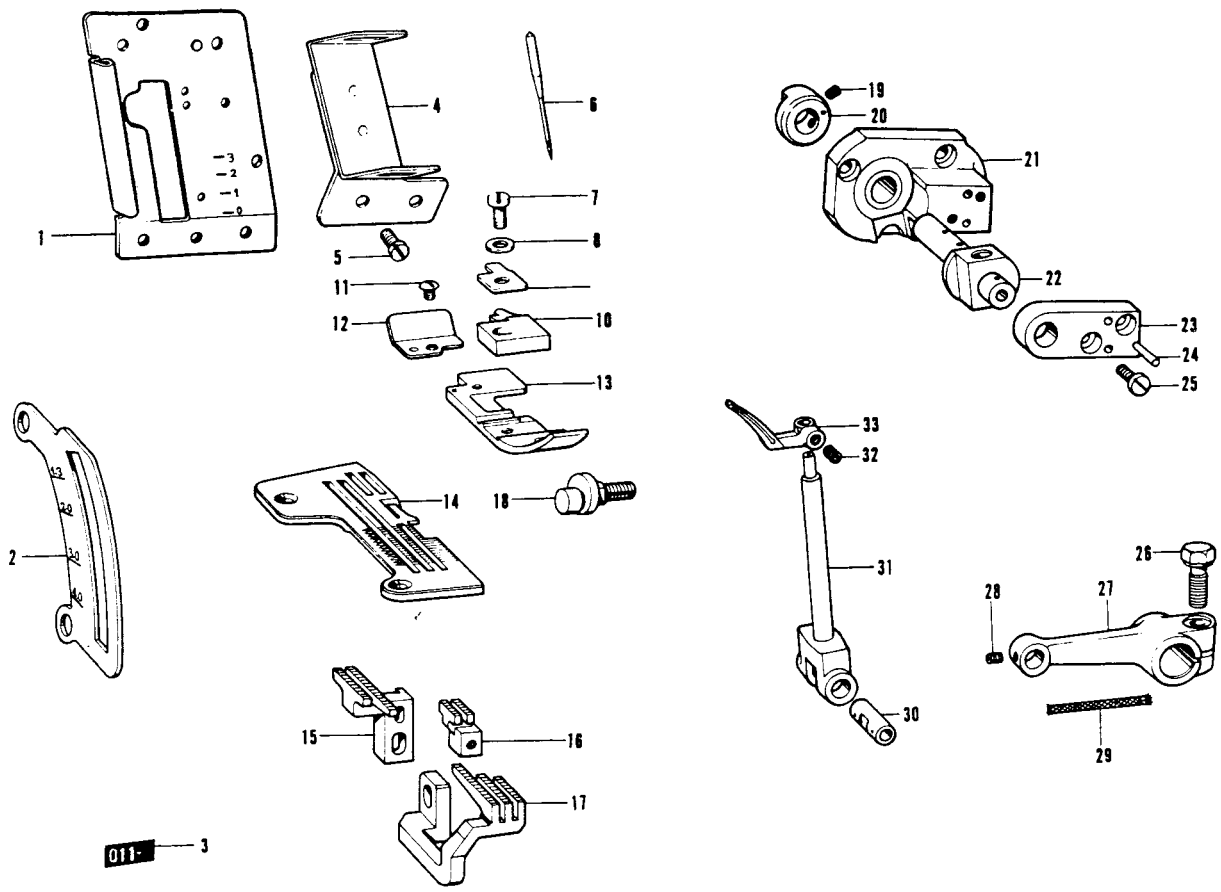

Ref. No.	Name of Parts	Q'ty	Parts No.	Assembly No.	Ref. No.	Name of Parts	Q'ty	Parts No.	Assembly No.
N- 1	Face Plate	1	146706-0-01		N-18	Main Feed Shaft	1	144068-0-01	
N- 2	Differential Feed Indicator	1	146742-0-01		N-19	Screw	2	014680-4-22	
N- 3	Label	1			N-20	Set Collar	1		
N- 4	Tape Guide	1	146883-0-01		N-21	Looper (Right Hand) Holder Guide Base	1		
N- 5	Screw	2	009669-4-12		N-22	Looper (Right Hand) Holder Guide Block	1		
N- 6	Needle Cat. No. 6120 #14	1	151200-0-14		N-23	Looper (Right Hand) Holder Supporting Plate	1		
N- 7	Screw	1	100080-0-04		N-24	Taper Pin	2		146611-1-01
N- 8	Washer	1	025030-1-32		N-25	Screw	2	009681-0-12	
N- 9	Presser Foot Hinge Spring	1	146887-0-01		N-26	Screw	1	149170-0-01	
N-10	Chaining-off Finger	1	146897-0-01	146895-0-01	N-27	Looper (Right Hand) Driving Lever	1		
N-11	Screw	1	100105-0-05		N-28	Screw	1	148294-0-01	
N-12	Presser Foot (Rear)	1	145774-0-01		N-29	Wick	1	140416-0-00	
N-13	Presser Foot	1			N-30	Looper (Right Hand) Holding Shaft	1		
N-14	Throat Plate	1			N-31	Looper (Right Hand) Holder	1		
N-15	Main Feed (Back) Dog	1	146745-0-01		N-32	Screw	1	014680-4-22	147937-0-01
N-16	Chain Feed Dog	1	146578-0-01		N-33	Looper (Right Hand)	1		
N-17	Differential Feed (Front) Dog	1	146750-0-01						

NOTE! PREFIX ALL NUMBERS BY 'BR'.
EXAMPLE BR146222-0-01

N'. 831U012-◯ (Chain-back)

This machine is the same as the 831U001-◯ machine, with the following exceptions :

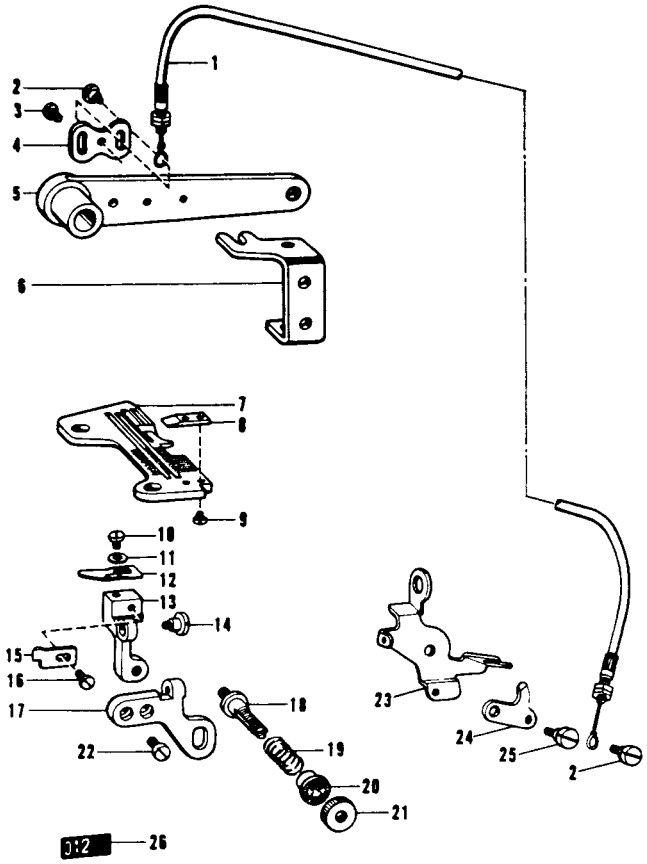

Ref. No.	Name of Parts	Q'ty	Parts No.	Assembly No.
N'-1	Flexible Wire Assembly	1	147480-0-01	
N'-2	Screw	2	141514-0-01	
N'-3	Screw	2	009670-6-12	
N'-4	Wire Plate	1	147672-0-01	
N'-5	Presser Foot Lifter Lever	1	148369-0-01	
N'-6	Lever Adjuster Plate	1	147454-0-01	
N'-7	Throat Plate	1		
N'-8	Chain-Back Guide	1	147484-0-01	
N'-9	Screw	2	141544-0-01	
N'-10	Screw	1	009660-4-12	
N'-11	Washer	1	025030-1-32	
N'-12	Chain-Back Blade Presser Plate	1	147477-0-01	
N'-13	Chain-Back Blade Holder	1		
N'-14	Screw	1	147476-0-01	
N'-15	Chain-Back Knife	1	147478-0-01	
N'-16	Screw	1	009660-4-12	147473-0-01
N'-17	Chain-Back Blade Holder Supporter	1		
N'-18	Thread Tension Control Stud	1	147148-0-01	
N'-19	Spring	1	147479-0-01	
N'-20	Washer	1	144105-0-00	
N'-21	Upper Thread Tension Adjusting Screw	1	105230-0-01	
N'-22	Screw	2	009670-6-12	
N'-23	Thread Guide Support	1	147485-0-01	
N'-24	Tension Release Lever	1	147483-0-01	
N'-25	Screw	1	141514-0-01	
N'-26	Label	1		

NOTE! PREFIX ALL NUMBERS BY 'BR'.
EXAMPLE BR146222-0-01

K'. 831U007-◯ (Turn-down Hemming)

This machine is the same as the 831U001-◯ machine, with the following exceptions :

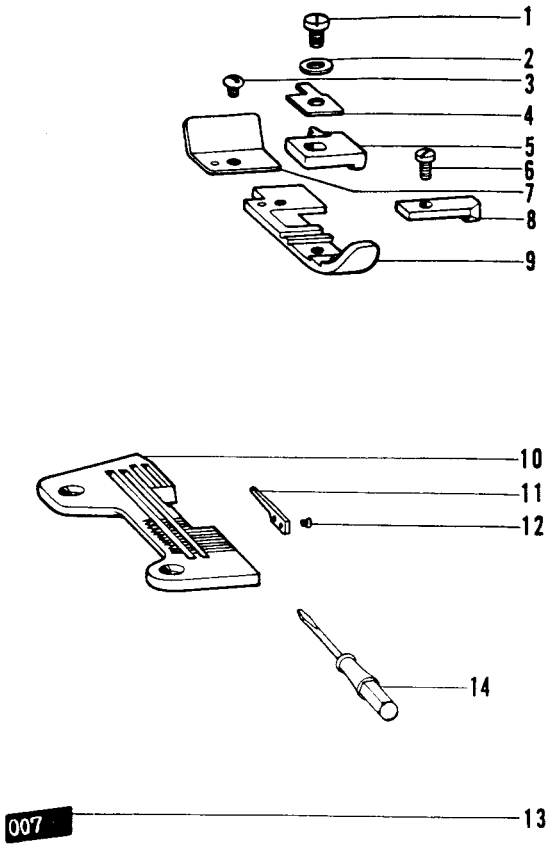

Ref. No.	Name of Parts	Q'ty	Parts No.	Assembly No.
K'-1	Screw	1	100080-0-04	
K'-2	Washer	1	025030-1-32	
K'-3	Screw	1	100105-0-05	
K'-4	Presser Foot Hinge Spring	1	146887-0-01	8R
K'-5	Chaining-off Finger	1	148313-0-01	148311-1-01
K'-6	Screw	1	009639-3-12	
K'-7	Presser Foot (Rear)	1	146889-0-01	154976001
K'-8	Presser Foot (Front)	1	146888-0-01	
K'-9	Presser Foot	1		
K'-10	Throat Plate	1		
K'-11	Finger Plate	1	148354-0-01	
K'-12	Screw	1	148355-0-01	
K'-13	Label	1		
K'-14	Screw Driver	1	148925-0-01	

NOTE! PREFIX ALL NUMBERS BY 'BR'.
EXAMPLE BR146222-0-01

P. Cord Guide

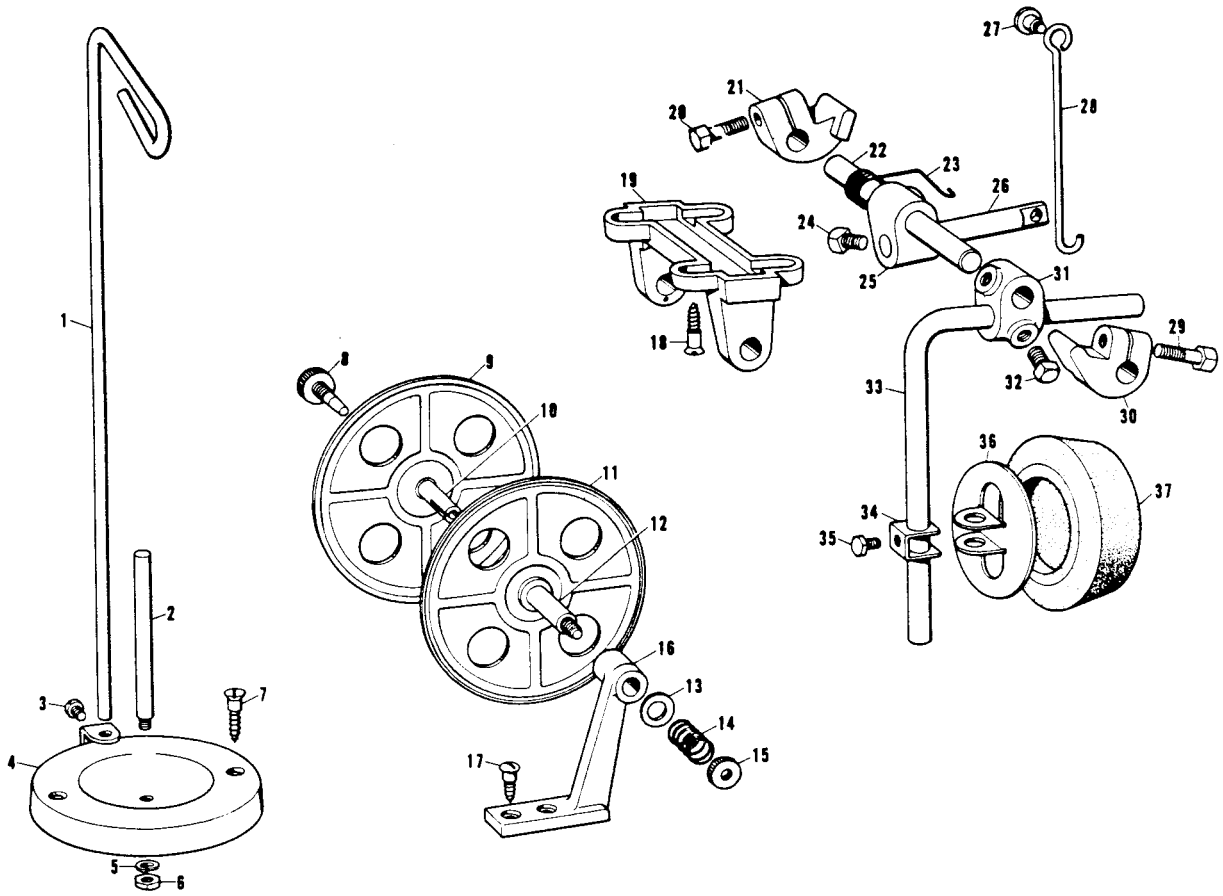

Ref. No.	Name of Parts	Q'ty	Parts No.	Assembly No.
P- 1	Thread Guide	1	109853-0-01	181031-0-01
P- 2	Spool Pin	1	100[illegible]44-0-02	
P- 3	Screw	1	100080-0-02	
P- 4	Disc for Spool	1	109852-0-01	
P- 5	Washer	1	028050-2-42	
P- 6	Nut	1	110161-0-03	
P- 7	Screw	2	100447-0-01	
P- 8	Screw	1	143980-0-01	
P- 9	Tape Winder Wheel (L)	1		143978-0-01
P-10	Tape Winder Shaft (L)	1		
P-11	Tape Winder Wheel (R)	1		143976-0-01
P-12	Tape Winder Shaft (R)	1		
P-13	Washer	1	108494-0-01	143767-0-02
P-14	Spring	1	108495-0-01	
P-15	Nut	1	100136-0-01	
P-16	Tape Winder Bracket	1	143750-0-02	
P-17	Screw	2	101118-0-01	
P-18	Screw	4	033452-5-02	151224-0-01
P-19	Knee Lifter Shaft Bracket	1	144803-0-01	

Ref. No.	Name of Parts	Q'ty	Parts No.	Assembly No.
P-20	Screw	1	017762-2-03	151224-0-01
P-21	Collar	1	104890-0-02	
P-22	Knee Lifter Shaft	1	144804-0-01	
P-23	Spring	1	144806-0-01	
P-24	Screw	2	100463-0-01	
P-25	Knee Lifter Bracket	1	143989-0-01	
P-26	Knee Lifter Lever	1	144805-0-01	
P-29	Screw	1	017762-2-03	
P-30	Collar	1	104890-0-02	
P-31	Knee Lifter Bracket	1	143989-0-01	180814-0-01
P-32	Screw	2	100463-0-01	
P-33	Knee Lifter Bar	1	104619-0-02	
P-34	Knee Lifter Plate Stopper	1	114967-0-01	
P-35	Screw	1	110087-0-01	
P-36	Knee Lifter Plate	1	114966-0-01	
P-37	Knee Lifter Cover	1	140503-0-01	
P-27	Stud Screw	1	146594-0-01	
P-28	Connecting Bar	1	146593-0-01	

★Above-mentioned parts are accessories for 831U-009–◯·832U-037–◯·038–◯ Piping Ruffler.
★The parts of P-18~37 are for Ruffler 831U-008–◯·832U-033–◯··034–◯.
★Then the parts of P-1~17 are for Piping 832U-050–◯.

[NOTE! PREFIX ALL NUMBERS BY 'BR'.
EXAMPLE BR146222-0-01]

Q. Ruffler Interlocking Parts Assembly

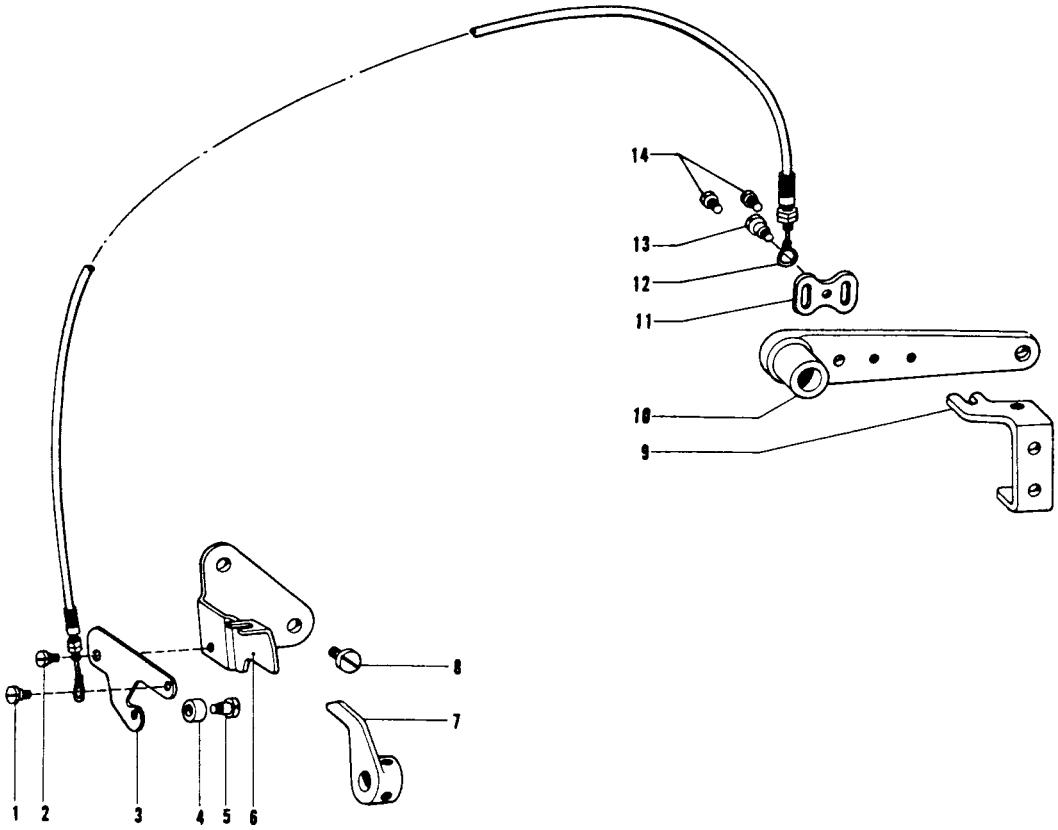

Ref. No.	Name of Parts	Q'ty	Parts No.	Assembly No.	Ref. No.	Name of Parts	Q'ty	Parts No.	Assembly No.
Q- 1	Screw	1	141514-0-01		Q- 8	Screw	1	009680-8-12	
Q- 2	Screw	1	141514-0-01		Q- 9	Lever Adjuster Plate	1	147454-0-01	
Q- 3	Ruffling Plate Lifter Lever	1	148388-0-01		Q-10	Presser Foot Lifter Lever	1	148369-0-01	
Q- 4	Roller	1	148390-0-01	148395-0-01	Q-11	Wire Plate	1	147672-0-01	151227-0-02
Q- 5	Screw	1	112301-0-01		Q-12	Flexible Wire Assembly	1	148391-0-01	
Q- 6	Presser Foot Lifter Lever Support	1	148389-0-01		Q-13	Screw	1	141514-0-01	
Q- 7	Presser Foot Lifter	1	148387-0-01		Q-14	Screw	2	009670-6-12	

★Above-mentioned parts are accessories for 831U-008-◯ Ruffler, 831U-009-◯ Piping Ruffler, 832U-033-◯ · 034-◯ Ruffler and 832U-037-◯ ·038-◯ Piping Ruffler.

[NOTE! PREFIX ALL NUMBERS BY 'BR'.
EXAMPLE BR146222-0-01]

Y. Accessories

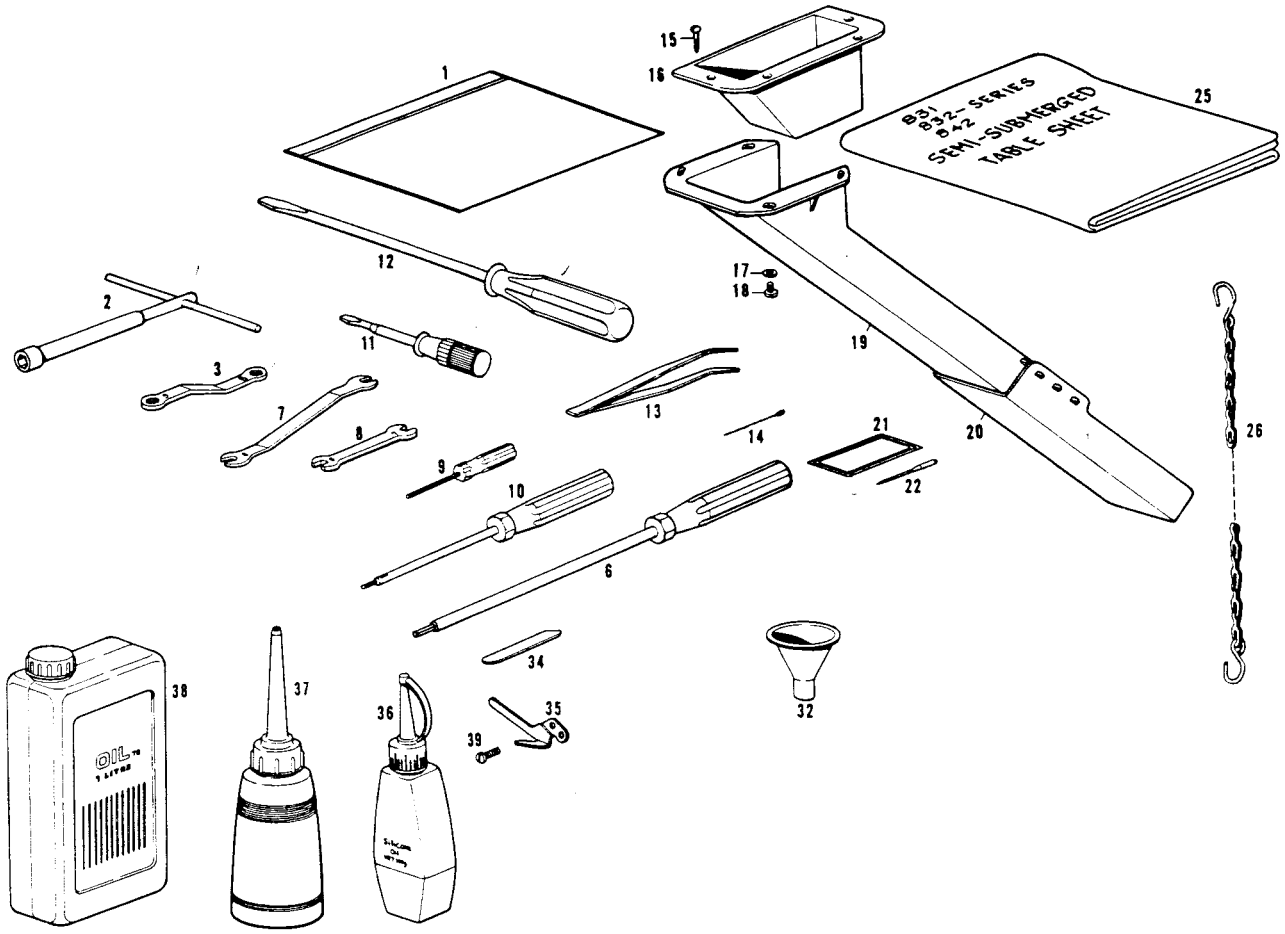

Ref. No.	Name of Parts	Q'ty	Parts No.	Assembly No.
Y- 1	Vinyl Bag	1	122991-0-02	
Y- 2	Wrench	1	140342-0-01	
Y- 3	Wrench	1	105343-0-01	
Y- 6	Screw Driver for Socket Hand	1	149173-0-01	
Y- 7	Wrench 8	1	143566-0-01	
Y- 8	Wrench 6×7	1	107779-0-01	
Y- 9	Screw Driver for Socket Hand	1	144124-0-01	
Y-10	Screw Driver for Socket Hand	1	146700-0-01	
Y-11	Screw Driver	1	118837-0-01	
Y-12	Screw Driver	1	101572-1-01	
Y-13	Tweezers	1	117466-0-00	
Y-14	Threader	3	142125-0-00	
Y-15	Screw	4	031311-3-02	
Y-16	Chip Chute Bracket	1	148430-0-01	
Y-17	Washer	4	025680-2-32	
Y-18	Screw	4	009681-0-12	
Y-19	Chip Chute (L)	1	148431-0-01	

Ref. No.	Name of Parts	Q'ty	Parts No.	Assembly No.
Y-20	Chip Chute (S)	1	148432-0-01	
Y-21	Needle Envelope			
Y-22	Needle (Cat. No. 6120 or 6122)		151200-	
Y-25	Table Sheet	1	147698-0-02	
Y-26	Chain Assembly	1	142262-0-01	
Y-32	Funnel	1	140759-0-00	
Y-34	Stationary Knife	1	112436-0-01	
Y-35	Chain Cutter	1	140888-0-01	
Y-36	Silicone Oil	1	142343-0-01	
Y-37	Oiler	1	114483-0-02	
Y-38	Oil Vessel	1	145277-1-04	
Y-39	Screw	2	009669-4-12	

Ref. No.	Name of Parts	831U	832U
Y-21	Needle Envelope	1	2
Y-22	Needle (Cat. No. 6120 or 6122)	5	10

NOTE! PREFIX ALL NUMBERS BY 'BR'.
EXAMPLE BR146222-0-01

Z. Machine Base Plate and Thread Unwinder 3 THF

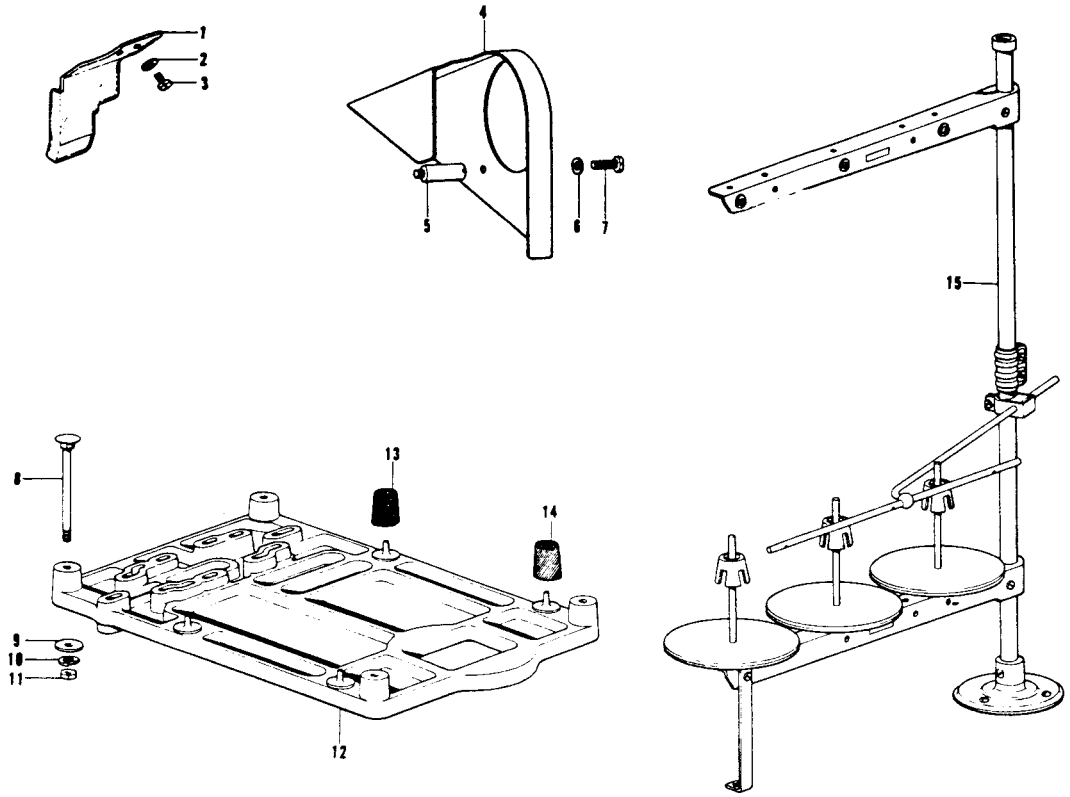

Ref. No.	Name of Parts	Q'ty	Parts No.	Assembly No.
Z- 1	Eye Guard	1		151017-0-01
Z- 2	Washer	2	025030-2-32	
Z- 3	Screw	3	009660-5-12	
Z- 4	Belt Cover	1		148348-0-01
Z- 5	Belt Cover Stud	2	148042-0-01	
Z- 6	Washer	2	113431-0-02	
Z- 7	Screw	2	009681-0-12	
Z- 8	Screw	4	210973-0-01	

Ref. No.	Name of Parts	Q'ty	Parts No.	Assembly No.
Z- 9	Washer	4	025080-2-36	
Z-10	Washer	4	028080-2-42	
Z-11	Nut	4	021080-1-06	
Z-12	Machine Base Plate	1	148447-0-00	
Z-13	Rubber Cushion	1	147919-0-01	
Z-14	Rubber Cushion	3	147919-0-02	
Z-15	Thread Unwinder 3 THF	1	150160-0-02	

NOTE! PREFIX ALL NUMBERS BY 'BR'.
EXAMPLE BR146222-0-01

a. Common Parts for All 832U Varieties

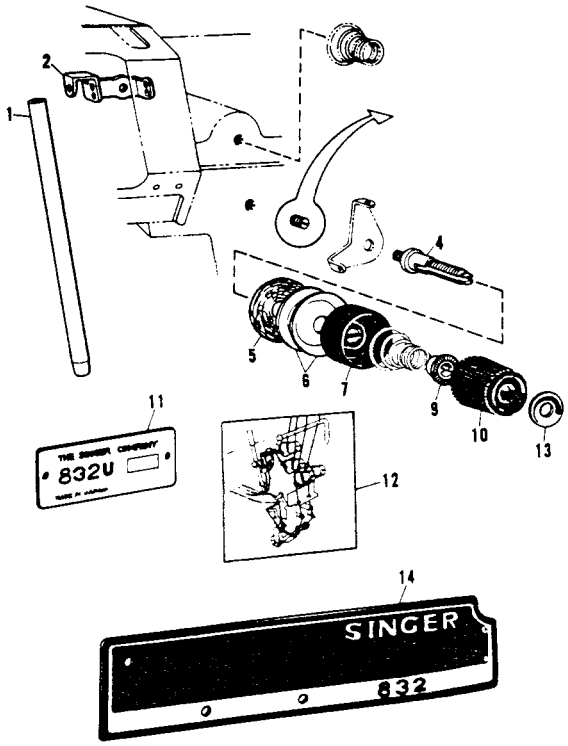

Ref. No.	Name of Parts	Q'ty	Parts No.	Assembly No.
a- 1	Needle Bar	1	146483-0-01	
a- 2	Needle Thread Guide	1	146793-0-01	
a- 4	Looper Thread Tension Control Stud	1	110820-0-01	
a- 5	Felt	1	110832-0-01	
a- 6	Tension Disc	2	145446-0-01	
a- 7	Tension Disc Washer	1	144103-0-02	
a- 9	Washer	1	144105-0-00	
a-11	Model Plate 832U	1		
a-12	Threading Diagram	1	146765-0-01	
a-10	Thread Tension Adjusting Nut	1		151201-0-01
a-13	Color Plate	1	147049-0-01	
a-14	Name Plate F	1		

NOTE! PREFIX ALL NUMBERS BY 'BR'.
EXAMPLE BR146222-0-01

b. 832U021-◯ Needle Gauge 1.8 mm (Light Work)

This machine is the same as the 831U001-◯ (A~H) with exceptions of 832U Common Parts (Page 20, a) and Parts shown below :

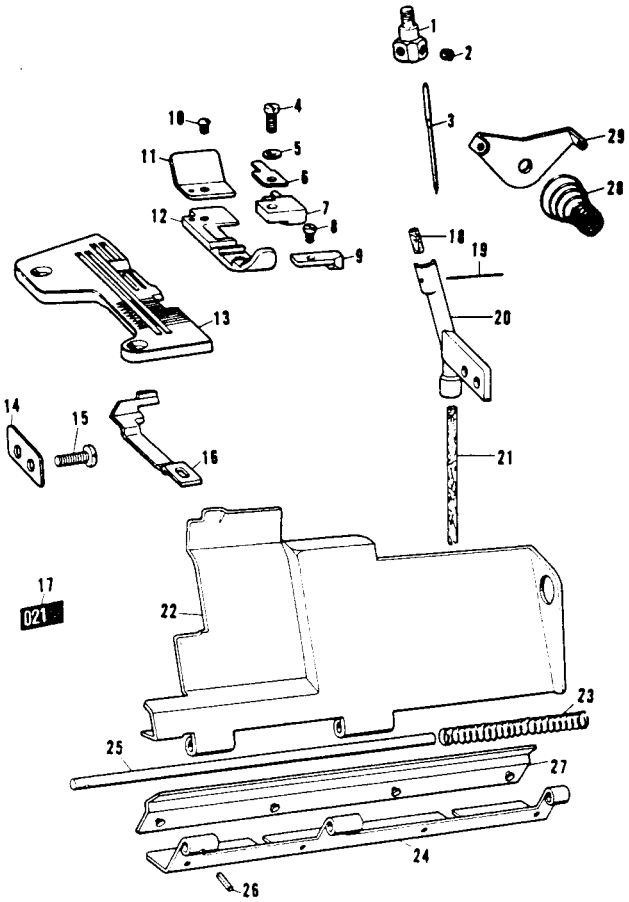

Ref. No.	Name of Parts	Q'ty	Parts No.	Assembly No.
b- 1	Needle Clamp 1.8	1		146771-0-01
b- 2	Screw	2	146427-0-01	
b- 3	Needle Cat. No. 8538 #11	2	151206-0-11	
b- 4	Screw	1	100080-0-04	
b- 5	Washer	1	025030-1-32	
b- 6	Presser Foot Hinge Spring	1	146887-0-01	
b- 7	Chaining-off Finger	1	146964-0-01	
b- 8	Screw	1	009639-3-12	146963-0-01
b- 9	Presser Foot (Front)	1	146888-0-01	
b-10	Screw	1	100105-0-05	
b-11	Presser Foot (Rear)	1	146889-0-01	
b-12	Presser Foot	1		
b-13	Throat Plate	1		
b-14	Spacer	1	146787-0-01	
b-15	Screw	2	105216-0-01	
b-16	Needle Guard F	1	146777-0-01	
b-17	Label	1		
b-18	Felt (S)	1	146740-0-00	
b-19	Steel Wire	1	147738-0-00	148008-0-00
b-20	Felt Holder	1	148009-0-00	
b-21	Felt	1	144116-0-00	
b-22	Front Cover	1		
b-23	Spring	1	146442-0-01	
b-24	Front Cover Hinge	1	146440-0-01	148993-0-01
b-25	Front Cover Hinge Pin	1	146441-0-00	
b-26	Pin	1	047140-8-42	
b-27	Hinge Cover	1	148984-0-01	
b-28	Spring	2	144104-0-01	
b-29	Needle Thread Guide Plate	1	110813-0-01	

NOTE! PREFIX ALL NUMBERS BY 'BR'.
EXAMPLE BR146222-0-01

c. 832U022-◯ Needle Gauge 2.2 mm (Light and Medium Work)

This machine is the same as the 831U001-◯ (A ~ H) with exceptions of 832U Common Parts (Page 20, a) and Parts shown below :

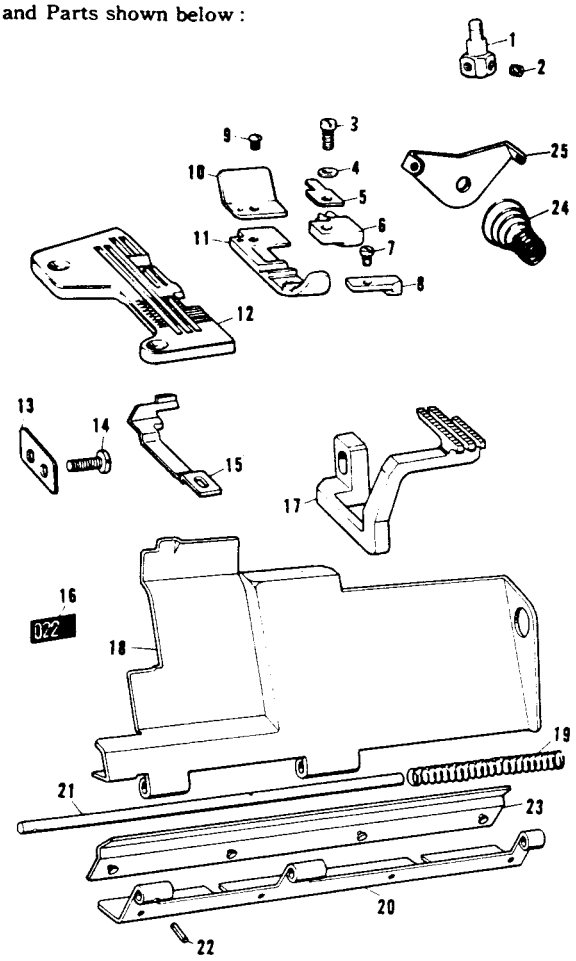

Ref. No.	Name of Parts	Q'ty	Parts No.	Assembly No.
c- 1	Needle Clamp 2.2	1		146773-0-01
c- 2	Screw	2	146427-0-01	
c- 3	Screw	1	100080-0-04	146902-0-01
c- 4	Washer	1	025030-1-32	
c- 5	Presser Foot Hinge Spring	1	146887-0-01	
c- 6	Chaining-off Finger	1	146903-0-01	
c- 7	Screw	1	009639-3-12	
c- 8	Presser Foot (Front)	1	146888-0-01	
c- 9	Screw	1	100105-0-05	
c-10	Presser Foot (Rear)	1	146889-0-01	
c-11	Presser Foot	1		
c-12	Throat Plate	1		
c-13	Spacer	1	146787-0-01	
c-14	Screw	2	105216-0-01	
c-15	Needle Guard F	1	146777-0-01	
c-16	Label	1		
c-17	Differential Feed (Front) Dog	1	146749-0-01	
c-18	Front Cover	1		148993-0-01
c-19	Spring	1	146442-0-01	
c-20	Front Cover Hinge	1	146440-0-01	
c-21	Front Cover Hinge Pin	1	146441-0-00	
c-22	Pin	1	047140-8-42	
c-23	Hinge Cover	1	148984-0-01	
c-24	Spring	2	144104-0-01	
c-25	Needle Thread Guide Plate	1	110813-0-01	

NOTE! PREFIX ALL NUMBERS BY 'BR'.
EXAMPLE BR146222-0-01

d. 832U023-◯ Needle Gauge 2.2 mm (Light and Medium Work)

This machine is the same as the 831U001-◯ (A ~ H) with exceptions of 832U Common Parts (Page 20, a) and Parts shown below :

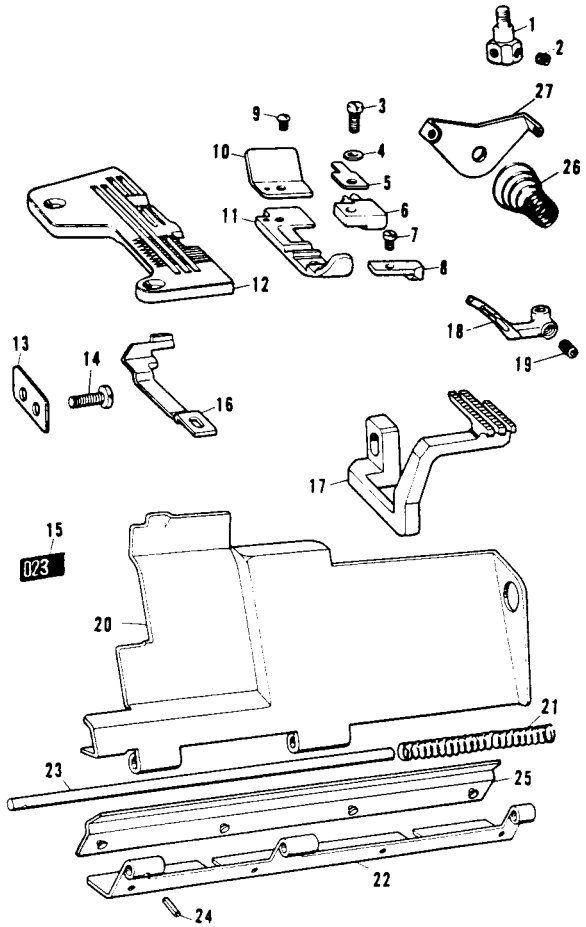

Ref. No.	Name of Parts	Q'ty	Parts No.	Assembly No.
d- 1	Needle Clamp 2.2	1		146773-0-01
d- 2	Screw	2	146427-0-01	
d- 3	Screw	1	100080-0-04	146902-0-01
d- 4	Washer	1	025030-1-32	
d- 5	Presser Foot Hinge Spring	1	146887-0-01	
d- 6	Chaining-off Finger	1	146903-0-01	
d- 7	Screw	1	009639-3-12	
d- 8	Presser Foot (Front)	1	146888-0-01	
d- 9	Screw	1	100105-0-05	
d-10	Presser Foot (Rear)	1	146889-0-01	
d-11	Presser Foot	1		
d-12	Throat Plate	1		
d-13	Spacer	1	146787-0-01	
d-14	Screw	2	105216-0-01	
d-15	Label	1		
d-16	Needle Guard F	1	146777-0-01	
d-17	Differential Feed (Front) Dog	1	146749-0-01	
d-18	Looper (Right Hand)	1		147936-0-01
d-19	Screw	1	014680-4-22	
d-20	Front Cover	1		148993-0-01
d-21	Spring	1	146442-0-01	
d-22	Front Cover Hinge	1	146440-0-01	
d-23	Front Cover Hinge Pin	1	146441-0-00	
d-24	Pin	1	047140-8-42	
d-25	Hinge Cover	1	148984-0-01	
d-26	Spring	2	144104-0-01	
d-27	Needle Thread Guide Plate	1	110813-0-01	

NOTE! PREFIX ALL NUMBERS BY 'BR'.
EXAMPLE BR146222-0-01

b'. 832U024-◯ Needle Gauge 3 mm (Light and Medium Work)

This machine is the same as the 831U001- (A ~ H) with exceptions of 832U Common Parts (Page 20, a) and Parts shown below :

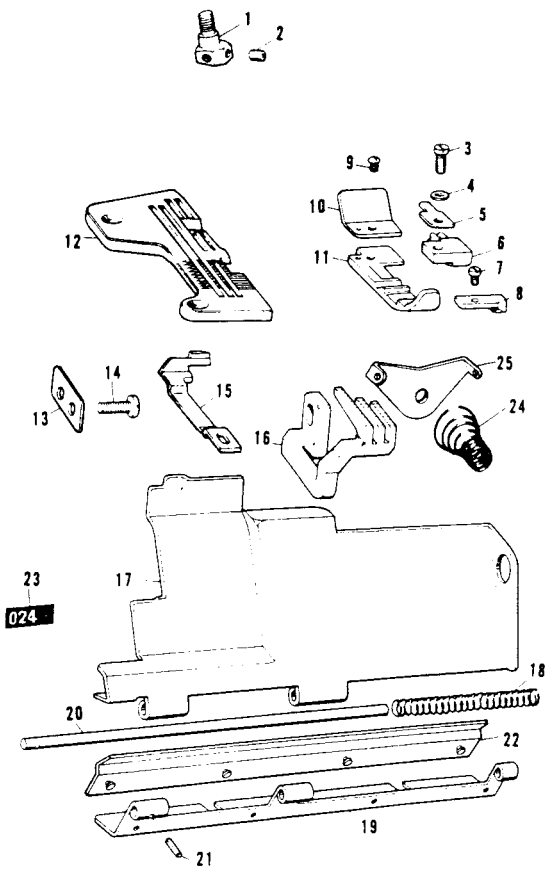

Ref. No.	Name of Parts	Q'ty	Parts No.	Assembly No.
b - 1	Needle Clamp 3	1		146775-0-01
b - 2	Screw	2	146427-0-01	
b - 3	Screw	1	100080-0-04	
b - 4	Washer	1	025030-1-32	
b - 5	Presser Foot Hinge Spring	1	146887-0-01	
b - 6	Chaining-off Finger	1	146966-0-01	
b - 7	Screw	1	009639-3-12	146965-0-01
b - 8	Presser Foot (Front)	1	146888-0-01	
b - 9	Screw	1	100105-0-05	
b -10	Presser Foot (Rear)	1	146889-0-01	
b -11	Presser Foot	1		
b -12	Throat Plate	1		
b -13	Spacer	1	146788-0-01	
b -14	Screw	2	105216-0-01	
b -15	Needle Guard F	1	146778-0-01	
b -16	Differential feed (Front) Dog	1	146749-0-01	
b -17	Front Cover	1		
b -18	Spring	1	146442-0-01	
b -19	Front Cover Hinge	1	146440-0-01	148995-0-01
b -20	Front Cover Hinge Pin	1	146441-0-00	
b -21	Pin	1	047140-8-42	
b -22	Hinge Cover	1	148984-0-01	
b -23	Label	1		
b -24	Spring	2	144104-0-01	
b -25	Needle Thread Guide Plate	1	110813-0-01	

NOTE! PREFIX ALL NUMBERS BY 'BR'.
EXAMPLE BR146222-0-01

c'. 832U025-◯ Needle Gauge 3 mm (Light and Medium Work)

This machine is the same as the 831U001- (A ~ H) with exceptions of 832U Common Parts (Page 20, a) and Parts shown below :

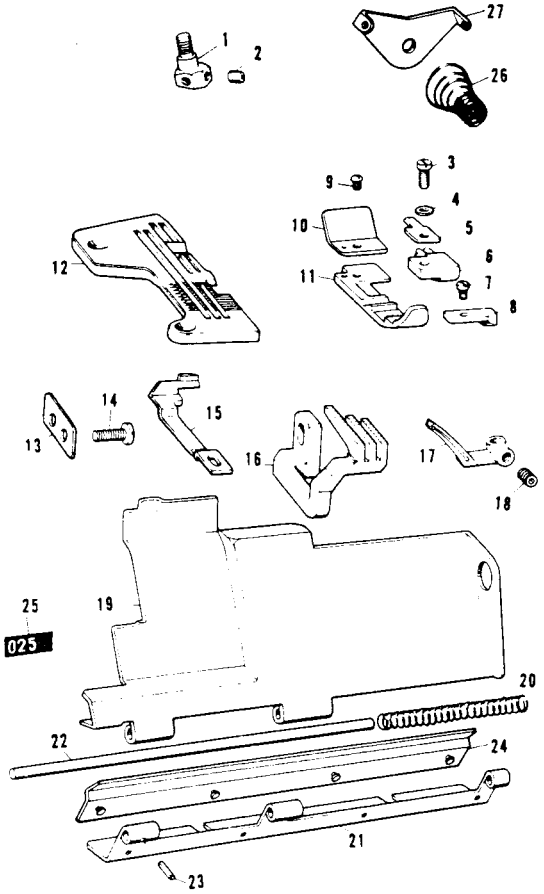

Ref. No.	Name of Parts	Q'ty	Parts No.	Assembly No.
c - 1	Needle Clamp 3	1		146775-0-01
c - 2	Screw	2	146427-0-01	
c - 3	Screw	1	100080-0-04	
c - 4	Washer	1	025030-1-32	
c - 5	Presser Foot Hinge Spring	1	146887-0-01	
c - 6	Chaining-off Finger	1	146966-0-01	
c - 7	Screw	1	009639-3-12	146965-0-01
c - 8	Presser Foot (Front)	1	146888-0-01	
c - 9	Screw	1	100105-0-05	
c -10	Presser Foot (Rear)	1	146889-0-01	
c -11	Presser Foot	1		
c -12	Throat Plate	1		
c -13	Spacer	1	146788-0-01	
c -14	Screw	2	105216-0-01	
c -15	Needle Guard F	1	146778-0-01	
c -16	Differential Feed (Front) Dog	1	146749-0-01	
c -17	Looper (Right Hand)	1		147936-0-01
c -18	Screw	1	014680-4-22	
c -19	Front Cover	1		
c -20	Spring	1	146442-0-01	
c -21	Front Cover Hinge	1	146440-0-01	148995-0-01
c -22	Front Cover Hinge Pin	1	146441-0-00	
c -23	Pin	1	047140-8-42	
c -24	Hinge Cover	1	148984-0-01	
c -25	Label	1		
c -26	Spring	2	144104-0-01	
c -27	Needle Thread Guide Plate	1	110813-0-01	

NOTE! PREFIX ALL NUMBERS BY 'BR'.
EXAMPLE BR146222-0-01

d'. 832U026-◯ Needle Gauge 1.8 mm (Bulky Knit Work)

This machine is the same as the 831U001-◯ (A~H) with exceptions of 832U Common Parts (Page 20, a) and Parts shown below :

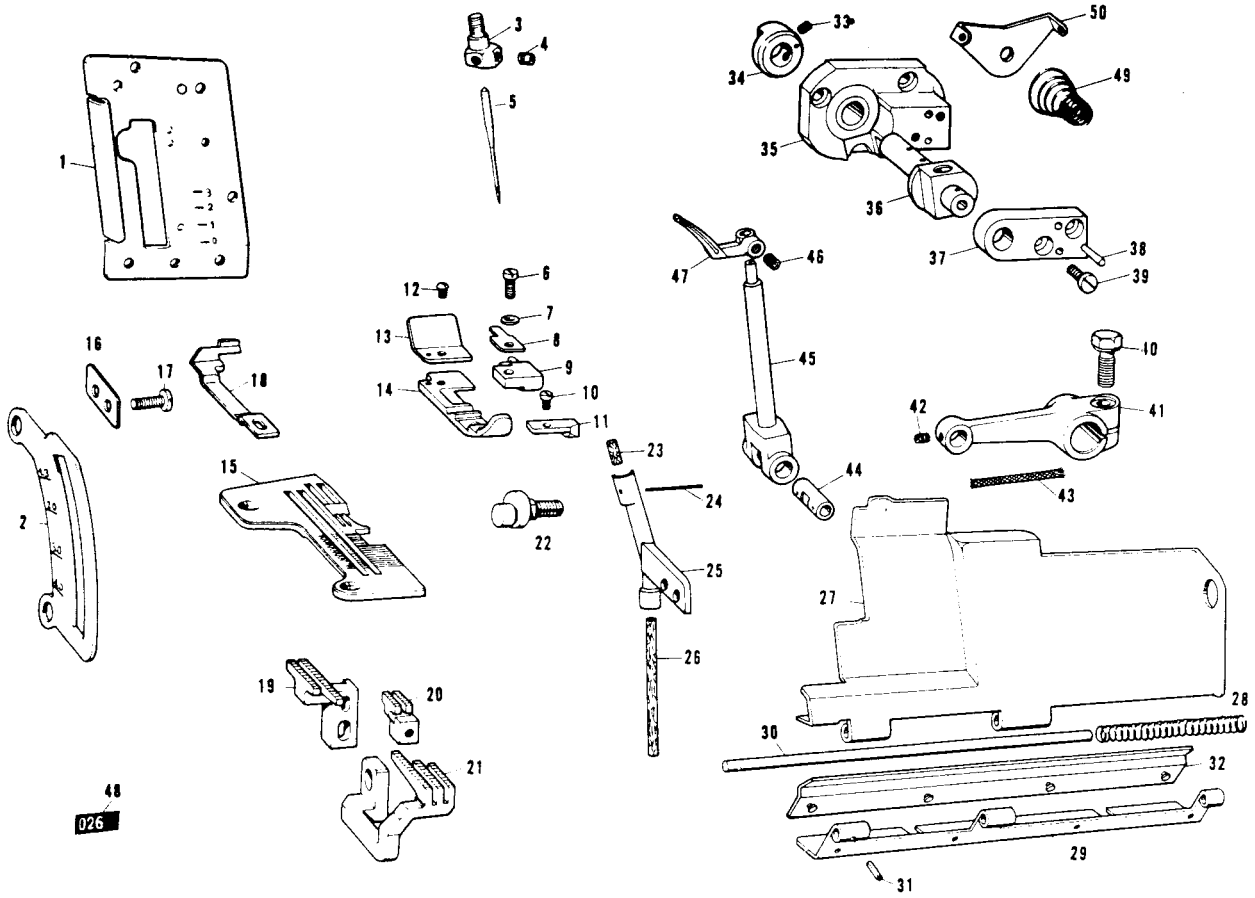

Ref. No.	Name of Parts	Q'ty	Parts No.	Assembly No.
d'-1	Face Plate	1	146706-0-01	
d'-2	Differential Feed Indicator	1	146742-0-01	
d'-3	Needle Clamp 1.8	1		146771-0-01
d'-4	Screw	2	146427-0-01	
d'-5	Needle Cat. No. 8538 #11	2	151206-0-11	
d'-6	Screw	1	100080-0-04	
d'-7	Washer	1	025030-1-32	
d'-8	Presser Foot Hinge Spring	1	146887-0-01	
d'-9	Chaining-off Finger	1	146964-0-01	
d'-10	Screw	1	009639-3-12	146963-0-01
d'-11	Presser Foot (Front)	1	146888-0-01	
d'-12	Screw	1	100105-0-05	
d'-13	Presser Foot (Rear)	1	146889-0-01	
d'-14	Presser Foot	1		
d'-15	Throat Plate	1		
d'-16	Spacer	1	146787-0-01	
d'-17	Screw	2	105216-0-01	
d'-18	Needle Guard F	1	146777-0-01	
d'-19	Main Feed (Back) Dog	1	148401-0-01	
d'-20	Chain Feed Dog	1	146578-0-01	
d'-21	Differential Feed (Front) Dog	1	148402-0-01	
d'-22	Main Feed Shaft	1	144068-0-01	
d'-23	Felt (S)	1	146740-0-00	
d'-24	Steel Wire	1	147738-0-00	
d'-25	Felt Holder	1	148009-0-00	148008-0-00

Ref. No.	Name of Parts	Q'ty	Parts No.	Assembly No.
d'-26	Felt	1	144116-0-00	148008-0-00
d'-27	Front Cover	1		
d'-28	Spring	1	146442-0-01	
d'-29	Front Cover Hinge	1	146440-0-01	
d'-30	Front Cover Hinge Pin	1	146441-0-00	148993-0-01
d'-31	Pin	1	047140-8-42	
d'-32	Hinge Cover	1	148984-0-01	
d'-33	Screw	2	014680-4-22	
d'-34	Set Collar	1		
d'-35	Looper (Right Hand) Holder Guide Base	1		
d'-36	Looper (Right Hand) Holder Guide Block	1		
d'-37	Looper (Right Hand) Holder Supporting Plate	1		
d'-38	Taper Pin	2		
d'-39	Screw	2	009681-0-12	146611-1-01
d'-40	Screw	1	149170-0-01	
d'-41	Looper (Right Hand) Driving Lever	1		
d'-42	Screw	1	148294-0-01	
d'-43	Wick	1	140416-0-00	
d'-44	Looper (Right Hand) Holding Shaft	1		
d'-45	Looper (Right Hand) Holder	1		
d'-46	Screw	1	014680-4-22	
d'-47	Looper (Right Hand)	1		147937-0-01
d'-48	Label	1		
d'-49	Spring	2	144104-0-01	
d'-50	Needle Thread Guide Plate	1	110813-0-01	

NOTE! PREFIX ALL NUMBERS BY 'BR'.
EXAMPLE BR146222-0-01

e. 832U027-◌ Needle Gauge 2.2 mm (Bulky Knit Work)

This machine is the same as the 831U001-◌ (A~H) with exceptions of 832U Common Parts (Page 20, a) and Parts shown below :

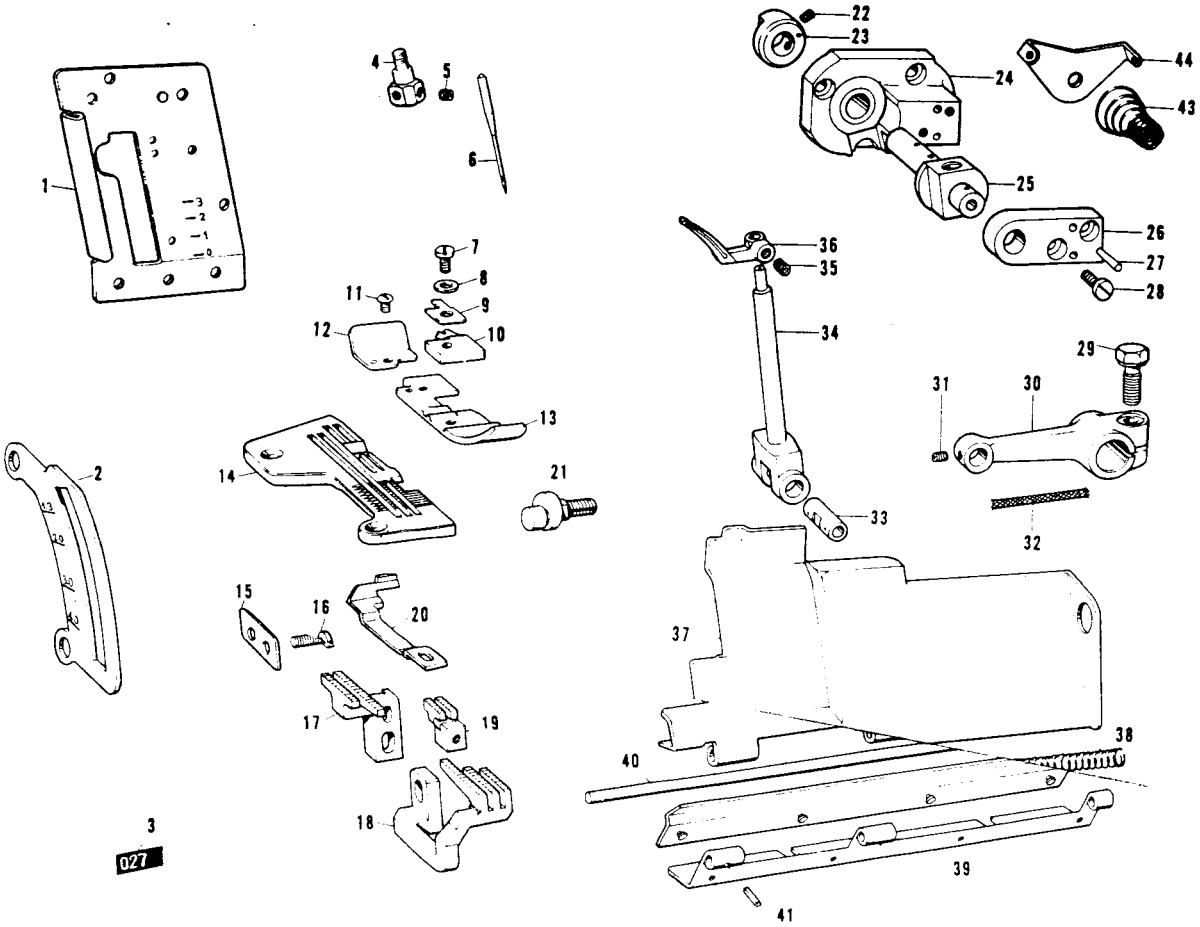

Ref. No.	Name of Parts	Q'ty	Parts No.	Assembly No.
e-1	Face Plate	1	146706-0-01	
e-2	Differential Feed Indicator	1	146742-0-01	
e-3	Label	1		
e-4	Needle Clamp 2.2	1		
e-5	Screw	2	146427-0-01	146773-0-01
e-6	Needle Cat. No. 6120 #14	2	151200-0-14	
e-7	Screw	1	100080-0-04	
e-8	Washer	1	025030-1-32	
e-9	Presser Foot Hinge Spring	1	146887-0-01	
e-10	Chaining-off Finger	1		
e-11	Screw	1	100105-0-05	
e-12	Presser Foot (Rear)	1	145774-0-01	
e-13	Presser Foot	1		
e-14	Throat Plate	1		
e-15	Spacer	1	146787-0-01	
e-16	Screw	2	105216-0-01	
e-17	Main Feed (Back) Dog	1	146745-0-01	
e-18	Differential Feed (Front) Dog	1	146750-0-01	
e-19	Chain Feed Dog	1	146578-0-01	
e-20	Needle Guard F	1	146777-0-01	
e-21	Main Feed Shaft	1	144068-0-01	
e-22	Screw	2	014680-4-22	146611-1-01

Ref. No.	Name of Parts	Q'ty	Parts No.	Assembly No.
e-23	Set Collar	1		
e-24	Looper (Right Hand) Holder Guide Base	1		
e-25	Looper (Right Hand) Holder Guide Block	1		
e-26	Looper (Right Hand) Holder Supporting Plate	1		
e-27	Taper Pin	2		
e-28	Screw	2	009681-0-12	146611-1-01
e-29	Screw	1	149170-0-01	
e-30	Looper (Right Hand) Driving Lever	1		
e-31	Screw	1	148294-0-01	
e-32	Wick	1	130116-0-00	
e-33	Looper (Right Hand) Holding Shaft	1		
e-34	Looper (Right Hand) Holder	1		
e-35	Screw	1	014680-4-22	147937-0-01
e-36	Looper (Right Hand)	1		
e-37	Front Cover	1		
e-38	Spring	1	146442-0-01	
e-39	Front Cover Hinge	1	146440-0-01	148993-0-01
e-40	Front Cover Hinge Pin	1	146441-0-00	
e-41	Pin	1	047140-8-42	
e-42	Hinge Cover	1	148984-0-01	
e-43	Spring	2	144104-0-01	
e-44	Needle Thread Guide Plate	1	110813-0-01	

(NOTE! PREFIX ALL NUMBERS BY 'BR'.
EXAMPLE BR146222-0-01)

e'. 832U028-◌ Needle Gauge 2.2 mm (Bulky Knit Work)

This machine is the same as the 831U001-◌ (A~H) with exceptions of 832U Common Parts (Page 20, a) and Parts shown below :

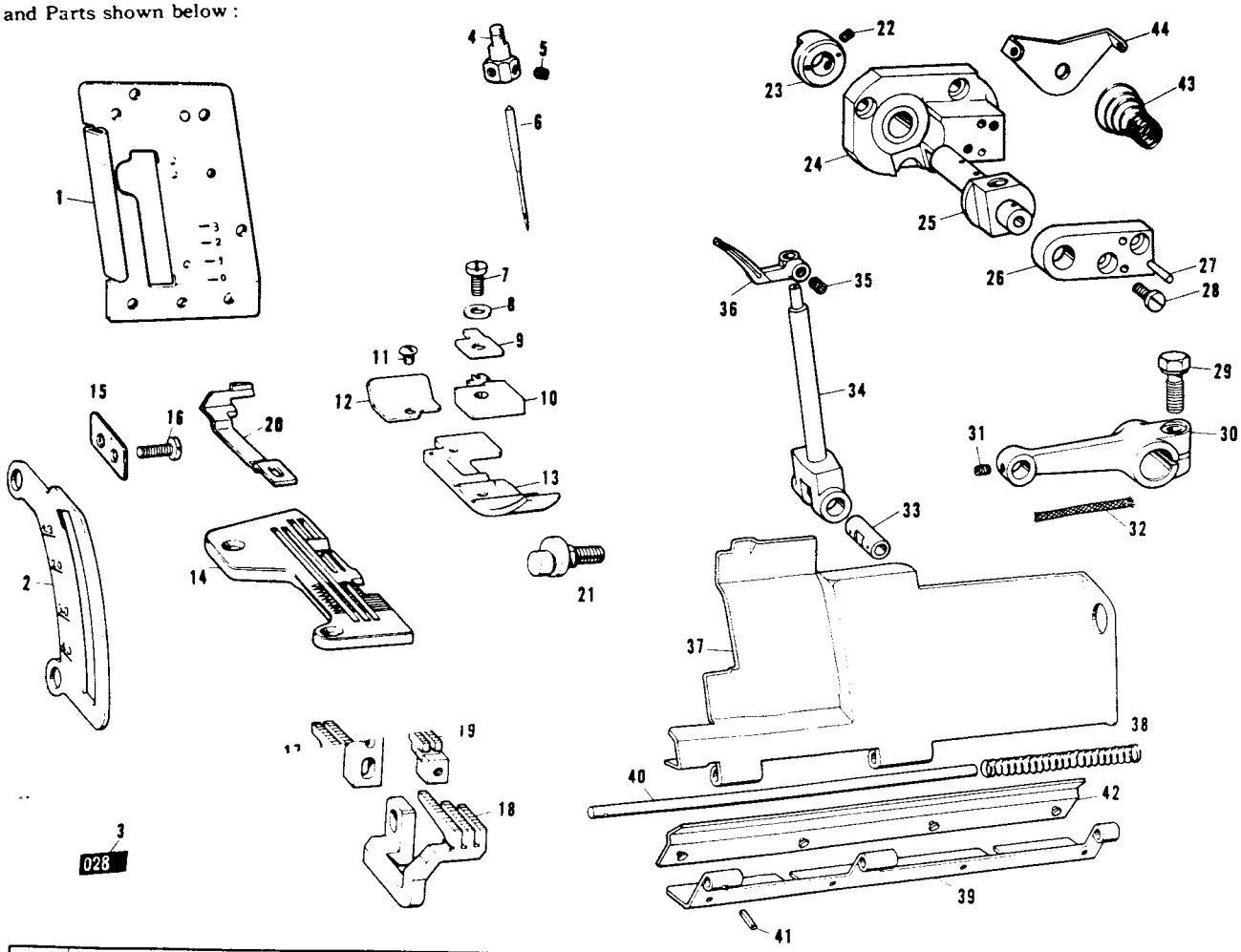

Ref. No.	Name of Parts	Q'ty	Parts No.	Assembly No.
e'-1	Face Plate	1	146706-0-01	
e'-2	Differential Feed Indicator	1	146742-0-01	
e'-3	Label	1		
e'-4	Needle Clamp 2.2	1		
e'-5	Screw	2	146427-0-01	146773-0-01
e'-6	Needle Cat. No. 6120 #14	2	151200-0-14	
e'-7	Screw	1	100080-0-04	
e'-8	Washer	1	025030-1-32	
e'-9	Presser Foot Hinge Spring	1	146887-0-01	
e'-10	Chaining-off Finger	1		
e'-11	Screw	1	100105-0-05	
e'-12	Presser Foot (Rear)	1	145774-0-01	
e'-13	Presser Foot	1		
e'-14	Throat Plate	1		
e'-15	Spacer	1	146787-0-01	
e'-16	Screw	2	105216-0-01	
e'-17	Main Feed (Back) Dog	1	146745-0-01	
e'-18	Differential Feed (Front) Dog	1	146750-0-01	
e'-19	Chain Feed Dog	1	146578-0-01	
e'-20	Needle Guard F	1	146777-0-01	
e'-21	Main Feed Shaft	1	144068-0-01	
e'-22	Screw	2	014680-4-22	146611-1-01

Ref. No.	Name of Parts	Q'ty	Parts No.	Assembly No.
e'-23	Set Collar	1		
e'-24	Looper (Right Hand) Holder Guide Base	1		
e'-25	Looper (Right Hand) Holder Guide Block	1		
e'-26	Looper (Right Hand) Holder Supporting Plate	1		
e'-27	Taper Pin	2		
e'-28	Screw	2	009681-0-12	146611-1-01
e'-29	Screw	1	149170-0-01	
e'-30	Looper (Right Hand) Driving Lever	1		
e'-31	Screw	1	148294-0-01	
e'-32	Wick	1	140416-0-00	
e'-33	Looper (Right Hand) Holding Shaft	1		
e'-34	Looper (Right Hand) Holder	1		
e'-35	Screw	1	014680-4-22	
e'-36	Looper (Right Hand)	1		147936-0-01
e'-37	Front Cover	1		
e'-38	Spring	1	146442-0-01	
e'-39	Front Cover Hinge	1	146440-0-01	
e'-40	Front Cover Hinge Pin	1	146441-0-00	148993-0-01
e'-41	Pin	1	047140-8-42	
e'-42	Hinge Cover	1	148984-0-01	
e'-43	Spring	2	144104-0-01	
e'-44	Needle Thread Guide Plate	1	110813-0-01	

[NOTE! PREFIX ALL NUMBERS BY 'BR'.
EXAMPLE BR146222-0-01]

f. 832U031-◯ Needle Gauge 3 mm (Extra Heavy Work)

This machine is the same as the 831U001-◯ (A~H) with exceptions of 832U Common Parts (Page 20, a) and Parts shown below :

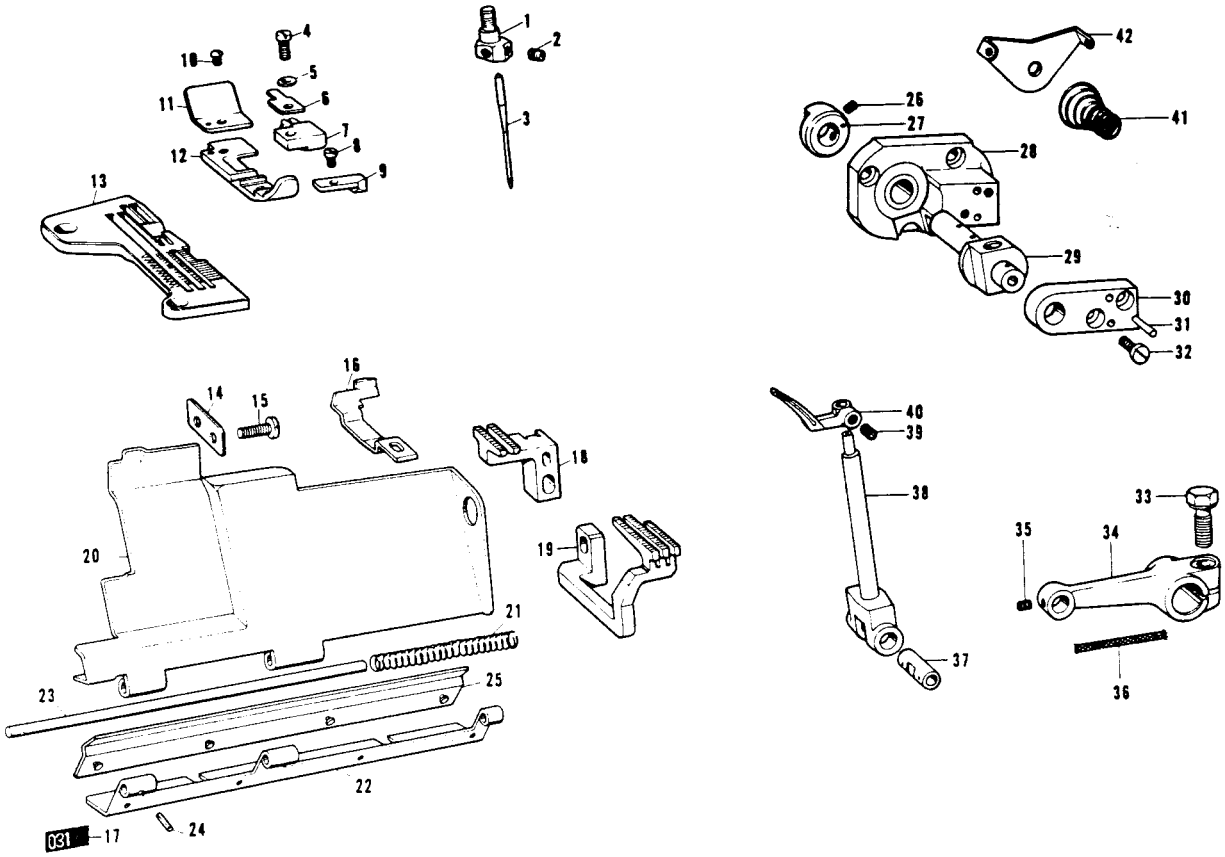

Ref. No.	Name of Parts	Q'ty	Parts No.	Assembly No.
f-1	Needle Clamp 3	1		146775-0-01
f-2	Screw	2	146427-0-01	
f-3	Needle Cat. No. 6122 #21	2	152186-0-21	
f-4	Screw	1	100080-0-04	146965-0-01
f-5	Washer	1	025030-1-32	
f-6	Presser Foot Hinge Spring	1	146887-0-01	
f-7	Chaining-off Finger	1	146966-0-01	
f-8	Screw	1	009639-3-12	
f-9	Presser Foot (Front)	1	146888-0-01	
f-10	Screw	1	100105-0-05	
f-11	Presser Foot (Rear)	1	146889-0-01	
f-12	Presser Foot	1		
f-13	Throat Plate	1		
f-14	Spacer	1	146788-0-01	
f-15	Screw	2	105216-0-01	
f-16	Needle Guard F	1	146778-0-01	
f-17	Label	1		
f-18	Main Feed (Back) Dog	1	146790-0-01	
f-19	Differential Feed (Front) Dog	1	146791-0-01	
f-20	Front Cover	1		148995-0-01
f-21	Spring	1	146442-0-01	

Ref. No.	Name of Parts	Q'ty	Parts No.	Assembly No.
f-22	Front Cover Hinge	1	146440-0-01	148995-0-01
f-23	Front Cover Hinge Pin	1	146441-0-00	
f-24	Pin	1	047140-8-42	
f-25	Hinge Cover	1	148984-0-01	
f-26	Screw	2	014680-4-22	146611-1-01
f-27	Set Collar	1		
f-28	Looper (Right Hand) Holder Guide Base	1		
f-29	Looper (Right Hand) Holder Guide Block	1		
f-30	Looper (Right Hand) Holder Supporting Plate	1		
f-31	Taper Pin	2		
f-32	Screw	2	009681-0-12	
f-33	Screw	1	149170-0-01	
f-34	Looper (Right Hand) Driving Lever	1		
f-35	Screw	1	148294-0-01	
f-36	Wick	1	140416-0-00	
f-37	Looper (Right Hand) Holding Shaft	1		
f-38	Looper (Right Hand) Holder	1		
f-39	Screw	1	014680-4-22	147937-0-01
f-40	Looper (Right Hand)	1		
f-41	Spring	2	144104-0-01	
f-42	Needle Thread Guide Plate	1	110813-0-01	

[NOTE! PREFIX ALL NUMBERS BY 'BR'.
EXAMPLE BR146222-0-01]

f'. 832U032-◯ Needle Gauge 3 mm (Extra Heavy Work)

This machine is the same as the 831U001-◯ (A ~ H) with exceptions of 832U Common Parts (Page 20, a) and Parts shown below :

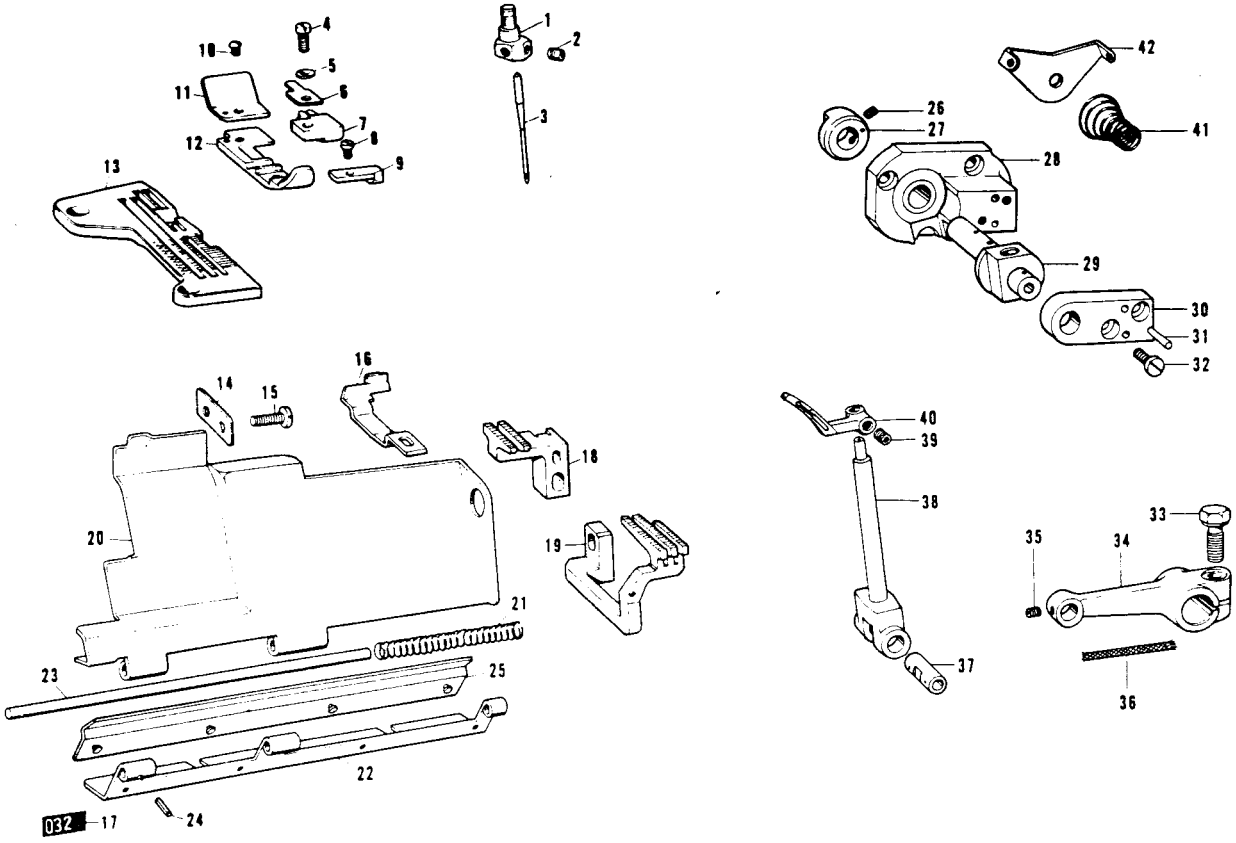

Ref No.	Name of Parts	Q'ty	Parts No.	Assembly No.
f'-1	Needle Clamp 3	1		146775-0-01
f'-2	Screw	2	146427-0-01	
f'-3	Needle Cat. No. 6122 #21	2	152186-0-21	
f'-4	Screw	1	100080-0-04	146965-0-01
f'-5	Washer	1	025030-1-32	
f'-6	Presser Foot Hinge Spring	1	146887-0-01	
f'-7	Chaining-off Finger	1	146966-0-01	
f'-8	Screw	1	009639-3-12	
f'-9	Presser Foot (Front)	1	146888-0-01	
f'-10	Screw	1	100105-0-05	
f'-11	Presser Foot (Rear)	1	146889-0-01	
f'-12	Presser Foot	1		
f'-13	Throat Plate	1		
f'-14	Spacer	1	146788-0-01	
f'-15	Screw	2	105216-0-01	
f'-16	Needle Guard F	1	146778-0-01	
f'-17	Label	1		
f'-18	Main Feed (Back) Dog	1	146790-0-01	
f'-19	Differential Feed (Front) Dog	1	146791-0-01	
f'-20	Front Cover	1		148995-0-01
f'-21	Spring	1	146442-0-01	

Ref No.	Name of Parts	Q'ty	Parts No.	Assembly No.
f'-22	Front Cover Hinge	1	146440-0-01	148995-0-01
f'-23	Front Cover Hinge Pin	1	146441-0-00	
f'-24	Pin	1	047140-8-42	
f'-25	Hinge Cover	1	148984-0-01	
f'-26	Screw	2	014680-4-22	146611-1-01
f'-27	Set Collar	1		
f'-28	Looper (Right Hand) Holder Guide Base	1		
f'-29	Looper (Right Hand) Holder Guide Block	1		
f'-30	Looper (Right Hand) Holder Supporting Plate	1		
f'-31	Taper Pin	2		
f'-32	Screw	2	009681-0-12	
f'-33	Screw	1	149170-0-01	
f'-34	Looper (Right Hand) Driving Lever	1		
f'-35	Screw	1	148294-0-01	
f'-36	Wick	1	140416-0-00	
f'-37	Looper (Right Hand) Holding Shaft	1		
f'-38	Looper (Right Hand) Holder	1		
f'-39	Screw	1	014680-4-22	147936-0-01
f'-40	Looper (Right Hand)	1		
f'-41	Spring	2	144104-0-01	
f'-42	Needle Thread Guide Plate	1	110813-0-01	

NOTE! PREFIX ALL NUMBERS BY 'BR'.
EXAMPLE BR146222-0-01

g. 832U033-◌ Needle Gauge 2.2 mm (Ruffling)

This machine is the same as the 831U001-◌ (A ~ H) with exceptions of 832U Common Parts (Page 20, a) and Parts shown below :

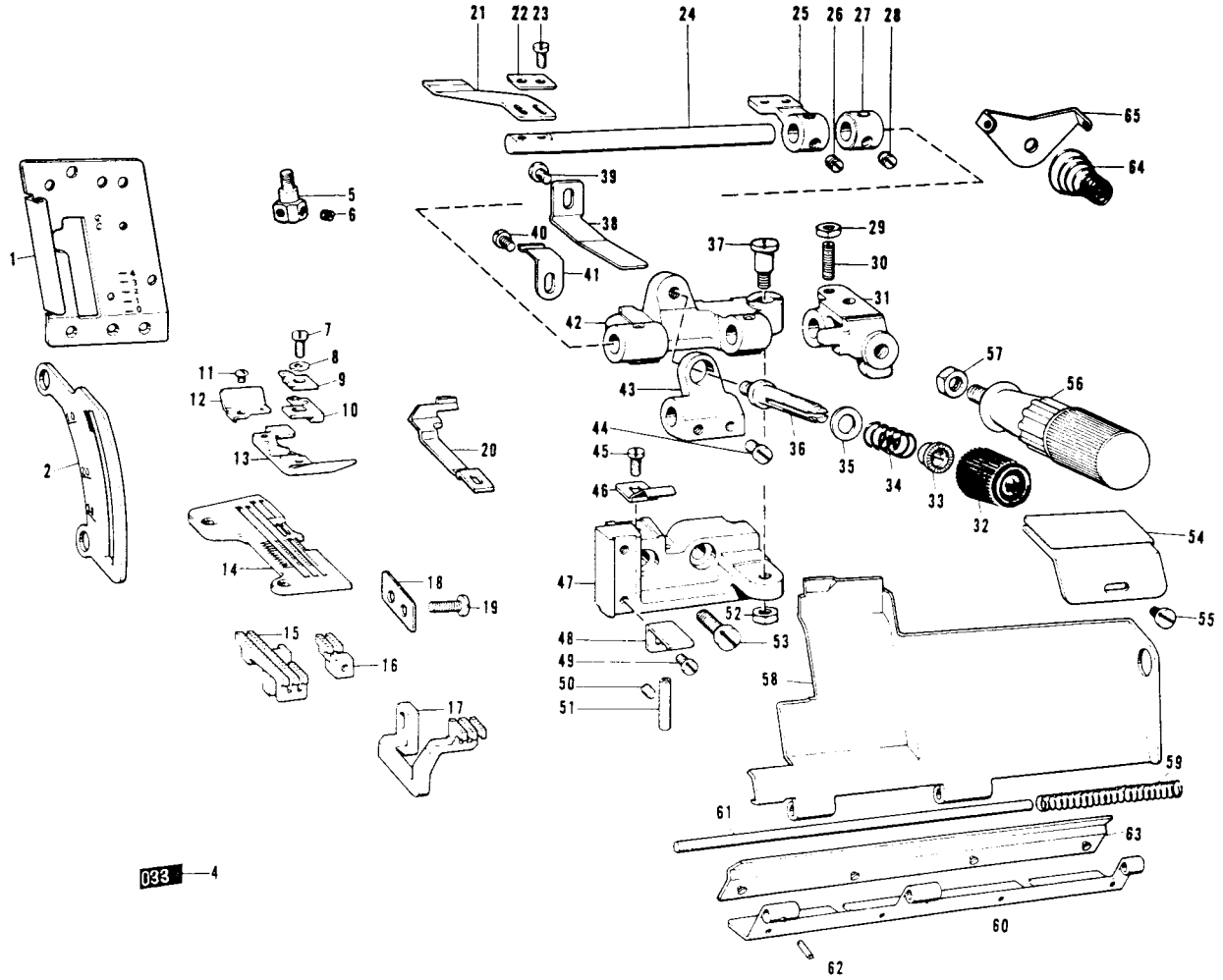

Ref. No.	Name of Parts	Q'ty	Parts No.	Assembly No.
g-1	Face Plate	1	146430-0-01	
g-2	Differential Feed Indicator	1	146562-0-01	
g-4	Label	1	[redacted]	
g-5	Needle Clamp 2.2	1		146773-0-01
g-6	Screw	1	146427-0-01	
g-7	Screw	1	100080-0-04	
g-8	Washer	1	025030-3-32	
g-9	Presser Foot Plate	1	144091-0-01	
g-10	Chaining-off Finger	1	144816-0-01	144815-0-01
g-11	Screw	1	100105-0-05	
g-12	Presser Foot Chain Shield	1	144100-0-01	
g-13	Presser Foot U	1		
g-14	Throat Plate	1	[redacted]	
g-15	Main Feed (Back) Dog	1	146746-0-01	
g-16	Chain Feed Dog	1	146578-0-01	
g-17	Differential Feed (Front) Dog	1	146751-0-01	
g-18	Spacer	1	146787-0-01	
g-19	Screw	2	105216-0-01	
g-20	Needle Guard F	1	146777-0-01	
g-21	Ruffling Blade	1	144783-0-01	
g-22	Washer	1	144784-0-01	
g-23	Screw	2	009660-5-12	
g-24	Ruffling Blade Base Shaft	1	145803-0-01	
g-25	Binder Base	1		146587-0-02
g-26	Screw	2	101706-0-01	
g-27	Set Collar	1		
g-28	Screw	2	101706-0-01	181995-0-02
g-29	Nut	1	105234-0-03	
g-30	Screw	1	110230-0-01	
g-31	Handle Fixing Plate	1		
g-32	Thread Tension Adjusting Nut	1	149566-0-02	
g-33	Washer	1	144105-0-00	

Ref. No.	Name of Parts	Q'ty	Parts No.	Assembly No.
g-34	Spring	1	144788-0-01	
g-35	Washer	1	025770-2-32	
g-36	Looper Thread Tension Control Stud	1	110820-0-01	
g-37	Screw	1	147933-0-01	
g-38	Spring	1	145811-0-01	
g-39	Screw	1	009680-6-12	
g-40	Screw	1	001670-5-12	
g-41	Spring	1	144764-0-01	
g-42	Bracket for Ruffling Blade	1		
g-43	Spring Base	1		146587-0-02
g-44	Screw	2	105163-0-01	
g-45	Screw	1	009680-6-12	
g-46	Spring	1	145808-0-01	
g-47	Ruffler Base	1		
g-48	Ruffling Blade Guide	2	145807-0-01	
g-49	Screw	2	009680-8-12	
g-50	Screw	1	013679-4-12	
g-51	Thread Guide Pipe	1	146592-0-01	
g-52	Nut	1	150553-0-02	
g-53	Screw	2	009781-8-12	
g-54	Ruffler Guide	1	144793-0-00	
g-55	Screw	1	112751-0-02	
g-56	Handle	1	145809-0-01	
g-57	Nut	1	150556-0-02	
g-58	Front Cover	1		
g-59	Spring	1	146442-0-01	
g-60	Front Cover Hinge	1	146440-0-01	146763-0-01
g-61	Front Cover Hinge Pin	1	146441-0-00	
g-62	Pin	1	047140-8-42	
g-63	Hinge Cover	1	148984-0-01	
g-64	Spring	2	144104-0-01	
g-65	Needle Thread Guide Plate	1	110813-0-01	

NOTE! PREFIX ALL NUMBERS BY 'BR'.
EXAMPLE BR146222-0-01

g. 832U034-[ ] Needle Gauge 2.2 mm (Ruffling)

This machine is the same as the 831U001- (A ~ H) with exceptions of 832U Common Parts (Page 20, a) and Parts shown below :

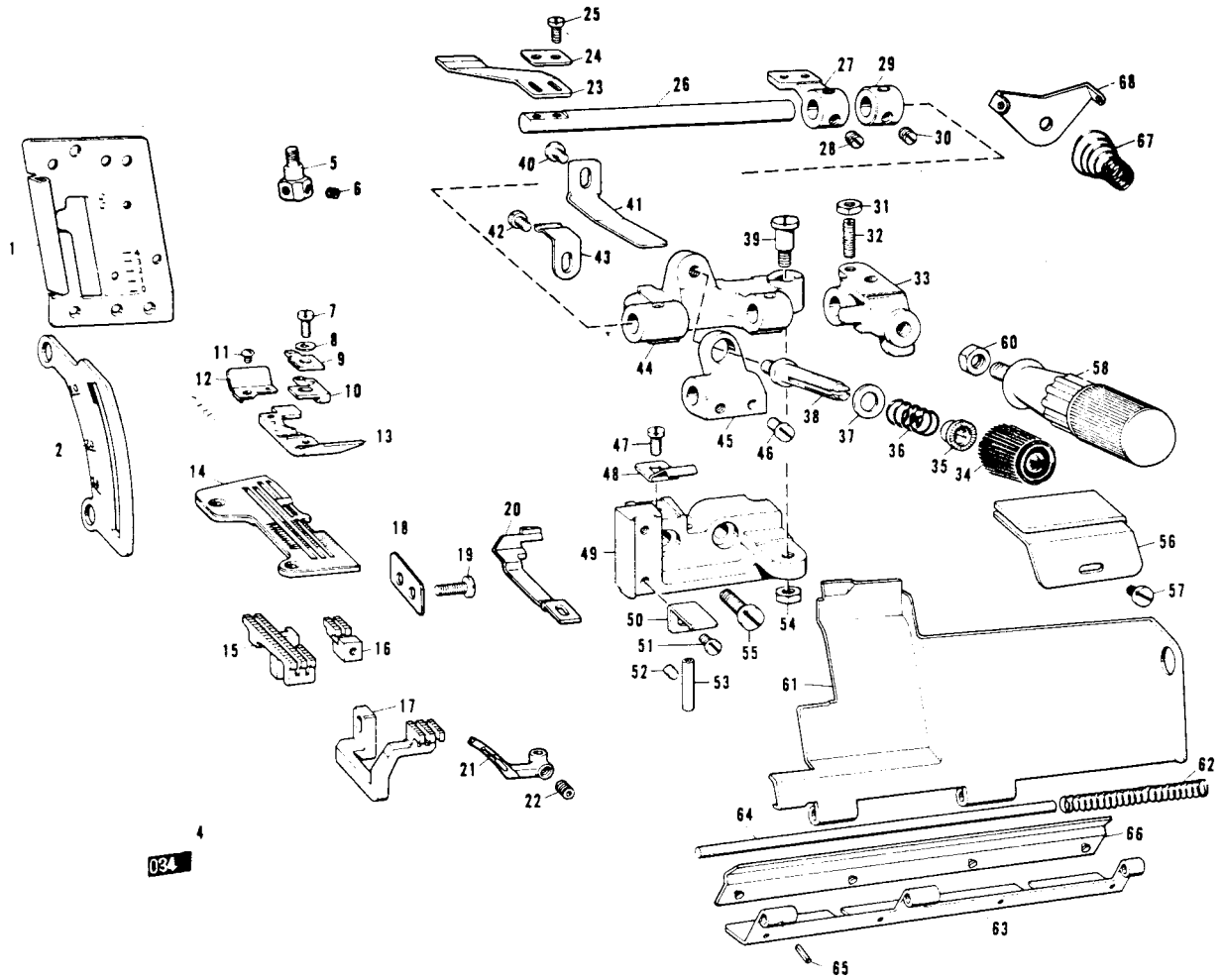

Ref. No.	Name of Parts	Q'ty	Parts No.	Assembly No.
g-1	Face Plate	1	146430-0-01	
g-2	Differential Feed Indicator	1	146562-0-01	
g-3	Label	1	[redacted]	
g-5	Needle Clamp 2.2	1		146773-0-01
g-6	Screw	1	146427-0-01	
g-7	Screw	1	100080-0-04	144815-0-01
g-8	Washer	1	025030-1-32	
g-9	Presser Foot Hinge Spring	1	144091-0-01	
g-10	Chaining-off Finger	1	144816-0-01	
g-11	Screw	1	100105-0-05	
g-12	Presser Foot Chain Shield	1	144100-0-01	
g-13	Presser Foot L	1		
g-14	Throat Plate	1	[redacted]	
g-15	Main Feed (Back) Dog	1	146746-0-01	
g-16	Chain Feed Dog	1	146578-0-01	
g-17	Differential Feed (Front) Dog	1	146751-0-01	
g-18	Spacer	1	146787-0-01	
g-19	Screw	2	105216-0-01	
g-20	Needle Guard F	1	146777-0-01	
g-21	Looper (Right Hand)	1		147936-0-01
g-22	Screw	1	014680-4-22	
g-23	Ruffling Blade	1	144783-0-01	
g-24	Washer	1	144784-0-01	
g-25	Screw	2	009660-7-12	
g-26	Ruffling Blade Base Shaft	1	145803-0-01	
g-27	Binder Base	1		146587-0-02
g-28	Screw	2	101706-0-01	
g-29	Set Collar	1		
g-30	Screw	2	101706-0-01	181995-0-02
g-31	Nut	1	105234-0-03	
g-32	Screw	1	110230-0-01	
g-33	Handle Fixing Plate	1		
g-34	Thread Tension Adjusting Nut	1	149566-0-02	

Ref. No.	Name of Parts	Q'ty	Parts No.	Assembly No.
g-35	Washer	1	144105-0-00	
g-36	Spring	1	144788-0-01	
g-37	Washer	1	025770-2-32	
g-38	Looper Thread Tension Control Stud	1	110820-0-01	
g-39	Screw	1	147933-0-01	
g-41	Spring	1	145811-0-01	
g-40	Screw	1	009680-6-12	
g-42	Screw	1	001670-5-12	
g-43	Spring	1	144764-0-01	
g-44	Bracket for Ruffling Blade	1		146587-0-02
g-45	Spring Base	1		
g-46	Screw	2	105163-0-01	
g-47	Screw	1	009680-6-12	
g-48	Spring	1	145808-0-01	
g-49	Ruffler Base	1		
g-50	Ruffling Blade Guide	2	145807-0-01	
g-51	Screw	2	009680-8-12	
g-52	Screw	1	013679-4-12	
g-53	Thread Guide Pipe	1	146592-0-01	
g-54	Nut	1	150553-0-01	
g-55	Screw	2	009781-8-12	
g-56	Ruffler Guide	1	144793-0-00	
g-57	Screw	1	112751-0-02	
g-58	Handle	1	145809-0-01	
g-60	Nut	1	150556-0-02	
g-61	Front Cover	1		
g-62	Spring	1	146442-0-01	
g-63	Front Cover Hinge	1	146440-0-01	
g-64	Front Cover Hinge Pin	1	146441-0-00	146763-0-01
g-65	Pin	1	047140-8-42	
g-66	Hinge Cover	1	148984-0-01	
g-67	Spring	2	144104-0-01	
g-68	Needle Thread Guide Plate	1	110813-0-01	

NOTE! PREFIX ALL NUMBERS BY 'BR'.
EXAMPLE BR146222-0-01

h. 832U037-◌ Needle Gauge 2.2 mm (Ruffling (W/Piping))

This machine is the same as the 831U001-◌ (A ~ H) with exceptions of 832U Common Parts (Page 20, a) and Parts shown below :

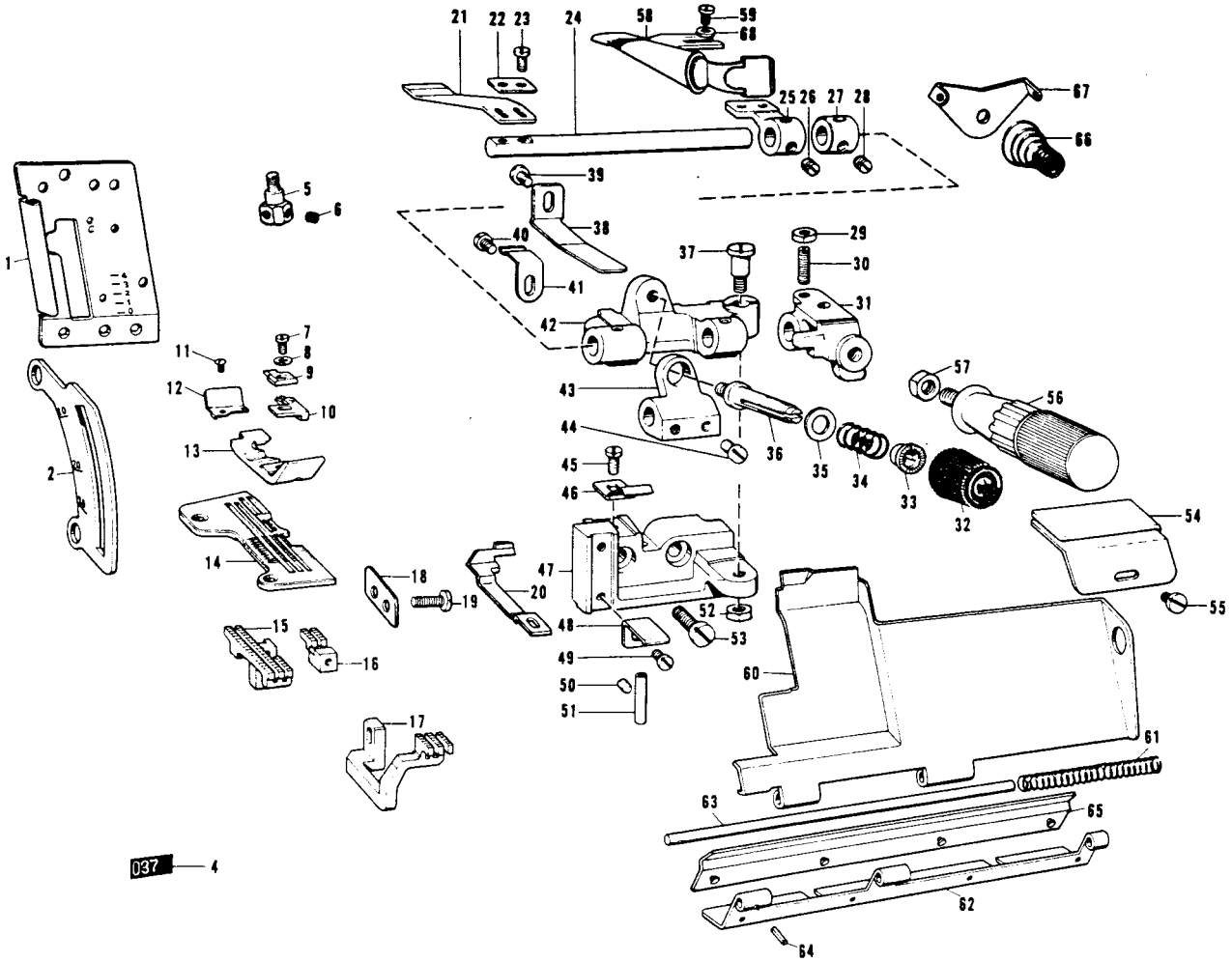

Ref. No.	Name of Parts	Q'ty	Parts No.	Assembly No.
h- 1	Face Plate	1	146430-0-01	
h- 2	Differential Feed Indicator	1	146562-0-01	
h- 4	Label	1		
h- 5	Needle Clamp 2.2	1		146773-0-01
h- 6	Screw	2	146427-0-01	
h- 7	Screw	1	100080-0-04	
h- 8	Washer	1	025030-1-32	
h- 9	Presser Foot Plate	1	144091-0-01	
h-10	Chaining-off Finger	1	144816-0-01	147439-0-01
h-11	Screw	1	100105-0-05	
h-12	Presser Foot Chain Shield	1	144100-0-01	
h-13	Presser Foot	1		
h-14	Throat Plate	1		
h-15	Main Feed (Back) Dog	1	147828-0-01	
h-16	Chain Feed Dog	1	147832-0-01	
h-17	Differential Feed (Front) Dog	1	146751-0-01	
h-18	Spacer	1	146787-0-01	
h-19	Screw	2	105216-0-01	
h-20	Needle Guard F	1	146777-0-01	
h-21	Ruffling Blade	1	144783-0-01	
h-22	Washer	1	144784-0-01	
h-23	Screw	2	009660-7-12	
h-24	Ruffling Blade Base Shaft	1	145803-0-01	146587-0-02
h-25	Binder Base	1		
h-26	Screw	2	101706-0-01	
h-27	Set Collar	1		181995-0-02
h-28	Screw	2	101706-0-01	
h-29	Nut	1	105234-0-03	
h-30	Screw	1	110230-0-01	
h-31	Handle Fixing Plate	1		
h-32	Thread Tension Adjusting Nut	1	149566-0-02	
h-33	Washer	1	144105-0-00	
h-34	Spring	1	144788-0-01	

Ref. No.	Name of Parts	Q'ty	Parts No.	Assembly No.
h-35	Washer	1	025770-0-01	
h-36	Looper Thread Tension Control Stud	1	110820-0-01	
h-37	Screw	1	147933-0-01	
h-38	Spring	1	145811-0-01	
h-39	Screw	1	009680-6-12	
h-40	Screw	1	001670-5-12	
h-41	Spring	1	144764-0-01	
h-42	Bracket for Ruffling Blade	1		
h-43	Spring Base	1		146587-0-02
h-44	Screw	2	105163-0-01	
h-45	Screw	1	009680-6-12	
h-46	Spring	1	145808-0-01	
h-47	Ruffler Base	1		
h-48	Ruffling Blade Guide	2	145807-0-01	
h-49	Screw	2	009680-8-12	
h-50	Screw	1	013679-4-12	
h-51	Thread Guide Pipe	1	146592-0-01	
h-52	Nut	1	150553-0-02	
h-53	Screw	2	009781-8-12	
h-54	Ruffler Guide	1	144793-0-00	
h-55	Screw	1	112751-0-02	
h-56	Handle	1	145809-0-01	
h-57	Nut	1	150556-0-02	
h-58	Binder	1	147440-0-00	
h-59	Screw	2	009680-6-12	
h-60	Front Cover	1		
h-61	Spring	1	146442-0-01	
h-62	Front Cover Hinge	1	146440-0-01	146763-0-01
h-63	Front Cover Hinge Pin	1	146441-0-00	
h-64	Pin	1	047140-8-42	
h-65	Hinge Cover	1	148984-0-01	
h-66	Spring	2	144104-0-01	
h-67	Needle Thread Guide Plate	1	110813-0-01	
h-68	Washer	2	110735-0-02	

NOTE! PREFIX ALL NUMBERS BY 'BR'.
EXAMPLE BR146222-0-01

h'. 832U038-◌ Needle Gauge 2.2 mm (Ruffling (W/Piping))

This machine is the same as the 831U001-◌ (A~H) with exceptions of 832U Common Parts (Page 20, a) and Parts shown below :

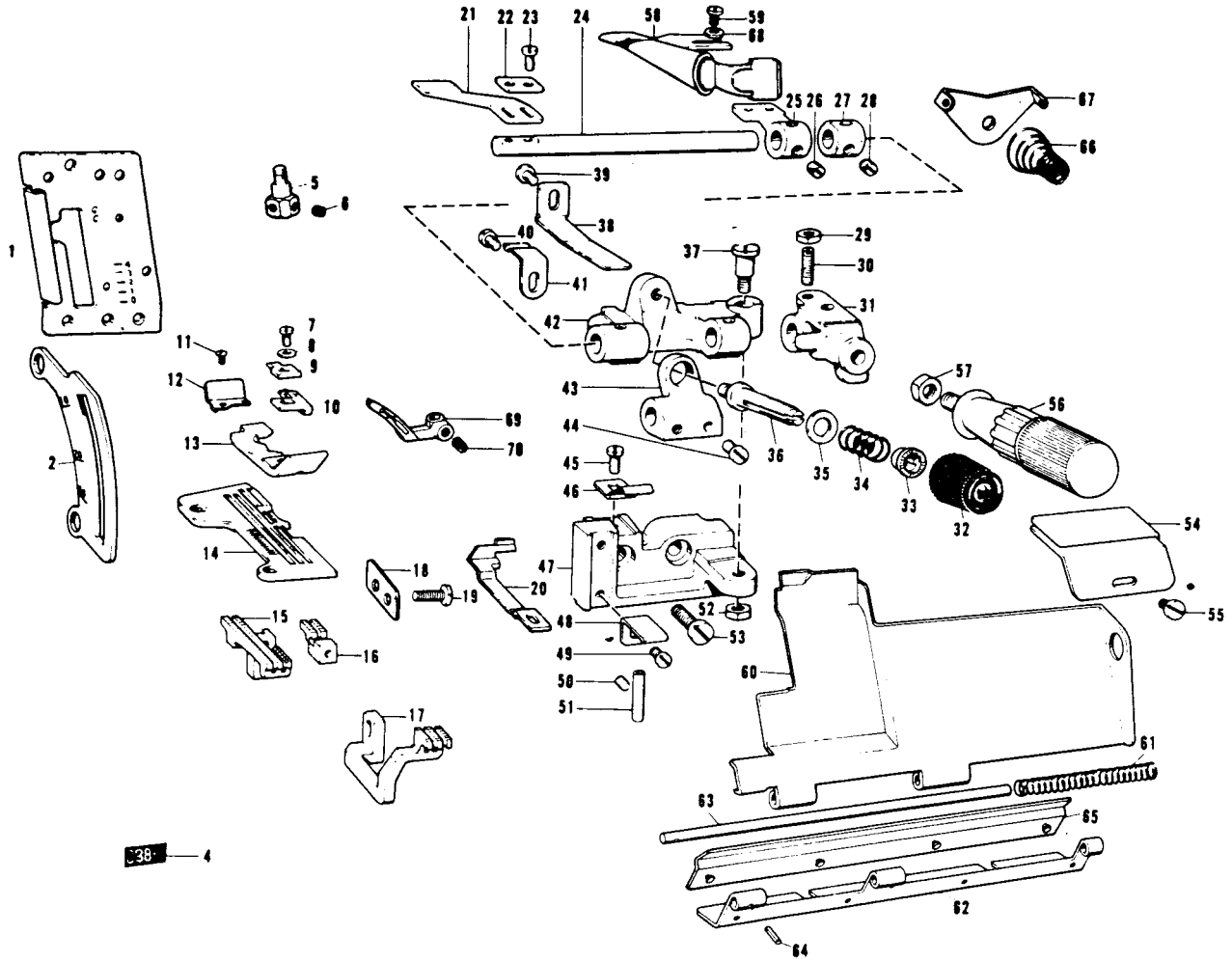

Ref. No.	Name of Parts	Q'ty	Parts No.	Assembly No.
h'- 1	Face Plate	1	146430-0-01	
h'- 2	Differential Feed Indicator	1	146562-0-01	
h'- 4	Label	1		
h'- 5	Needle Clamp 2.2	1		146773-0-01
h'- 6	Screw	2	146427-0-01	
h'- 7	Screw	1	100080-0-04	
h'- 8	Washer	1	025030-1-32	
h'- 9	Presser Foot Plate	1	144091-0-01	
h'-10	Chaining-off Finger	1	144816-0-01	147439-0-01
h'-11	Screw	1	100105-0-05	
h'-12	Presser Foot Chain Shield	1	144100-0-01	
h'-13	Presser Foot	1		
h'-14	Throat Plate	1		
h'-15	Main Feed (Back) Dog	1	147828-0-01	
h'-16	Chain Feed Dog	1	147832-0-01	
h'-17	Differential Feed (Front) Dog	1	146751-0-01	
h'-18	Spacer	1	146787-0-01	
h'-19	Screw	2	105216-0-01	
h'-20	Needle Guard F	1	146777-0-01	
h'-21	Ruffling Blade	1	144783-0-01	
h'-22	Washer	1	144784-0-01	
h'-23	Screw	2	009660-7-12	146587-0-02
h'-24	Ruffling Blade Base Shaft	1	145803-0-01	
h'-25	Binder Base	1		
h'-26	Screw	2	101706-0-01	
h'-27	Set Collar	1		181995-0-02
h'-28	Screw	2	101706-0-01	
h'-29	Nut	1	105234-0-03	
h'-30	Screw	1	110230-0-01	
h'-31	Handle Fixing Plate	1		
h'-32	Thread Tension Adjusting Nut	1	149566-0-02	
h'-33	Washer	1	144105-0-00	
h'-34	Spring	1	144788-0-01	
h'-35	Washer	1	025770-2-32	

Ref. No.	Name of Parts	Q'ty	Parts No.	Assembly No.
h'-36	Looper Thread Tension Control Stud	1	110820-0-01	
h'-37	Screw	1	147933-0-01	
h'-38	Spring	1	145811-0-01	
h'-39	Screw	1	009680-6-12	
h'-40	Screw	1	001670-5-12	
h'-41	Spring	1	144764-0-01	
h'-42	Bracket for Ruffling Blade	1		
h'-43	Spring Base	1		
h'-44	Screw	2	105163-0-01	146587-0-02
h'-45	Screw	1	009680-6-12	
h'-46	Spring	1	145808-0-01	
h'-47	Ruffler Base	1		
h'-48	Ruffling Blade Guide	2	145807-0-01	
h'-49	Screw	2	009680-8-12	
h'-50	Screw	1	013679-4-12	
h'-51	Thread Guide Pipe	1	146592-0-01	
h'-52	Nut	1	150553-0-02	
h'-53	Screw	2	009781-8-12	
h'-54	Ruffler Guide	1	144793-0-00	
h'-55	Screw	1	112751-0-02	
h'-56	Handle	1	145809-0-01	
h'-57	Nut	1	150556-0-02	
h'-58	Binder	1	147440-0-00	
h'-59	Screw	2	009680-6-12	
h'-60	Front Cover	1		
h'-61	Spring	1	146442-0-01	
h'-62	Front Cover Hinge	1	146440-0-01	146763-0-01
h'-63	Front Cover Hinge Pin	1	146441-0-00	
h'-64	Pin	1	047140-8-42	
h'-65	Hinge Cover	1	148984-0-01	
h'-66	Spring	2	144104-0-01	
h'-67	Needle Thread Guide Plate	1	110813-0-01	
h'-68	Washer	2	110735-0-02	
h'-69	Looper (Right Hand)	1		147936-0-01
h'-70	Screw	2	014680-4-22	

NOTE! PREFIX ALL NUMBERS BY 'BR'.
EXAMPLE BR146222-0-01

j. 832U041-◌ Needle Gauge 2.2 mm (Taping on Light, Medium Work)

This machine is the same as the 831U001-◌ (A ~ H) with exceptions of 832U Common Parts (Page 20, a) and Parts shown below :

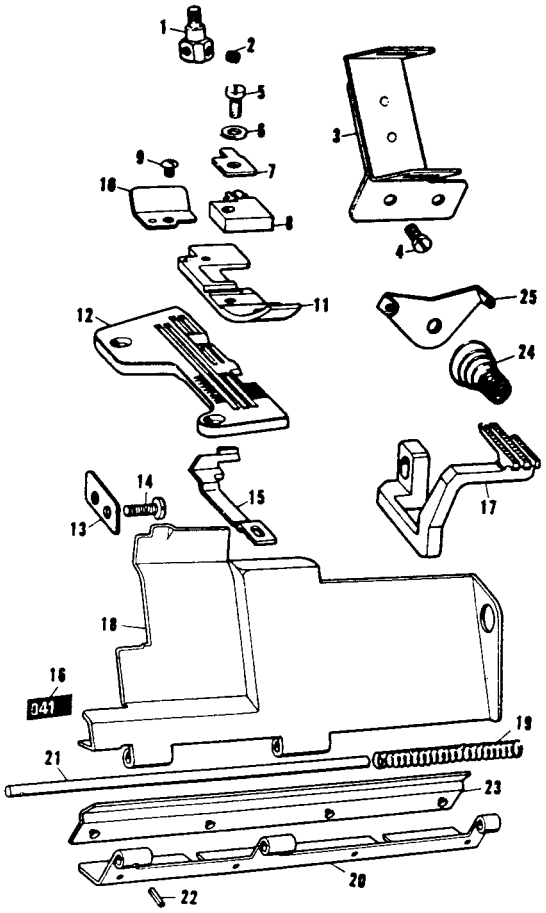

Ref. No.	Name of Parts	Q'ty	Parts No.	Assembly No.	Ref. No.	Name of Parts	Q'ty	Parts No.	Assembly No.
j- 1	Needle Clamp 2.2	1		146773-0-01	j-14	Screw	2	105216-0-01	
j- 2	Screw	2	146427-0-01		j-15	Needle Guard F	1	146777-0-01	
j- 3	Tape Guide	1	146883-0-01		j-16	Label	1		
j- 4	Screw	2	009669-4-12		j-17	Differential Feed (Front) Dog	1	146749-0-01	
j- 5	Screw	1	100080-0-04	146906-0-01	j-18	Front Cover	1		148993-0-01
j- 6	Washer	1	025030-1-32		j-19	Spring	1	146442-0-01	
j- 7	Presser Foot Hinge Spring	1	146887-0-01		j-20	Front Cover Hinge	1	146440-0-01	
j- 8	Chaining-off Finger	1	146907-0-01		j-21	Front Cover Hinge Pin	1	146441-0-00	
j- 9	Screw	1	100105-0-05		j-22	Pin	1	047140-8-42	
j-10	Presser Foot (Rear)	1	145774-0-01		j-23	Hinge Cover	1	148984-0-01	
j-11	Presser Foot	1			j-24	Spring	2	144104-0-01	
j-12	Throat Plate	1			j-25	Needle Thread Guide Plate	1	110813-0-01	
j-13	Spacer	1	146787-0-01						

NOTE! PREFIX ALL NUMBERS BY 'BR'.
EXAMPLE BR146222-0-01

k. 832U045-◯ Needle Gauge 2.2 mm (Taping on Bulky Knit Work)

This machine is the same as the 831U001-◯ (A~H) with exceptions of 832U Common Parts (Page 20, a) and Parts shown below :

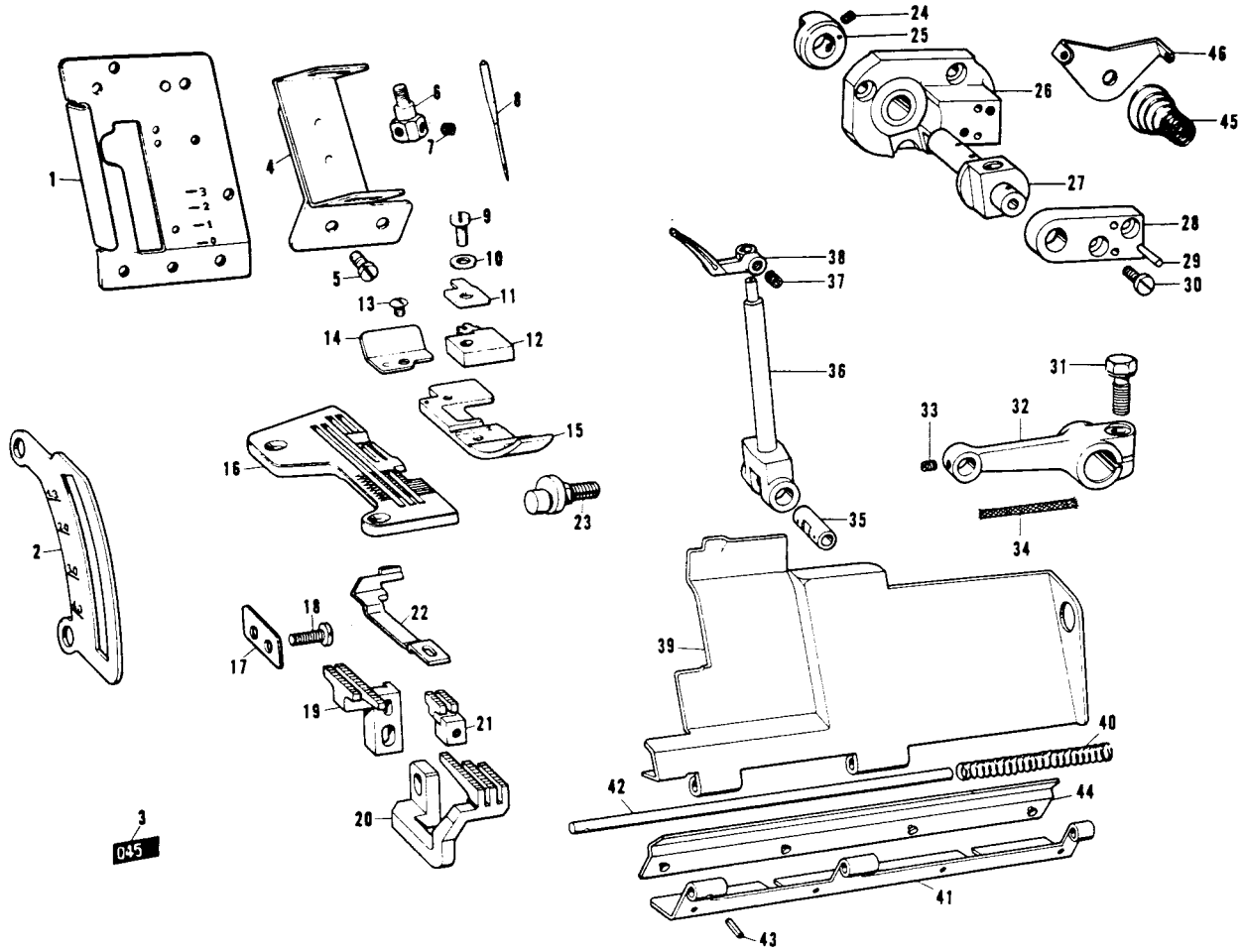

Ref. No.	Name of Parts	Q'ty	Parts No.	Assembly No.
k- 1	Face Plate	1	146706-0-01	
k- 2	Differential Feed Indicator	1	146742-0-01	
k- 3	Label	1		
k- 4	Tape Guide	1	146883-0-01	
k- 5	Screw	2	009669-4-12	
k- 6	Needle Clamp 2.2	1		146773-0-01
k- 7	Screw	2	146427-0-01	
k- 8	Needle Cat. No. 6120 #14	2	151200-0-14	
k- 9	Screw	1	100080-0-04	
k-10	Washer	1	025030-1-32	
k-11	Presser Foot Hinge Spring	1	146887-0-01	
k-12	Chaining-off Finger	1	146907-0-01	146906-0-01
k-13	Screw	1	100105-0-05	
k-14	Presser Foot (Rear)	1	145774-0-01	
k-15	Presser Foot	1		
k-16	Throat Plate	1		
k-17	Spacer	1	146787-0-01	
k-18	Screw	2	105216-0-01	
k-19	Main Feed (Back) Dog	1	146745-0-01	
k-20	Differential Feed (Front) Dog	1	146750-0-01	
k-21	Chain Feed Dog	1	146578-0-01	
k-22	Needle Guard F	1	146777-0-01	
k-23	Main Feed Shaft	1	144068-0-01	
k-24	Screw	2	014680-4-22	146611-1-01
k-25	Set Collar	1		

Ref. No.	Name of Parts	Q'ty	Parts No.	Assembly No.
k-26	Looper (Right Hand) Holder Guide Base	1		
k-27	Looper (Right Hand) Holder Guide Block	1		
k-28	Looper (Right Hand) Holder Supporting Plate	1		
k-29	Taper Pin	2		146611-1-01
k-30	Screw	2	009681-0-12	
k-31	Screw	1	149170-0-01	
k-32	Looper (Right Hand) Driving Lever	1		
k-33	Screw	1	148294-0-01	
k-34	Wick	1	140416-0-00	
k-35	Looper (Right Hand) Holding Shaft	1		
k-36	Looper (Right Hand) Holder	1		
k-37	Screw	1	014680-4-22	147937-0-01
k-38	Looper (Right Hand)	1		
k-39	Front Cover	1		
k-40	Spring	1	146442-0-01	
k-41	Front Cover Hinge	1	146440-0-01	148993-0-01
k-42	Front Cover Hinge Pin	1	146441-0-00	
k-43	Pin	1	047140-8-42	
k-44	Hinge Cover	1	148984-0-01	
k-45	Spring	2	144104-0-01	
k-46	Needle Thread Guide Plate	1	110813-0-01	

NOTE! PREFIX ALL NUMBERS BY 'BR'.
EXAMPLE BR146222-0-01

m. 832U049-◌ Needle Gauge 2.2 mm (Chain-back)

This machine is the same as the 831U001-◌ (A~H) with exceptions of 832U Common Parts (Page 20, a) and Parts shown below :

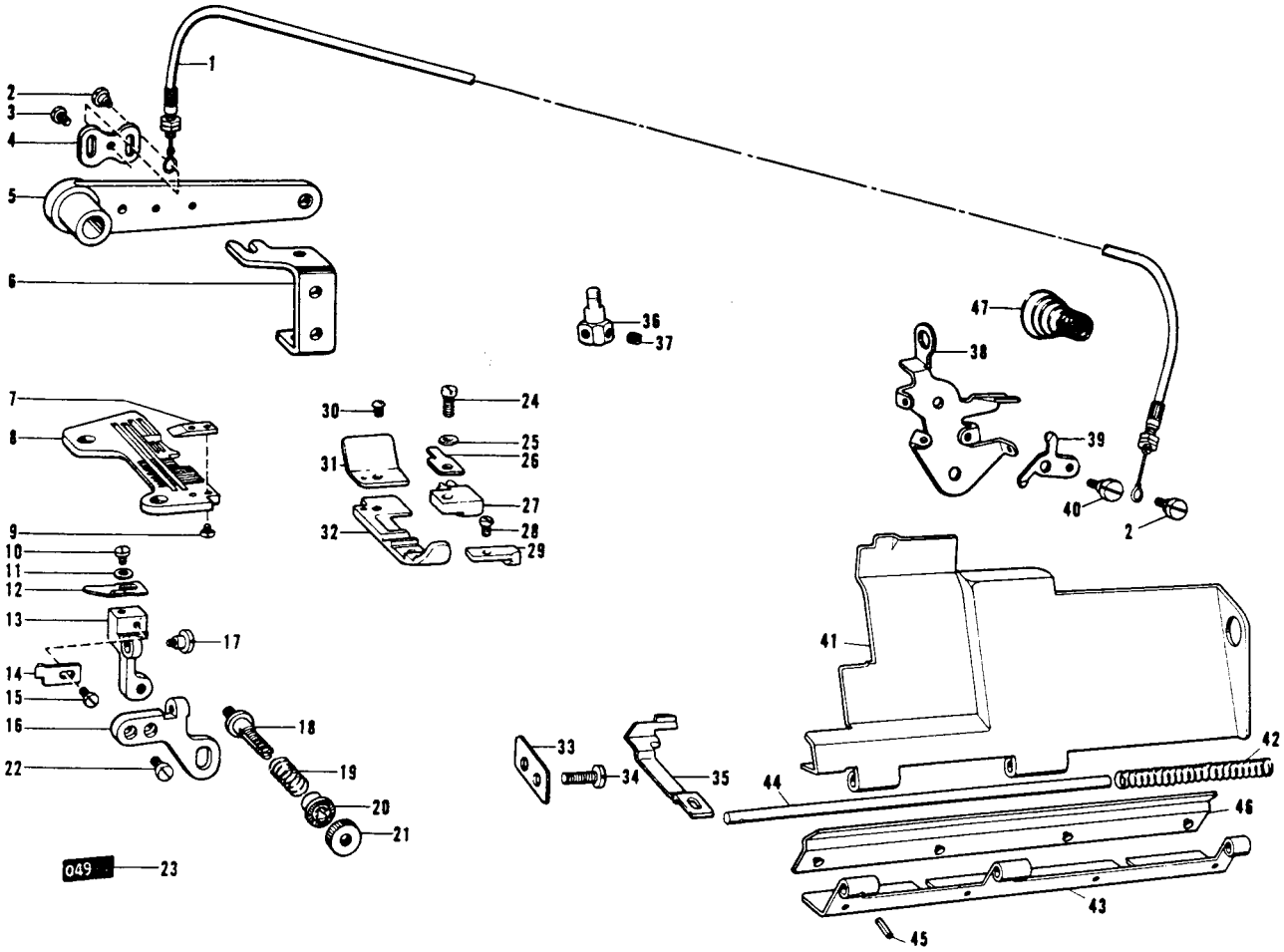

Ref. No.	Name of Parts	Q'ty	Parts No.	Assembly No.
m- 1	Flexible Wire Assembly	1	147480-0-01	
m- 2	Screw	2	141514-0-01	
m- 3	Screw	2	009670-6-12	
m- 4	Wire Plate	1	147672-0-01	
m- 5	Presser Foot Lifter Lever	1	148369-0-01	
m- 6	Lever Adjuster Plate	1	147454-0-01	
m- 7	Chain-Back Guide	1	147484-0-01	
m- 8	Throat Plate	1		
m- 9	Screw	2	141544-0-01	
m-10	Screw	1	009660-4-12	
m-11	Washer	1	025030-1-32	
m-12	Chain-Back Blade Presser Plate	1	147477-0-01	
m-13	Chain-Back Blade Holder	1		
m-14	Chain-Back Knife	1	147478-0-01	
m-15	Screw	1	009660-4-12	
m-16	Chain-Back Blade Holder Supporter	1		147473-0-01
m-17	Screw	1	147476-0-01	
m-18	Thread Tension Control Stud	1	147148-0-01	
m-19	Spring	1	147479-0-01	
m-20	Washer	1	144105-0-00	
m-21	Upper Thread Tension Adjusting Screw	1	105230-0-01	
m-22	Screw	2	009670-6-12	

Ref. No.	Name of Parts	Q'ty	Parts No.	Assembly No.
m-23	Label	1		
m-24	Screw	1	100080-0-04	
m-25	Washer	1	025030-1-32	
m-26	Presser Foot Hinge Spring	1	146887-0-01	
m-27	Chaining-off Finger	1	146903-0-01	
m-28	Screw	1	009639-3-12	146902-0-01
m-29	Presser Foot (Front)	1	146888-0-01	
m-30	Screw	1	100105-0-05	
m-31	Presser Foot (Rear)	1	146889-0-01	
m-32	Presser Foot	1		
m-33	Spacer	1	146787-0-01	
m-34	Screw	2	105216-0-01	
m-35	Needle Guard F	1	146777-0-01	
m-36	Needle Clamp 2.2	1		
m-37	Screw	2	146427-0-01	146773-0-01
m-38	Thread Guide Support	1	148370-0-01	
m-39	Tension Release Lever	1	148371-0-01	
m-40	Screw	1	141514-0-01	
m-41	Front Cover	1		
m-42	Spring	1	146442-0-01	
m-43	Front Cover Hinge	1	146440-0-01	
m-44	Front Cover Hinge Pin	1	146441-0-00	148993-0-01
m-45	Pin	1	047140-8-42	
m-46	Hinge Cover	1	148984-0-01	
m-47	Spring	2	144104-0-01	

NOTE! PREFIX ALL NUMBERS BY 'BR'.
EXAMPLE BR146222-0-01

n. 832U050-◌ Needle Gauge 2.2 mm (Piping)

This machine is the same as the 831U001- (A~H) with exceptions of 832U Common Parts (Page 20, a) and Parts shown below :

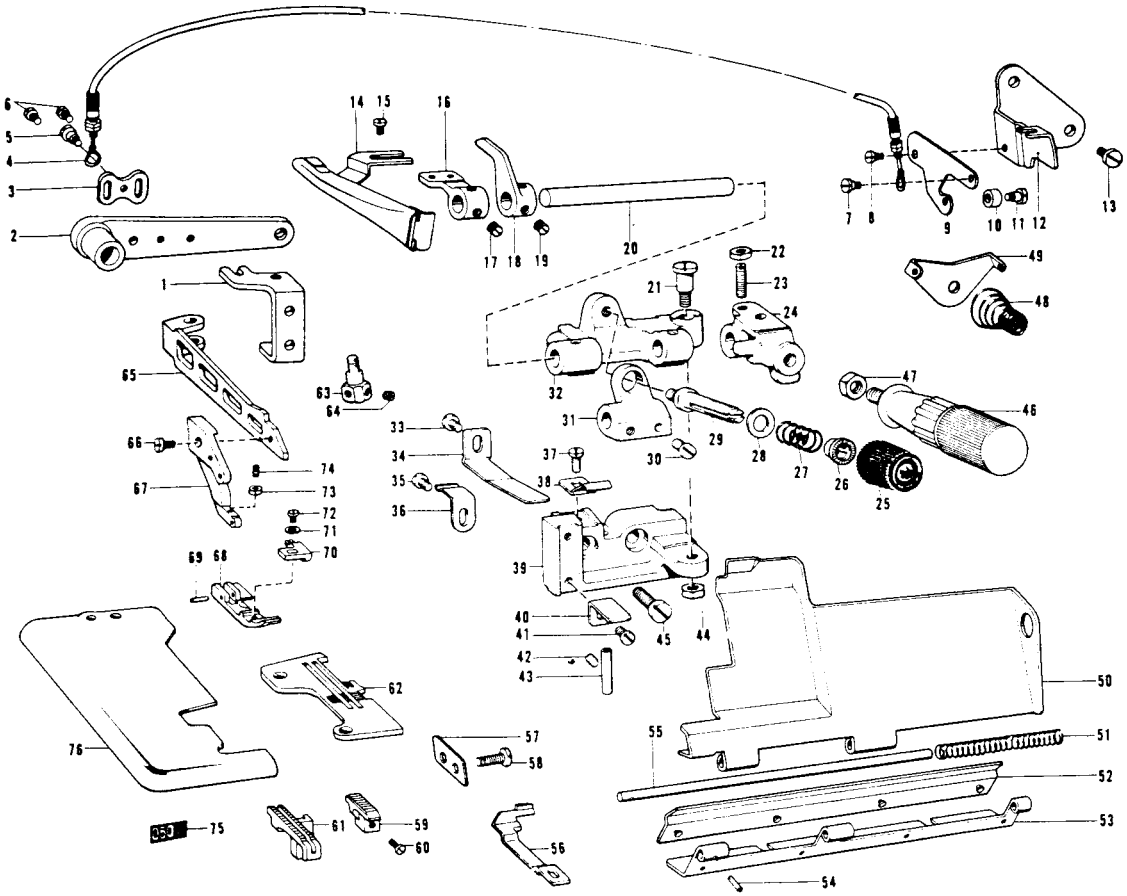

Ref. No.	Name of Parts	Q'ty	Parts No.	Assembly No.
n- 1	Lever Adjuster Plate	1	147454-0-01	
n- 2	Presser Foot Lifter Lever	1	148369-0-01	
n- 3	Wire Plate	1	147672-0-01	
n- 4	Flexible Wire Assembly	1	148391-0-01	
n- 5	Screw	1	141514-0-01	
n- 6	Screw	2	009670-6-12	
n- 7	Screw	1	141514-0-01	
n- 8	Screw	1	141514-0-01	
n- 9	Ruffling Plate Lifter Lever	1	148388-0-01	
n-10	Roller	1	148390-0-01	148395-0-01
n-11	Screw	1	112301-0-01	
n-12	Presser Foot Lifter Lever Support	1	148389-0-01	
n-13	Screw	2	110735-0-02	
n-14	Binder	1	149197-0-00	
n-15	Screw	2	009680-6-12	
n-16	Binder Base	1		
n-17	Screw	2	101706-0-01	
n-18	Presser Foot Lifter	1	148387-0-01	
n-19	Screw	2	101706-0-01	
n-20	Ruffling Blade Base Shaft	1	149203-0-01	
n-21	Screw	1		
n-22	Nut	1	105234-0-03	
n-23	Screw	1	110230-0-01	
n-24	Handle Fixing Plate	1		
n-25	Thread Tension Adjusting Nut	1	149566-0-02	
n-26	Washer	1	144105-0-00	
n-27	Spring	1	144788-0-01	149202-0-01
n-28	Washer	1	025770-2-32	
n-29	Looper Thread Tension Control Stud	1	110820-0-01	
n-30	Screw	2	105163-0-01	
n-31	Spring Base	1		
n-32	Bracket for Ruffling Blade	1		
n-33	Screw	1	009680-6-12	
n-34	Spring	1		
n-35	Screw	1	001670-5-12	
n-36	Spring	1	144764-0-01	
n-37	Screw	1	009680-6-12	
n-38	Spring	1	145808-0-01	

Ref. No.	Name of Parts	Q'ty	Parts No.	Assembly No.
n-39	Ruffler Base	1		
n-40	Ruffling Blade Guide	2		
n-41	Screw	2	009680-8-12	
n-42	Screw	1	013679-4-12	149202-0-01
n-43	Thread Guide Pipe	1		
n-44	Nut	1	150553-0-02	
n-45	Screw	2	009781-8-12	
n-46	Handle	1	145809-0-01	
n-47	Nut	1	150556-0-02	
n-48	Spring	2	144104-0-01	
n-49	Needle Thread Guide Plate	1	110813-0-01	
n-50	Front Cover	1		
n-51	Spring	1	146442-0-01	
n-52	Hinge Cover	1	148984-0-01	
n-53	Front Cover Hinge	1	146440-0-01	146763-0-01
n-54	Pin	1	047140-8-42	
n-55	Front Cover Hinge Pin	1	146441-0-00	
n-56	Needle Guard F	1	146777-0-01	
n-57	Spacer	1	146787-0-01	
n-58	Screw	1	105216-0-01	
n-59	Chain Feed Dog	1	149194-0-01	
n-60	Screw	1	009660-7-12	
n-61	Main Feed (Back) Dog	1	149193-0-01	
n-62	Throat Plate	1		
n-63	Needle Clamp 2.2	1		146773-0-01
n-64	Screw	1	146427-0-01	
n-65	Main Presser Arm	1	146526-0-01	
n-66	Screw	1	009680-7-12	
n-67	Sub Presser Arm	1		
n-68	Presser Foot	1		
n-69	Pin	1	149183-0-01	
n-70	Chaining-off Finger	1	150739-0-01	149195-1-01
n-71	Washer	1	025030-1-32	
n-72	Screw	1	009660-4-12	
n-73	Nut	1	021660-1-02	
n-74	Screw	1	103978-0-02	
n-75	Label	1		
n-76	Cloth Plate	1	146716-0-01	

NOTE! PREFIX ALL NUMBERS BY 'BR'.
EXAMPLE BR146222-0-01

Z. Thread Unwinder 4 THF

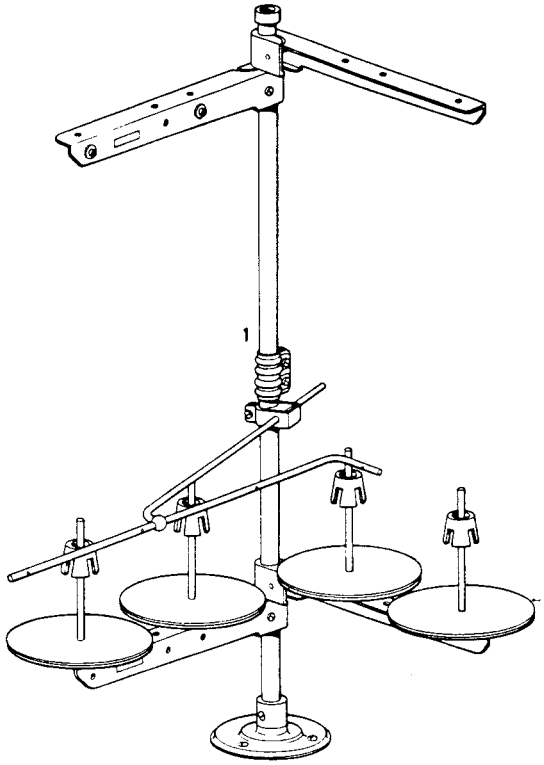

Ref. No.	Name of Parts	Q'ty	Parts No.	Assembly No.
z- 1	Thread Unwinder 4 THF	1	150161-0-02	

[NOTE! PREFIX ALL NUMBERS BY 'BR'.
EXAMPLE BR146222-0-01]

DIFFERENT PARTS LIST

Class	Variety	No. of Needles	No. of Threads	Needle Gauge mm	Bight mm	Max. Stitch mm	Differential Ratio	Presser Foot Lift mm	Feed Dog Pitch mm	Feed Dog Type	Needle Size	Sewing Speed	Face Plate Assembly		Front Cover Assembly		Needle Bar Assembly		Needle Bar	
831U	001-3 -4 -5 -6	1	3	–	3 4 5 6	3.6	0.6~1.8	6	1.6	A	#11	6500	A-7	14642800	A 35~39 · 83	14899100	B 12~13	14762900		
	002-5 -6 -7	1	3	–	5 6 7	2.5	1.3~4	7	2	B	#14	6000	1-1	14670600	A 35~39 · 83	14899100	B 12~13	14762900		
	003-3 -4 -5	1	3	–	3 4 5	3.6	0.6~1.8	6	1.6	A	#9	6500	A-7	14642800	A 35~39 · 83	14899100	B 12~13	14762900		
	004-3 -4	1	2	–	3 4	3.6	0.6~1.8	6	1.6	A	#9	6500	A-7	14642800	A 35~39 · 83	14899100	B 12~13	14762900		
	005-4 -5 -6	1	2	–	4 5 6	3.6	0.6~1.8	4	1.6	A	#14	6000	A-7	14642800	A 35~39 · 83	14899100	B 12~13	14762900		
	006-4 -5	1	3	–	4 5	3.6	0.6~1.8	4	1.6	A	#14	6000	A-7	14642800	A 35~39 · 83	14899100	B 12~13	14762900		
	007-2 -4	1	3	–	2 4	3.6	1.6~1.8	6	1.6	A	#11	6500	A-7	14642800	A 35~39 33	14899100	B 12~13	14762900		
	008-5	1	3	–	5	3.3	1~3	5	1.6	C	#11	6000	K-1	14643000	K 53~58	14671000	B 12~13	14762900		
	009-5	1	3	–	5	3.3	1~3	5	1.6	D	#11	6000	L-1	14643000	L 56~61	14671000	B 12~13	14762900		
	010-5	1	3	–	5	3.6	0.6~1.8	6	1.6	A	#11	6500	A-7	14642800	A 35~39 · 83	14899100	B 12~13	14762900		
	011-6 -7	1	3	–	6 7	2.5	1.3~4	7	2	B	#14	6000	N-1	14670600	A 35~39 · 83	14899100	B 12~13	14762900		
	012-3 -4 -5 -6	1	3	–	3 4 5 6	3.6	0.6~1.8	6	1.6	A	#11	6500	A-7	14642800	A 35~39 · 83	14899100	B 12~13	14762900		
832U	021-4	2	4	1.8	4	3.6	0.6~1.8	6	1.6	A	#11	6500	A-7	14642800	b 22~27	14899300			a-1	14648300
	022-5 -6	2	4	2.2	5 6	3.6	0.6~1.8	6	1.6	E	#11	6500	A-7	14642800	c 18~23	14899300			a-1	14648300
	023-5 -6	2	4	2.2	5 6	3.6	0.6~1.8	6	1.6	E	#11	6500	A-7	14642800	d 20~25	14899300			a-1	14648300
	024-5	2	4	3	5	3.6	0.6~1.8	6	1.6	E	#11	6500	A-7	14642800	b 17~22	14899500			a-1	14648300
	025-6	2	4	3	6	3.6	0.6~1.8	6	1.6	E	#11	6500	A-7	14642800	c 19~24	14899500			a-1	14648300
	026-4 -5 -6	2	4	1.8	4 5 6	2.5	1.3~4	7	1.6	G	#11	6000	d-1	14670600	d 27~32	14899300			a-1	14648300
	027-5 -6 -7	2	4	2.2	5 6 7	2.5	1.3~4	7	2	B	#14	6000	e-1	14670600	e 37~42	14899300			a-1	14648300
	028-5 -6 -7	2	4	2.2	5 6 7	2.5	1.3~4	7	2	B	#14	6000	e-1	14670600	e 37~42	14899300			a-1	14648300
	031-7	2	4	3	7	3.6	0.6~1.8	7	2.5	F	#21	6000	A-7	14642800	f 20~25	14899500			a-1	14648300
	032-7	2	4	3	7	3.6	0.6~1.8	7	2.5	F	#21	6000	A-7	14642800	f 20~25	14899500			a-1	14648300
	033-5	2	4	2.2	5	3.3	1~3	5	1.6	C	#11	6000	g-1	14643000	g 58~63	14676300			a-1	14648300
	034-5	2	4	2.2	5	3.3	1~3	5	1.6	C	#11	6000	g-1	14643000	g 61~66	14676300			a-1	14648300
	037-5	2	4	2.2	5	3.3	1~3	5	1.6	D	#11	6000	h-1	14643000	h 60~65	14676300			a-1	14648300
	038-5	2	4	2.2	5	3.3	1~3	5	1.6	D	#11	6000	h-1	14643000	h 60~65	14676300			a-1	14648300
	041-5	2	4	2.2	5	3.6	0.6~1.8	6	1.6	E	#11	6500	A-7	14642800	i 18~23	14899300			a-1	14648300
	045-5 -6 -7	2	4	2.2	5 6 7	2.5	1.3~4	7	2	B	#14	6000	K-1	14670600	k 39~44	14899300			a-1	14648300
	049-5 -6	2	4	2.2	5 6	3.6	0.6~1.8	6	1.6	A	#11	6500	A-7	14642800	m 41~46	14899300			a-1	14648300
	050-5	2	4	2.2	5	3.6	——	5	1.6	H	#11	6500	A-7	14642800	n 50~55	14676300			a-1	14648300

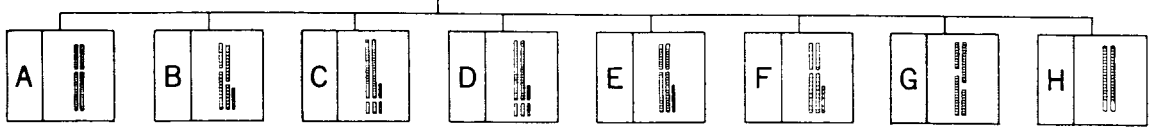

Needle Clamp Assembly		Needle Cat. No. 6120-8538 6122		Needle Guard F		Throat Plate		Spacer		Screw		Presser Foot Assembly		Main Feed Link Shaft		Differential Feed Indicator	
		B－14	151200011	B－64	146726001	B－80	146730001 146731001 146732001 146733001			H－5	100257010	E 58～66	146884001	D－22	143564001	D－91	146561001
		I－4	151200014	B－64	146726001	I－12	146734001 146735001 146736001			H－5	100257010	I 5～11	146898001	I－16	144068001	I－2	146742001
		J－6	151200009	B－64	146726001	J－23	146730001 146731001 146732001			H－5	100257010	J 1～5	146890001	D－22	143564001	D－91	146561001
		I'－6	151200009	B－64	146726001	I'－27	146730001 146731001			H－5	100257010	I' 1～5	146890001	D－22	143564001	D－91	146561001
		M－1	151200014	B－64	146726001	M－26	146731001 146732001 146733001			H－5	100257010	M 2～10	146893001	D－22	143564001	D－91	146561001
		J'－1	151200014	B－64	146726001	J'－22	146731001 146732001			H－5	100257010	J' 2～10	146893001	D－22	143564001	D－91	146561001
		B－14	151200011	B－64	146726001	K'10～12	148352001 148314001			H－5	100257010	K' 1～5	148311001	D－22	143564001	D－91	146561001
		B－14	151200011	B－64	146726001	K－12	146737001			H－5	100257010	K 5～11	144811001	D－22	143564001	K－2	146562001
		B－14	151200011	B－64	146726001	L－12	146737001			H－5	100257010	L 5～11	147433001	D－22	143564001	L－2	146562001
		B－14	151200011	B－64	146726001	M'－11	146732001			H－5	100257010	M' 3～9	146895001	D－22	143564001	D－91	146561001
		N－6	151200014	B－64	146726001	N－14	146735001 146736001			H－5	100257010	N 7～13	146895001	N－18	144068001	N－2	146742001
		B－14	151200011	B－64	146726001	N'－7	147449001 147450001 147451001 147452001			H－5	100257010	E 58～66	146884001	D－22	143564001	D－91	146561001
b 1～2	146771001	b－3	151206011	b－16	146777001	b－13	146779001	b－14	146787001	b－15	105216001	b 4～12	146963001	D－22	143564001	D－91	146561001
c 1～2	146773001	B－14	151200011	c－15	146777001	c－12	146781001 146782001	c－13	146787001	c－14	105216001	c 3～11	146902001	D－22	143564001	D－91	146561001
d 1～2	146773001	B－14	151200011	d－16	146777001	d－12	146781001 146782001	d－13	146787001	d－14	105216001	d 3～11	146902001	D－22	143564001	D－91	146561001
b' 1～2	146775001	B－14	151200011	b'－15	146778001	b'－12	148030001	b'－13	146788001	b'－14	105216001	b' 3～11	146965001	D－22	143564001	D－91	146561001
c' 1～2	146775001	B－14	151200011	c'－15	146778001	c'－12	148031001	c'－13	146788001	c'－14	105216001	c' 3～11	146965001	D－22	143564001	D－91	146561001
d' 3～4	146771001	d－5	151206011	d'－18	146777001	d'－15	146779001 146780001 148832001	d'－16	146787001	d－17	105216001	d' 6～14	146963001	d－22	144068001	d'－2	146742001
e 4～5	146773001	e－6	151200014	e－20	146777001	e－14	146781001 146782001 146783001	e－15	146787001	e－16	105216001	e 7～13	147952001 146904001 146904001	e－21	144068001	e－2	146742001
e' 4～5	146773001	e'－6	151200014	e'－20	146777001	e'－14	146781001 146782001 146783001	e'－15	146787001	e－16	105216001	e' 7～13	147952001 146904001 146904001	e－21	144068001	e'－2	146742001
f 1～2	146775001	f－3	152186021	f－16	146778001	f－13	146785001	f－14	146788001	f－15	105216001	f 4～12	146965001	D－22	143564001	D－91	146561001
f' 1～2	146775001	f'－3	152186021	f'－16	146778001	f'－13	146785001	f'－14	146788001	f'－15	105216001	f' 4～12	146965001	D－22	143564001	D－91	146561001
g 5～6	146773001	B－14	151200011	g－20	146777001	g－14	146786001	g－18	146787001	g－19	105216001	g 7～13	144815001	D－22	143564001	g－2	146562001
g' 5～6	146773001	B－14	151200011	g'－20	146777001	g'－14	146786001	g'－18	146787001	g－19	105216001	g' 7～13	144815001	D－22	143564001	g－2	146562001
h 5～6	146773001	B－14	151200011	h－20	146777001	h－14	146786001	h－18	146787001	h－19	105216001	h 7～13	147439001	D－22	143564001	h－2	146562001
h' 5～6	146773001	B－14	151200011	h'－20	146777001	h'－14	146786001	h－18	146787001	h－19	105216001	h' 7～13	147439001	D－22	143564001	h'－2	146562001
i 1～2	146773001	B－14	151200011	i－15	146777001	i－12	146781001	i－13	146787001	i－14	105216001	i 5～11	146906001	D－22	143564001	D－91	146561001
k 6～7	146773001	K－8	151200014	k－22	146777001	k－16	146781001 146782001 146783001	k－17	146787001	k－18	105216001	k 9～15	146906001	K－23	144068001	K－2	146742001
m36～37	146773001	B－14	151200011	m－35	146777001	m－8	148366001 148367001	m－33	146787001	m－34	105216001	m24～32	146902001	D－22	143564001	D－91	146561001
n 63·64	146773001	B－14	151200011	n－56	146777001	n－62	149192001	n－57	146787001	n－58	105216001	n 67～74	149195101	D－22	143564001	D－91	146561001

027-5	e-10	Presser Foot Chaining-off Finger	1	146907-0-01
027-6 -7	e-10	Presser Foot Chaining-off Finger	1	146905-0-01

028-5	e'-10	Presser Foot Chaining-off Finger	1	146907-0-01
028-6 -7	e'-10	Presser Foot Chaining-off Finger	1	146905-0-01

Class	Variety	Main Feed (Back) Dog		Differential Feed (Front) Dog		Chain Feed Dog		Looper (Right Hand) Holder Assembly		Looper (Right Hand) Assembly		Needle Thread Take-up		Washer		Oil Cap	
831U	001-3 -4 -5 -6	D-49	146744001	D-53	146748001	D-51	146577001	C21~27 C44~49	146603101	C51~52	147934001	F-8	144108001	F-9	105248003	A-28	111865001
	002-5 -6 -7	I-13	146745001	I-15	146750001	I-14	146578001	I17~29	146611101	I30~31	147937001	F-8	144108001	F-9	105248003	A-28	111865001
	003-3 -4 -5	D-49	146744001	D-53	146748001	D-51	146577001	C21~27 C44~49	146603101	C51~52	147934001	F-8	144108001	F-9	105248003	A-28	111865001
	004-3 -4	D-49	146744001	D-53	146748001	D-51	146577001	C21~27 C44~49	146603101	I'10~11	147935001	I'-9	142201001			A-28	111865001
	005-4 -5 -6	D-49	146744001	D-53	146748001	D-51	146577001	C21~27 C44~49	146603101	M13-14	147935001	M-12	142201001				
	006-4 -5	D-49	146744001	D-53	146748001	D-51	146577001	C21~27 C44~49	146603101	C51~52	147934001	F-8	144108001	F-9	105248003		
	007-2 -4	D-49	146744001	D-53	146748001	D-51	146577001	C21~27 C44~49	146603101	C51~52	147934001	F-8	144108001	F-9	105248003	A-28	111865001
	008-5	K-13	146746001	K-15	146751001	K-14	146578001	C21~27 C44~49	146603101	C51~52	147934001	F-8	144108001	F-9	105248003		
	009-5	L-13	147828001	L-15	146751001	L-14	147832001	C21~27 C44~49	146603101	C51~52	147934001	F-8	144108001	F-9	105248003		
	010-5	D-49	146744001	D-53	146748001	D-51	146577001	C21~27 C44~49	146603101	C51~52	147934001	F-8	144108001	F-9	105248003	A-28	111865001
	011-6 -7	N-15	146745001	N-17	146750001	N-16	146578001	N19~31	146611101	N32~33	147937001	F-8	144108001	F-9	105248003	A-28	111865001
	012-3 -4 -5 -6	D-49	146744001	D-53	146748001	D-51	146577001	C21~27 C44~49	146603101	C51~52	147934001	F-8	144108001	F-9	105248003	A-28	111865001
832U	021-4	D-49	146744001	D-53	146748001	D-51	146577001	C21~27 C44~49	146603101	C51~52	147934001	F-8	144108001	F-9	105248003	A-28	111865001
	022-5 -6	D-49	146744001	c-17	146749001	D-51	146577001	C21~27 C44~49	146603101	C51~52	147934001	F-8	144108001	F-9	105248003	A-28	111865001
	023-5 -6	D-49	146744001	d-17	146749001	D-51	146577001	C21~27 C44~49	146603101	d18~19	147936001	F-8	144108001	F-9	105248003	A-28	111865001
	024-5	D-49	146744001	b'-16	146749001	D-51	146577001	C21~27 C44~49	146603101	C51~52	147934001	F-8	144108001	F-9	105248003	A-28	111865001
	025-6	D-49	146744001	c'-16	146749001	D-51	146577001	C21~27 C44~49	146603101	c'17~18	147936001	F-8	144108001	F-9	105248003	A-28	111865001
	026-4 -5 -6	d'-19	148401001	d'-21	148402001	d-20	146578001	d33~45	146611101	d46~47	147937001	F-8	144108001	F-9	105248003	A-28	111865001
	027-5 -6 -7	e-17	146745001	e-18	146750001	e-19	146578001	e22~34	146611101	e35~36	147937001	F-8	144108001	F-9	105248003	A'-28	111865001
	028-5 -6 -7	e'-17	146745001	e'-18	146750001	e-19	146578001	e'22~34	146611101	e35~36	147936001	F-8	144108001	F-9	105248003	A-28	111865001
	031-7	f-18	147690001	f-19	146791001	D-51	146577001	f26~38	146611101	f39~40	147937001	F-8	144108001	F-9	105248003	A-28	111865001
	032-7	f'-18	146790001	f'-19	146791001	D-51	146577001	f'26~38	146611101	f'39~40	147936001	F-8	144108001	F-9	105248003	A-28	111865001
	033-5	g-15	146746001	g-17	146751001	g-16	146578001	C21~27 C44~49	146603101	C51~52	147934001	F-8	144108001	F-9	105248003		
	034-5	g'-15	146746001	g'-17	146751001	g'-16	146578001	C21~27 C44~49	146603101	g'21~22	147936001	F-8	144108001	F-9	105248003		
	037-5	h-15	147828001	h-17	146751001	h-16	147832001	C21~27 C44~49	146603101	C51~52	147934001	F-8	144108001	F-9	105248003		
	038-5	h'-15	147828001	h'-17	146751001	h-16	147832001	C21~27 C44~49	146603101	h'69~70	147936001	F-8	144108001	F-9	105248003		
	041-5	D-49	146744001	J-17	146749001	D-51	146577001	C21~27 C44~49	146603101	C51~52	147934001	F-8	144108001	F-9	105248003	A-28	111865001
	045-5 -6 -7	K-19	146745001	K-20	146750001	K-21	146578001	K24~36	146611101	k37~38	147937001	F-8	144108001	F-9	105248003	A-28	111865001
	049-5 -6	D-49	146744001	D-53	146748001	D-51	146577001	C21~27 C44~49	146603101	C51~52	147934001	F-8	144108001	F-9	105248003	A-28	111865001
	050-5	n-61	149193001			n-59	149194001	C21~27 C44~49	146603101	C51~52	147934001	F-8	144108001	F-9	105248003		

Threading Diagram		Label		Cloth Plate		Label		Thread Guide Supporter		Presser Foot Lifter Lever		Adjuster Plate		Felt Holder Assembly		Blind Stitch Hemming Guide Assembly	
A－34	146718001	A－20	146974001 146974002 146974003 146974054	A－62	146448001	A－101	147943001	F－11	146649001	E－21	143323103	E－23	146522001	H 1～4	146738000		
A－34	146718001	I－3	146974004 146974005 146974006	A－62	146448001	A－101	147943001	F－11	146649001	E－21	143323103	E－23	146522001	H 1～4	146738000		
A－34	146718001	J－7	146974007 146974008 146974009	J－24	146716001	A－101	147943001	F－11	146649001	E－21	143323103	E－23	146522001	H 1～4	146738000	J 8～21	147710001
I'－8	146719001	I'－7	146974010 146974011	I'－28	146716001			F－11	146649001	E－21	143323103	E－23	146522001	H 1～4	146738000	I'12～25	147710001
M－11	146719001	M－25	146974014 146974015	A－62	146448001			F－11	146649001	E－21	143323103	E－23	146522001	H 1～4	146738000		
A－34	146718001	J'－21	146974017	A－62	146448001	A－101	147943001	F－11	146649001	E－21	143323103	E－23	146522001	H 1～4	146738000		
A－34	146718001	K'－13	146974057 146974056	A－62	146448001	A－101	147943001	F－11	146649001	E－21	143323103	E－23	146522001	H 1～4	146738000		
A－34	146718001	K－4	146974019	A－62	146448001	A－101	147943001	F－11	146649001	E－21	143323103	E－23	146522001	H 1～4	146738000		
A－34	146718001	L－4	146974020	A－62	146448001	A－101	147943001	F－11	146649001	E－21	143323103	E－23	146522001	H 1～4	146738000		
A－34	146718001	M－10	146974021	A－62	146448001	A－101	147943001	F－11	146649001	E－21	143323103	E－23	146522001	H 1～4	146738000		
A－34	146718001	N－3	146974025	A－62	146448001	A－101	147943001	F－11	146649001	E－21	143323103	E－23	146522001	H 1～4	146738000		
A－34	146718001	N'－26	146974042 146974043 146974044 146974058	A－62	146448001	A－101	147943001	N'－23	147485001	N'－5	148369001	N'－6	147454001	H 1～4	146738000		
a－12	146765001	b－17	146975039	A－62	146448001	A－101	147943001	F－11	146649001	E－21	143323103	E－23	146522001	b 18～21	148008000		
a－12	146765001	c－16	146975004 146975005	A－62	146448001	A－101	147943001	F－11	146649001	E－21	143323103	E－23	146522001	H 1～4	146738000		
a－12	146765001	d－15	146975065 146975010	A－62	146448001	A－101	147943001	F－11	146649001	E－21	143323103	E－23	146522001	H 1～4	146738000		
a－12	146765001	b'－23	146975064	A－62	146448001	A－101	147943001	F－11	146649001	E－21	143323103	E－23	146522001	H 1～4	146738000		
a－12	146765001	c－25	146975010	A－62	146448001	A－101	147943001	F－11	146649001	E－21	143323103	E－23	146522001	H 1～4	146738000		
a－12	146765001	d－48	146975068 146975012 146975013	A－62	146448001	A－101	147943001	F－11	146649001	E－21	143323103	E－23	146522001	d'23－26	148008000		
a－12	146765001	e－3	146975062 146975041 146975015	A－62	146448001	A－101	147943001	F－11	146649001	E－21	143323103	E－23	146522001	H 1～4	146738000		
a－12	146765001	e'－3	146975063 146975069 146975016	A－62	146448001	A－101	147943001	F－11	146649001	E－21	143323103	E－23	146522001	H 1～4	146738000		
a－12	146765001	f－17	146975017	A－62	146448001	A－101	147943001	F－11	146649001	E－21	143323103	E－23	146522001	H 1～4	146738000		
a－12	146765001	f'－17	146975018	A－62	146448001	A－101	147943001	F－11	146649001	E－21	143323103	E－23	146522001	H 1～4	146738000		
a－12	146765001	g－4	146975019	A－62	146448001	A－101	147943001	F－11	146649001	E－21	143323103	E－23	146522001	H 1～4	146738000		
a－12	146765001	g'－4	146975020	A－62	146448001	A－101	147943001	F－11	146649001	E－21	143323103	E－23	146522001	H 1～4	146738000		
a－12	146765001	h－4	146975021	A－62	146448001	A－101	147943001	F－11	146649001	E－21	143323103	E－23	146522001	H 1～4	146738000		
a－12	146765001	h'－4	146975022	A－62	146448001	A－101	147943001	F－11	146649001	E－21	143323103	E－23	146522001	H 1～4	146738000		
a－12	146765001	j－16	146975023	A－62	146448001	A－101	147943001	F－11	146649001	E－21	143323103	E－23	146522001	H 1～4	146738000		
a－12	146765001	k－3	146975031 146975032 146975033	A－62	146448001	A－101	147943001	F－11	146649001	E－21	143323103	E－23	146522001	H 1～4	146738000		
a－12	146765001	m－23	146975066 146975067	A－62	146448001	A－101	147943001	m－38	148370001	m－5	148369001	m－6	147454001	H 1～4	146738000		
a－12	146765001	n－75	146975072	n－76	146716001	A－101	147943001	F－11	146649001	n－2	148369001	n－1	147454001	H 1～4	146738000		

Class	Variety	Screw		Guide		Screw		Ruffler Device Assembly		Screw		Ruffler Guide		Screw		Knee Adjuster Parts Set	
831U	001-3 -4 -5 -6																
	002-5 -6 -7																
	003-3 -4 -5	J-22	009670612														
	004-3 -4	I-26	009670612														
	005-4 -5 -6			M16~24	146761001	M-15	110201001										
	006-4 -5			J'12~20	146761001	J'-11	110201001										
	007-2 -4																
	008-5							K16~47	146587002	K-48	009781812	K-49	144793001	K-50	112751002	P18~37	151224001
	009-5							L16~47	146587002	L-48	009781812	L-49	144793001	L-50	112751002	P18~37	151224001
	010-5																
	011-6 -7																
	012-3 -4 -5 -6																
832U	021-4																
	022-5 -6																
	023-5 -6																
	024-5																
	025-6																
	026-4 -5 -6																
	027-5 -6 -7																
	028-5 -6 -7																
	031-7																
	032-7																
	033-5							g21~52	146587002	g-53	009781812	g-54	144793000	g-55	112751002	P18~37	151224001
	034-5							g'23~54	146587002	g'-55	009781812	g'-56	144793000	g'-57	112751002	P18~37	151224001
	037-5							h21~52	146587002	h-53	009781812	h-54	144793000	h-55	112751002	P18~37	151224001
	038-5							h'21~52	146587002	h'-53	009781812	h'-54	144793000	h'-55	112751002	P18~37	151224001
	041-5																
	045-5 -6 -7																
	049-5 -6																
	050-5							n16~44	149202001	n-45	009781812						

Screw		Connecting Bar		Stud Screw		Binder		Screw		Thread Unwinder Assembly		Tape Winder Assembly		Screw		Tape Guide	
P − 18	033452502	P − 28	146593001	P − 27	146594001												
P − 18	033452502	P − 28	146593001	P − 27	146594001	L − 53	147440000	L − 54	009680612	P 1 ~ 7	181031001	P 8 ~ 16	143767002	P − 17	101118001		
																M′ − 1	146883001
																N − 4	146883001
P − 18	033452502	P − 28	146593001	P − 27	146594001												
P − 18	033452502	P − 28	146593001	P − 27	146594001												
P − 18	033452502	P − 28	146593001	P − 27	146594001	h − 58	147440000	h − 59	009680612	P 1 ~ 7	181031001	P 8 ~ 16	143767002	P − 17	101118001		
P − 18	033452502	P − 28	146593001	P − 27	146594001	h′ − 58	147440000	h′ − 59	009680612	P 1 ~ 7	181031001	P 8 ~ 16	143767002	P − 17	101118001		
																j − 3	146883001
																k − 4	146883001
P − 18	033452502	P − 28	146593001	P − 27	146594001	n − 14	149197000	n − 15	009680612	P 1 ~ 7	181031001	P 8 ~ 16	143767002	P − 17	101118001		

Class	Variety	Screw		Screw Driver		Handle		Nut		Presser Foot Assembly For Chain-back		Screw		Chain-back Guide		Screw	
831U	001-3 -4 -5 -6																
	002-5 -6 -7																
	003-3 -4 -5																
	004-3 -4																
	005-4 -5 -6																
	006-4 -5																
	007-2 -4			K'-14	148925001												
	008-5					K-51	145809001	K-52	150556002								
	009-5					L-51	145809001	L-52	150556002								
	010-5	M'-2	009669412														
	011-6 -7	N-5	009669412														
	012-3 -4 -5 -6									N'10~21	147473001	N'-22	009670612	N'-8	147484001	N'-9	141544001
832U	021-4																
	022-5 -6																
	023-5 -6																
	024-5																
	025-6																
	026-4 -5 -6																
	027-5 -6 -7																
	028-5 -6 -7																
	031-7																
	032-7																
	033-5					g-56	145809001	g-57	150556002								
	034-5					g'-58	145809001	g'-60	150556002								
	037-5					h-56	145809001	h-57	150556002								
	038-5					h'-56	145809001	h'-57	150556002								
	041-5	j-4	009669412														
	045-5 -6 -7	k-5	009669412														
	049-5 -6									m10~21	147473001	m-22	009670612	m-7	147484001	m-9	141544001
	050-5					n-46	145809001	n-47	150556002								

Flexible Wire Assembly		Screw		Wire Plate		Screw		Tension Release Lever		Screw		Spring		Needle Thread Guide Plate	
												F－16	144104001		
												F－16	144104001		
												F－16	144104001		
												F－16	144104001		
												F－16	144104001		
												F－16	144104001		
												F－16	144104001		
												F－16	144104001		
												F－16	144104001		
												F－16	144104001		
												F－16	144104001		
N'－1	147480001	N'－2	141514001	N'－4	147672001	N'－3	009670612	N'－24	147483001	N'－25	141514001	F－16	144104001		
												b－28	144104001	b－29	110813001
												c－24	144104001	c－25	110813001
												d－26	144104001	d－27	110813001
												b'－24	144104001	b'－25	110813001
												c'－26	144104001	c'－27	110813001
												d'－49	144104001	d'－50	110813001
												e－43	144104001	e－44	110813001
												e'－43	144104001	e'－44	110813001
												f－41	148851001	f－42	110813001
												f'－41	148851001	f'－42	110813001
												g－64	144104001	g－65	110813001
												g－67	144104001	g'－68	110813001
												h－66	144104001	h－67	110813001
												h'－66	144104001	h'－67	110813001
												j－24	144104001	j－25	110813001
												k－45	144104001	k－46	110813001
m－1	147480001	m－2	141514001	m－4	147672001	m－3	009670612	m－39	148371001	m－40	141514001	m－47	144104001		
												n－48	144104001	n－49	110813001

Class	Variety	Ruffler Interlocking Parts Assembly	
831U	001-3 -4 -5 -6		
	002-5 -6 -7		
	003-3 -4		
	004-3 -4		
	005-4 -5 -6		
	006-4 -5		
	007-2 -4		
	008-5	Q 1~14	151227002
	009-5	Q 1~14	151227002
	010-5		
	011-6 -7		
	012-3 -4 -5 -6		
832U	021-4		
	022-5 -6		
	023-5 -6		
	024-5		
	025-6		
	026-4 -5 -6		
	027-5 -6 -7		
	028-5 -6 -7		
	031-7		
	032-7		
	033-5	Q 1~14	151227002
	034-5	Q 1~14	151227002
	037-5	Q 1~14	151227002
	038-5	Q 1~14	151227002
	041-5		
	045-5 -6 -7		
	049-5 -6		
	050-5		

INDEX

Parts No.	Ref. No.	Parts No.	Ref. No.	Parts No.	Ref. No.
001660-5-12	E -69	009670-6-12	n - 6	013679-4-12	h -50
001670-5-12	A -57	009670-8-12	B - 7		n -42
	A -59		B -39	013689-4-12	A -82
	K -35		C -18	013760-6-12	A -80
	L -35		F -35		C -12
	g -40		G -19	013761-4-10	B -55
	g' -42	009671-0-12	G -33	013770-7-10	D -87
	h -40	009671-4-12	B -72	014680-4-22	A -26
	n -35	009679-3-12	J -16		C -16
001670-6-14	I' -12		J' -17		C -22
	J - 8		I' -18		C -51
001680-5-12	B -74		M-21		E -11
	B -78	009680-6-12	K -34		I -17
005710-8-12	M-18		K -40		I -30
	J' -14		L -34		I' -11
009630-8-12	D -52		L -40·54		M-14
009639-3-12	E -60		g -39		N -19
	J' - 6		g -45		N -32
	M- 6		g' -40		c' -18
	K' - 6		g' -47		d -19
	b - 8		h -39		d' -33
	c - 7		h -45		d' -46
	d - 7		h -59		e -22
	b' - 7		n -15		e -35
	c' - 7		n -33		e' -22
	d' -10		n -37		e' -35
	f - 8	009680-7-12	A - 1		f -26
	f - 8		A -66		f -39
	m -28		A -69		f' -26
			B -11		f' -39
009660-4-12	F - 6		B -38		g' -22
	J -10		C -29		k -24
	I' -14		D -24		k -37
	N' -10		E -26		
	N' -16		E -56		
	m -10		J -20	014770-6-22	B -52
	m -15		I' -24		D -32
	n -72		n -66		F -20
009660-5-02	D -78	009680-8-12	K -44	017762-2-03	P -20
009660-5-12	Z - 3		L -44		P -29
009660-7-12	D -12		Q - 8	017771-4-12	C -36
	K -18		g -49		D -15
	L -18		g -51		D -19
	g -23		h -49		D -90
	g' -25		n -41		D -101
	h -23	009681-0-12	A -76		E -52
	n -60		B -57	017771-6-12	A -47
009669-3-12	F -10		C -27		B - 1
009669-4-12	Y -39		H -15		B -30
	M' 2		I -23		C - 7
	N - 5		N -25		D - 8
	j - 4		Y -18		E -13
	k - 5		Z - 7		E -29
009670-6-12	A -13		d' -39	018061-6-22	B -73
	A -41		e -28	021080-1-06	Z -11
	A -49		e' -28	021660-1-02	n -73
	A -53		f -32	021670-2-02	B -71
	A -61		f' -32	021680-2-02	M-24
	B -63		k -30		J' -20
	B -65			025030-1-32	E -63
	D -61	009681-2-12	A -18		I - 6
	E -49	009711-2-12	G -34		I' - 2
	F - 7	009781-8-12	K -48		J - 2
	F -23		L -48		J' - 3
	F -37		g -53		K - 6
	F -41		g' -55		K' - 2
	G - 5		h -53		L - 6
	J -22		n -45		M- 3
	I' -26	011711-4-12	E -24		M' 4
	N' 3	013679-4-12	B -17		N - 8
	N' -22		K -45		N' -11
	m - 3		L -45		b - 5
	m -22		g -50		c - 4
	Q -14		g' -52		d - 4

Parts No.	Ref. No.
025030-1-32	b' - 4
	c' - 4
	d' - 7
	e - 8
	e' - 8
	f - 5
	f' - 5
	g - 8
	g' - 8
	h - 8
	j - 6
	k -10
	m -11
	m -25
	n -71
025030-2-37	J -11
	I' -15
	Z - 2
025080-2-36	Z - 9
025350-3-32	G -20
025680-2-32	Y -17
025770-2-32	D -89
	K -30
	L -30
	g -35
	g' -37
	h -35
	n -28
028050-2-42	P - 5
028080-2-42	Z -10
031311-3-02	Y -15
033452-5-02	P -18
047140-8-42	A -38
	K -57
	L -60
	b -26
	c -22
	d -24
	b' -21
	c' -23
	d' -31
	e -41
	e' -41
	f -24
	f' -24
	g -62
	g' -65
	h -64
	j -22
	k -43
	m -45
	n -54
048020-3-42	E - 3
048030-3-42	J -18
	I' -22
048040-3-42	D -66
048080-3-42	E -16
048150-1-43	D -67
071023-8-50	C -53
072600-0-00	B -42
072600-1-00	B -59
100025-0-02	D -73
100032-0-03	A -63
	B -79
100080-0-02	P - 3
100080-0-04	E -64
	I - 5
	I' - 1
	J - 1
	J' - 2
	K - 5
	K' - 1

Parts No.	Ref. No.
100080-0-04	L - 5
	M - 2
	M' - 3
	N - 7
	b - 4
	c - 3
	d - 3
	b' - 3
	c' - 3
	d' - 6
	e - 7
	e' - 7
	f - 4
	f' - 4
	g - 7
	g' - 7
	h - 7
	j - 5
	k - 9
	m -24
100105-0-05	E -66
	I - 9
	J' - 8
	K - 9
	L - 9
	M - 8
	M' - 7
	N -11
	K' - 3
	b -10
	c - 9
	d - 9
	b' - 9
	c' - 9
	d' -12
	e -11
	e' -11
	f -10
	f' -10
	g -11
	g' -11
	h -11
	j - 9
	k -13
	m -30
100136-0-01	P -15
100257-0-10	H - 5
100260-0-01	C -39
	E -36
100294-0-02	D -97
100366-0-01	B -22
	B -26
	B -33
	E -32
100444-0-02	P - 2
100447-0-01	P - 7
100463-0-01	P -24
	P -32
10118-0-01	P -17
101572-1-01	Y -12
101706-0-01	A -72
	D -30
	D -43
	G -24
	K -21
	K -23
	L -21
	L -23
	g -26
	g -28
	g' -28
	g' -30

Parts No.	Ref. No.
101706-0-01	h -26
	h -28
	n -17
	n -19
102538-0-02	D - 3
102627-0-01	E -51
102843-0-04	A - 8
103978-0-02	n -74
104619-0-02	P -33
104890-0-02	P -21
	P -30
105034-0-03	C - 4
	C -33
105078-0-01	B - 8
105079-0-01	B -10
105163-0-01	K -39
	L -39
	g -44
	g' -46
	h -44
	n -30
105216-0-01	b -15
	c -14
	d -14
	b' -14
	c' -14
	d' -17
	e -16
	e' -16
	f -15
	f' -15
	g -19
	g' -19
	h -19
	j -14
	k -18
	m -34
	n -58
105230-0-01	N -21
	m -21
105234-0-03	K -24
	L -24
	g -29
	g -31
	h -29
	n -22
105248-0-01	F - 9
105343-0-01	Y - 3
106568-0-03	D -108
107093-0-02	D -82
107231-0-02	E -73
107244-0-01	B -62
107351-0-01	B -81
107407-0-03	A -40
	D -57
	D -59
	E -41
	E -57
107779-0-01	Y - 8
108494-0-01	P -13
108495-0-01	P -14
108960-0-02	A - 3
109203-0-01	A -44
	D -100
109852-0-01	P - 4
109853-0-01	P - 1
110087-0-01	P -35
110161-0-03	P - 6
110161-0-06	E -25
110201-0-01	M -15
	J' -11
110230-0-01	K -25

Parts No.	Ref. No.
110230-0-01	L -25
	g -30
	g' -32
	h -30
	n -23
110641-0-01	A -43
110668-0-01	B -50
110670-0-00	B -58
110672-0-00	B -60
110673-0-00	B -61
110704-0-01	C - 5
	C -34
110735-0-02	L -55
	h -68
	n -13
110793-0-01	E -19
110813-0-01	F -32
	b -29
	c -25
	d -27
	b' -25
	c' -27
	d' -50
	e -44
	e' -44
	f -42
	f' -42
	g -65
	g' -68
	h -67
	j -25
	k -46
	n -49
110820-0-01	F -12
	F -31
	K -31
	L -31
	a - 4
	g -36
	g' -38
	h -36
	n -29
110832-0-01	F -13
	F -30
	a - 5
111443-0-01	I' -20
	J -14
111486-0-01	A -70
	B -77
111865-0-01	A -28
112299-0-01	F - 3
112300-0-01	F - 2
112301-0-01	F - 4
	Q - 5
	n -11
112348-0-01	G - 1
	G - 8
	G -11
	G -13
	G -17
	H - 7
	H -11
	H -14
	H -19
112359-0-01	G -18
	H - 9
	H -10
	H -13
	H -18
112364-0-01	G - 2
	G - 7
	G -10
	G -15

Parts No.	Ref. No.
112436-0-01	E -44
	Y -34
112735-0-00	D -35
112751-0-02	K -50
	L -50
	g -55
	g' -57
	h -55
113431-0-02	A -65
	D -21
	D -56
	D -58
	H -20
	Z - 6
113589-0-01	A -17
114255-0-02	B -19
114294-0-01	B -45
114483-0-02	Y -37
114966-0-01	P -36
114967-0-01	P -34
117160-0-01	A -31
117466-0-00	Y -13
117515-0-01	E -46
117516-0-01	D -50
	D -54
	E -47
117517-0-03	D -86
118837-0-01	Y -11
122771-0-02	F -39
122991-0-02	Y - 1
123185-0-01	A -33
140063-0-01	D -99
140066-0-01	A -79
140077-0-01	A -54
140084-0-00	B -53
140088-0-01	B -25
140092-0-01	B -21
	B -32
140093-0-00	B -20
140096-0-01	B - 4
140165-0-01	D -79
140176-0-01	D -85
140180-0-01	B -54
140187-0-00	D - 2
140188-0-04	D - 1
140205-0-01	D -18
140207-0-01	D -44
140208-0-01	D -40
	D -46
140209-0-01	D -45
140210-0-01	D -47
140217-0-01	D -39
140232-0-01	E -30
140233-0-01	E -31
140235-0-00	E -37
140248-0-01	E -55
140261-0-01	E -14
140262-0-00	E -17
140263-0-00	E -12
140317-0-00	C -20
	E -27
140320-0-00	B -24
140325-0-01	G - 4
140326-0-01	B - 6
	C -28
	D - 9
140327-0-01	B -23
	C - 9
	C -42
	D - 5
140342-0-01	Y - 2
140415-0-00	B - 9
140416-0-00	C -46

Parts No.	Ref. No.
140416-0-00	I -27
	N -29
	d' -43
	e -32
	e' -32
	f -36
	f' -36
	k -34
140417-0-00	C -50
140418-0-00	B - 5
140421-0-01	A -81
140503-0-01	P -37
140504-0-01	E -68
140759-0-00	Y -32
140778-0-01	G -12
140779-0-01	G - 9
140780-0-01	G - 6
140888-0-01	Y -35
141183-0-00	A -74
141514-0-01	N - 2
	N -25
	Q - 1
	Q - 2
	Q -13
	m - 2
	m -40
	n - 5
	n - 7
	n - 8
141544-0-01	N - 9
	m - 9
142125-0-00	Y -14
142201-0-01	M -12
	I' - 9
142262-0-01	Y -26
142274-0-01	B -43
142343-0-01	Y -36
142669-0-01	F -38
143179-0-00	B -48, 49
143311-0-01	B -40
143312-0-00	B -41
143323-1-03	E -21
143325-0-01	E -22
143374-0-01	A -75
143564-0-01	D -22
143565-0-01	D -20
143566-0-01	Y - 7
143750-0-02	P -16
143757-0-01	F - 5
143767-0-02	P - 8～16
143976-0-01	P -11, 12
143978-0-01	P - 9, 10
143980-0-01	P - 8
143989-0-01	P -25
	P -31
143992-0-01	A - 5
144025-0-01	C -30～32
144029-0-00	C -37
144031-0-00	C -41
144044-0-01	C - 1～ 3
144049-0-01	C -19
144053-0-01	D -71, 71
144055-0-01	D -69
144068-0-01	I -16
	N -18
	d' -22
	e -21
	e' -21
	k -23
144073-0-01	E -40
144074-0-00	E -42

Parts No.	Ref. No.
144075-0-01	E -43
144079-0-01	E - 7
144081-0-01	E - 9
144083-0-01	E - 4
144084-0-01	E - 2
144085-0-01	E - 5
144086-0-01	E - 6
144088-0-01	E -72
	J' -13
	M -17
144091-0-01	K - 7
	L - 7
	g - 9
	g' - 9
	h - 9
144100-0-01	K -10
	L -10
	g -12
	g' -12
	h -12
144103-0-02	F -15
	F -28
	a - 7
144104-0-01	F -16
	b -28
	c -24
	d -26
	b' -24
	c' -26
	d' -49
	e -43
	e' -43
	f -41
	f' -41
	g -64
	g' -67
	h -66
	j -24
	k -45
	m -47
	n -48
144105-0-00	F -17
	F -25
	K -28
	L -28
	N -20
	a - 9
	g -33
	g' -35
	h -33
	m -20
	n -26
144108-0-01	F - 8
144110-0-01	F -27
144111-0-01	F -21
144116-0-00	H - 4
	b -21
	d -26
144117-0-00	E -28
144124-0-01	Y - 9
144127-0-01	C -17
144622-0-01	G -22
144764-0-01	K -36
	L -36
	g -41
	g' -43
	h -41
	n -36
144783-0-01	K -16
	L -16
	g -21
	g' -23
	h -21

Parts No.	Ref. No.
144784-0-01	K -17
	L -17
	g -22
	g' -24
	h -22
144788-0-01	K -29
	L -29
	g -34
	g' -36
	h -34
	n -27
144793-0-00	K -49
	L -49
	g -54
	g' -56
	h -54
144803-0-01	P -19
144804-0-01	P -22
144805-0-01	P -26
144806-0-01	P -23
144811-0-01	K - 5～11
144813-0-01	K - 8
	L - 8
144815-0-01	g - 7～13
	g' - 7～13
144816-0-01	g -10
	g' -10
	h -10
145277-1-04	Y -38
145446-0-01	F -14
	F -29
	a - 6
145663-0-01	D -74
145664-0-00	A -51
145774-0-01	I -10
	M - 8
	N -12
	e -12
	e' -12
	j -10
	k -14
145803-0-01	K -19
	L -19
	g -24
	g' -26
	h -24
145807-0-01	K -43
	L -43
	g -48
	g' -50
	h -48
145808-0-01	K -41
	L -41
	g -46
	g' -48
	h -46
	n -38
145809-0-01	K -51
	L -51
	g -56
	g' -58
	h -56
	n -46
145811-0-01	K -33
	L -33
	g -38
	g' -41
	h -38
146315-0-00	A -22
	A -71
146401-0-01	D -80
146402-0-01	D -75
146403-0-01	D -77

Parts No.	Ref. No.
146404-0-01	D -76
146405-0-01	D -72
146419-0-01	A -14
146420-0-00	A -15
146421-0-00	A -16
146422-0-01	A - 2
146425-0-01	A -11
146426-0-00	A -10
146427-0-01	A - 9
	b - 2
	c - 2
	d - 2
	b' - 2
	c' - 2
	d' - 4
	e - 5
	e' - 5
	f - 2
	f' - 2
	g - 6
	g' - 6
	h - 6
	j - 2
	k - 7
	m -37
	n -64
146428-0-01	A - 7
146430-0-01	K - 1
	L - 1
	g - 1
	g' - 1
	h - 1
146432-0-01	A -12
146433-0-00	A - 6
146436-0-01	A -48
146440-0-01	A -36
	K -55
	L -58
	b -24
	c -20
	d -22
	b' -19
	c' -21
	d' -29
	e -39
	e' -39
	f -22
	f' -22
	g -60
	g' -63
	h -62
	j -20
	k -41
	m -43
	n -53
146441-0-00	A -39
	K -56
	L -59
	b -25
	c -21
	d -23
	b' -20
	c' -22
	d' -30
	e -40
	e' -40
	f -23
	f' -23
	g -61
	g' -64
	h -63
	j -21

Parts No.	Ref. No.
146441-0-00	k -42
	m -44
	n -55
146442-0-01	A -37
	K -54
	L -57
	b -23
	c -19
	d -21
	b' -18
	c' -20
	d' -28
	e -38
	e' -38
	f -21
	f' -21
	g -59
	g' -62
	h -61
	j -19
	k -40
	m -42
	n -51
146446-0-01	A -32
146448-0-01	A -62
146449-0-01	A -56
146450-0-01	A -58
146451-0-01	B -67
146452-0-01	B -68
146453-0-01	B -69
146454-0-01	B -66
146457-0-01	A -52
146458-0-02	A -46
146460-0-01	A -60
146461-0-01	A - 4
146473-0-01	B -46, 47
146476-1-01	B -25～29
146478-0-01	B -27
146479-0-01	B -31
146480-0-01	B - 1～ 4
146481-0-01	B - 2
146482-0-01	B - 3
146483-0-01	a - 1
146484-0-01	B -18
146485-0-01	B -16
146486-0-00	B -15
146494-0-01	B -76
146495-0-01	B -75
146511-0-00	H -16, 17
146512-0-00	H -12
146515-0-00	H - 8
146516-0-00	H - 6
146521-0-01	E - 8
146522-0-01	E -23
146523-0-01	E -18
146524-0-01	E -15
146525-0-01	E -10
146526-0-01	n -65
146527-0-01	E -74
146528-0-01	D -67～86
146529-0-01	D -68
146530-0-01	D -83
146531-0-01	D -84
146532-0-01	D -11
146533-0-01	D - 7
146534-0-01	D -64
146535-0-01	D -65
146536-0-01	D -63
146537-0-00	D -62
146538-0-01	D - 4
146539-0-00	D - 6
146540-0-00	D -23

Parts No.	Ref. No.
146541-0-01	D-26, 28, 48
146542-0-01	D -28
146543-0-01	D -26
146544-0-00	D -48
146547-0-00	D -27
146548-0-01	D -31
146549-0-01	D -25
146550-0-01	D -12～16
146554-0-01	D -36
146555-0-01	D -41
146556-0-01	D -103
146558-0-01	D -95
146559-0-01	D -98
146560-0-01	D -96
146561-0-01	D -91
146562-0-01	K - 2
	L - 2
	g - 2
	g' - 2
	h - 2
146563-0-01	D -88
146564-0-01	D -93
146565-0-01	D -94
146566-0-01	D -92
146577-0-01	D -51
146578-0-01	I -14
	K -14
	N -16
	d' -20
	e -19
	e' -19
	g -16
	g' -16
	k -21
146580-0-01	E -38
146581-0-01	E -35
	C -38
146582-0-01	E -50
146584-0-01	E -53
146585-0-01	E -48
146586-0-01	E -54
146587-0-02	K -16～47
	L -16～47
	g -21～52
	g' -23～54
	h -21～52
146592-0-01	K -46
	L -46
	g -51
	g' -53
	h -51
146593-0-01	P -28
146594-0-01	P -27
146596-0-01	J' -19
	M -23
146597-0-01	J' -16
	M -20
146598-0-01	J' -15
	M -19
146599-0-01	J' -12
	M -16
146602-0-01	C -40
146603-1-01	C -21～27, 44～49
146611-1-01	I -17～29
	N -19～31
	d' -33～45
	e -22～34
	e' -22～34
	f -26～38
	f' -26～38
	k -24～36
146614-0-01	C -10

Parts No.	Ref. No.
146615-0-00	C - 8
146616-0-00	C -13
146617-0-01	C -15
146636-0-01	G - 3
146644-0-00	B -36
146645-0-01	B -35
146647-0-01	B -51
146648-0-01	F -19
146649-0-01	F -11
146652-0-01	F -33
146653-0-01	F -34
146654-0-01	F -36
146700-0-01	Y -10
146704-0-01	A -77
146705-0-00	A -78
146706-0-01	I - 1
	N - 1
	d' - 1
	e - 1
	e' - 1
	k - 1
146708-0-00	A -68
146709-0-00	A -67
146710-0-01	K -53～58
	L -56～61
146712-0-01	A -42
146713-0-01	A -29, 30
146716-0-01	J -24
	I' -28
	n -76
146717-1-01	A -64
146718-0-01	A -34
146719-0-01	I' - 8
	M -11
146724-0-01	B -44
146725-0-01	B -70
146726-0-01	B -64
146730-0-01	B -80
	J -23
	I' -27
146731-0-01	B -80
	J -23
	I' -27
	M -27
	J' -22
146732-0-01	B -80
	J -23
	M -27
	M -11
146733-0-01	B -80
146734-0-01	I -12
146735-0-01	I -12
	N -14
146736-0-01	I -12
146737-0-01	K -12
	L -12
146738-0-00	H - 1～ 4
146739-0-00	H - 3
146740-0-00	H - 1
	b -18
	d' -23
146741-0-00	D -42
146742-0-01	I - 2
	N - 2
	d' - 2
	e - 2
	e' - 2
	k - 2
146744-0-01	D -49
146745-0-01	I -13
	N -15

Parts No.	Ref. No.
146745-0-01	e -17
	e' -17
	k -19
146746-0-01	K -13
	g -15
	g' -15
146748-0-01	D -53
146749-0-01	d -17
	b' -16
	c -17
	c' -16
	j -17
146750-0-01	I -15
	N -17
	e -18
	e' -18
	k -20
146751-0-01	K -15
	L -15
	g -17
	g' -17
	h -17
146754-0-01	E -45
146759-0-01	J -16
	I' -23
146760-0-01	J -21
	I' -25
146761-0-01	J' -12～20
	M -16～24
146762-0-01	J' -18
	M -22
146763-0-01	g -58～63
	g' -61～66
	h -60～65
	n -50～55
146765-0-01	a -12
146771-0-01	b - 1, 2
	d' - 3, 4
146773-0-01	c - 1, 2
	d - 1, 2
	e - 4, 5
	e' - 4, 5
	g - 5, 6
	g' - 5, 6
	h - 5, 6
	j - 1, 2
	k - 6, 7
	m -36, 37
	n -63, 64
146775-0-01	b' - 1, 2
	c' - 1, 2
	f - 1, 2
	f' - 1, 2
146777-0-01	b -16
	c -15
	d -16
	d' -18
	e -20
	e' -20
	g -20
	g' -20
	h -20
	j -15
	k -22
	m -35
	n -56
146778-0-01	b' -15
	c' -15
	f -16
	f' -16
146779-0-01	b -13

Parts No.	Ref. No.
146779-0-01	d' -15
146780-0-01	d' -15
146781-0-01	c -12
	d -12
	e -14
	e' -14
	j -12
	k -16
146782-0-01	c -12
	d -12
	e -14
	e' -14
	k -16
146783-0-01	e -14
	e' -14
	k -16
146785-0-01	f -13
	f' -13
146786-0-01	g -14
	g' -14
	h -14
146787-0-01	b -14
	c -13
	d -13
	d' -16
	e -15
	e' -15
	g -18
	g' -18
	h -18
	j -13
	k -17
	m -33
	n -57
146788-0-01	b' -13
	c' -13
	f -14
	f' -14
146789-0-01	E -67
146790-0-01	f -18
	f' -18
146791-0-01	f -19
	f' -19
146793-0-01	a - 2
146883-0-01	M - 1
	N - 4
	j - 3
	k - 4
146884-0-01	E -58～66
146886-0-01	E -61
146887-0-01	E -62
	I - 7
	J - 3
	I' - 3
	J' - 4
	M - 4
	M' 5
	N - 9
	K' 4
	b - 6
	c - 5
	d - 5
	b' - 5
	c' - 5
	d' - 8
	e - 9
	e' - 9
	f - 6
	f' - 6
	j - 7
	k -11
	m -26

Parts No.	Ref. No.
146888-0-01	E -59
	J' - 7
	M - 7
	K' - 8
	b - 9
	c - 8
	d - 8
	b' - 8
	c' - 8
	d' -11
	f - 9
	f' - 9
	m -29
146889-0-01	E -65
	M - 9
	K' - 7
	b -11
	c -10
	d -10
	b' -10
	c' -10
	d' -13
	f -11
	f' -11
	m -31
146890-0-01	J - 1～ 5
	I' - 1～ 5
146892-0-01	J - 4
	I' - 4
146893-0-01	M - 2～10
	J' - 2～10
146894-0-01	M - 5
	J' - 5
146895-0-01	M' 3～ 9
	N - 7～13
146897-0-01	M' 6
	N -10
146898-0-01	I - 5～11
146900-0-01	I - 8
146902-0-01	c - 3～11
	d - 3～11
	m -24～32
146903-0-01	c - 6
	d - 6
	m -27
146904-0-01	e - 7～13
	e' - 7～13
146905-0-01	e -10
	e' -10
146906-0-01	j - 5～11
	k - 9～15
146907-0-01	j - 8
	k -12
146914-0-01	D -101, 102
146924-0-00	A -30
146926-0-01	F -22
146929-0-01	F -40
146963-0-01	b - 4～12
	d' - 6～14
146964-0-01	b - 7
	d' - 9
146965-0-01	b' - 3～11
	c' - 3～11
	f - 4～12
	f' - 4～12
146966-0-01	b - 6
	c - 6
	f - 7
	f' - 7
146974-0-01	A -20
146974-0-02	A -20
146974-0-03	A -20
146974-0-04	I - 3
146974-0-05	I - 3

Parts No.	Ref. No.
146974-0-06	I - 3
146974-0-07	J - 7
146974-0-08	J - 7
146974-0-09	J - 7
146974-0-10	I' - 7
146974-0-11	I' - 7
146974-0-14	M-25
146974-0-15	M-25
146974-0-17	J' -21
146974-0-19	K - 4
146974-0-20	L - 4
146974-0-21	M-10
146974-0-25	N - 3
146974-0-42	N'-26
146974-0-43	N'-26
146974-0-44	N'-26
146974-0-54	A -20
146974-0-56	K'-13
146974-0-58	N'-26
146975-0-04	c -16
146975-0-05	c -16
146975-0-10	c' -25
146975-0-12	d' -48
146975-0-13	d' -48
146975-0-15	e - 3
146975-0-16	e' - 3
146975-0-17	f -17
146975-0-18	f' -17
146975-0-19	g - 4
146975-0-20	g' - 4
146975-0-21	h - 4
146975-0-23	j -16
146975-0-31	k - 3
146975-0-32	k - 3
146975-0-33	k - 3
146975-0-39	b -17
146975-0-41	e - 3
146975-0-62	e - 3
146975-0-63	e' - 3
146975-0-64	b' -23
146975-0-65	d -15
146975-0-66	m-23
146975-0-67	m-23
146975-0-68	d' -48
146975-0-69	e' - 3
146975-0-72	n -75
146975-0-81	p - 3
146975-0-82	p - 3
147049-0-01	a -13
147049-0-02	F -43
147049-0-03	F -42
147049-0-04	F -45
147148-0-01	N'-18
	m-18
147211-0-01	G -16
147217-0-00	D -34
147318-0-00	D -10
	G -14
147344-0-01	F - 1
147361-0-00	A -50
147362-0-00	D -33
147363-0-00	D -17
147415-0-02	B' -82
147433-0-01	L - 5～11
147439-0-01	h - 7～13
147440-0-00	L -53
	h -58
147449-0-01	N' - 7
147450-0-01	N' - 7
147451-0-01	N' - 7
147452-0-01	N' - 7
147454-0-01	N' - 6
	Q - 9
	m - 6

Parts No.	Ref. No.
147454-0-01	n - 1
147473-0-01	N'-10～21
	m-10～21
147476-0-01	N'-14
	m-17
147477-0-01	N'-12
	m-12
147478-0-01	N'-15
	m-14
147479-0-01	N'-19
	m-19
147480-0-01	N' - 1
	m - 1
147483-0-01	N'-24
147484-0-01	N' - 8
	m - 7
147485-0-01	N'-23
147521-0-01	G -19～33
147522-0-00	G -25
147523-0-01	G -26～29
147527-0-01	G -30
147528-0-00	G -31
147529-0-00	G -32
147629-0-01	B -12, 13
147631-0-01	B -13
147672-0-01	N - 4
	Q -11
	m - 4
	n - 3
147698-0-02	Y -25
147710-0-01	J - 8～21
	I' -12～25
147712-0-01	J -17
	I' -21
147713-0-01	J -15
	I' -19
147738-0-00	H - 2
	b -19
	d' -24
147759-0-01	E - 1
147773-0-01	D -26, 28
147828-0-01	L -13
	h -15
147832-0-01	L -14
	h -16
147848-0-02	B -56
147919-0-01	Z -13
147919-0-02	Z -14
147933-0-01	K -32
	L -32
	g -37
	g' -39
	h -37
147934-0-01	C -51, 52
147935-0-01	I' -10, 11
	M-13, 14
147936-0-01	c' -17, 18
	d -18, 19
	g' -21, 22
	f' -39～40
147937-0-01	I -30, 31
	N -32, 33
	d' -46, 47
	e -35, 36
	e' -35, 36
	f -39, 40
	k -37, 38
147943-0-01	A -101
148008-0-00	b -18～21
	d' -23～26
148009-0-00	b -20
	d' -25

Parts No.	Ref. No.
148030-0-01	b' -12
148031-0-01	c' -12
148033-0-01	C -43
148034-0-01	C -54
148042-0-01	Z - 5
148084-0-01	A -25
148174-0-00	D -55
148281-0-01	E -39
148294-0-01	C -47
	C -55
	I -26
	N -28
	d' -42
	e -31
	e' -31
	f -35
	f' -35
	k -33
148311-1-01	K' - 1～ 9
148313-0-01	K' - 5
148314-0-01	K'-10～12
148348-0-01	Z - 4～ 7
148352-0-01	K'-10～12
148354-0-01	K'-11
148355-0-01	K'-12
148366-0-01	m - 8
148367-0-01	m - 8
148369-0-01	N' - 5
	Q -10
	m - 5
	n - 2
148370-0-01	m-38
148371-0-01	m-39
148372-0-01	E -20
148387-0-01	Q - 7
	n -18
148388-0-01	Q - 3
	n - 9
148389-0-01	Q - 6
	n -12
148390-0-01	Q - 4
	n -10
148391-0-01	Q -12
	n - 4
148395-0-01	Q - 2～ 6
	n - 8～12
148401-0-01	d' -19
148402-0-01	d' -21
148425-0-01	B -29
	C - 1
	C -30
	E -34
148427-0-01	E -30～34
148428-0-00	E -33
148430-0-01	Y -16
148431-0-01	Y -19
148432-0-01	Y -20
148447-0-00	Z -12
148782-0-01	C -56
148832-0-01	d' -15
148834-0-01	D -105
148925-0-01	K'-14
148984-0-01	A -83
	K -58
	L -61
	b -27
	c -23
	d -25
	b' -22
	c' -24
	d' -32

Parts No.	Ref. No.
148984-0-01	e -42
	e' -42
	f -25
	f' -25
	g -63
	g' -66
	h -65
	j -23
	k -44
	m-46
	n -52
148991-0-01	A-35～39, 83
148993-0-01	b -22～27
	c -18～23
	d -20～25
	b' -17～22
	c' -19～24
	d' -27～32
	e -37～42
	e' -37～42
	j -18～23
	k -39～44
	m-41～46
148995-0-01	f -20～25
	f' -20～25
149170-0-01	C -44
	I -24
	N -26
	d' -40
	e -29
	e' -29
	f -33
	f' -33
	k -31
149171-0-01	C -14
149173-0-01	Y - 6
149183-0-01	n -69
149197-0-01	n -62
149193-0-01	n -61
149194-0-01	n -59
149195-1-01	n -67～74
149197-0-00	n -14
149202-0-01	n -16～44
149203-0-01	n -20
149566-0-02	K -27
	L -27
	g -32
	g' -34
	h -32
	n -25
149886-0-00	D -106
149887-0-01	D -107
149888-0-00	D -60
150160-0-02	Z -15
150161-0-02	Z - 1
150339-0-01	J -12
	I' -16
150553-0-02	K -47
	L -47
	g -52
	g' -54
	h -52
	n -44
150556-0-02	K -52
	L -52
	g -57
	g' -60
	h -57
	n -47
150739-0-01	n -70
150867-0-01	p - 4

Parts No.	Ref. No.
150868-0-01	p - 4
150869-0-01	p -15～23
150871-0-01	p -18
150872-0-01	p -23
150873-0-01	p -10
151017-0-01	Z - 1～ 3
151059-0-01	A -27
151060-0-00	A -45
151173-0-01	J - 9～12
	I' -13～16
151200-0-11	B -14
151200-0-14	I - 4
151200-0-09	J - 6
151200-0-09	I' - 6
151200-0-14	J' - 1
151200-0-14	M- 1
151200-0-14	N - 6
151200-	Y -22
151200-0-14	e - 6
151200-0-14	e' - 6
151200-0-19	f - 3
151200-0-19	f' - 3
151200-0-14	k - 8
151201-0-01	a -10, 13
151201-0-02	F -24, 43
151201-0-03	F -18, 42
151201-0-04	F -44, 45
151206-0-11	b - 3
	d' - 5
180323-0-01	C -11, 12
180814-0-01	P -31～37
181031-0-01	P - 1～ 7
181969-0-03	A -72, 73
	D -29, 30
181995-0-02	G -23, 24
	K -22, 23
	L -22, 23
	g -27, 28
	g' -29, 30
	h -27, 28
210973-0-01	Z - 8
508693-0-01	G -35
147952-0-01	e - 7～13
	e' - 7～13
148120-0-00	B -34
150307-0-00	B -37
151224-0-01	P -18～37
151227-0-02	Q - 1～14
146732-0-01	J' -22
146736-0-01	N -14
152186-0-21	f - 3
	f' - 3

Parts No.	Ref. No.	Parts No.	Ref. No.
001670-5-12	h'-40		
009660-7-12	h'-23		
009680-6-12	h'-39		
	h'-45		
	h'-59		
009680-8-12	h'-49		
009781-8-12	h'-53		
013679-4-12	h'-50		
014680-4-22	h'-70		
025030-1-32	h'- 8		
025770-2-32	h'-35		
047140-8-42	h'-64		
100080-0-04	h'- 7		
100105-0-05	h'-11		
101706-0-01	h'-26		
	h'-28		
105163-0-01	h'-44		
105216-0-01	h'-19		
105234-0-03	h'-29		
110230-0-01	h'-30		
110735-0-02	h'-68		
110813-0-01	h'-67		
110820-0-01	h'-36		
112751-0-02	h'-55		
144091-0-01	h'- 9		
144100-0-01	h'-12		
144104-0-01	h'-66		
144105-0-00	h'-33		
144764-0-01	h'-41		
144783-0-01	h'-21		
144784-0-01	h'-22		
144788-0-01	h'-34		
144793-0-00	h'-54		
144816-0-01	h'-10		
145803-0-01	h'-24		
145807-0-01	h'-48		
145808-0-01	h'-46		
145809-0-01	h'-56		
145811-0-01	h'-38		
146427-0-01	h'- 6		
146430-0-01	h'- 1		
146440-0-01	h'-62		
146441-0-00	h'-63		
146442-0-01	h'-61		
146562-0-01	h'- 2		
146587-0-02	h'-21～52		
146592-0-01	h'-51		
146751-0-01	h'-17		
146763-0-01	h'-60～65		
146773-0-01	h'- 5, 6		
146777-0-01	h'-20		
146786-0-01	h'-14		
146787-0-01	h'-18		
146975-0-22	h'- 4		
147439-0-01	h'- 7～13		
147440-0-00	h'-58		
147828-0-01	h'-15		
147832-0-01	h'-16		
147933-0-01	h'-37		
147936-0-01	h'-69, 70		
148984-0-01	h'-65		
149566-0-02	h'-32		
150553-0-02	h'-52		
150556-0-02	h'-57		
181995-0-02	h'-27, 28		