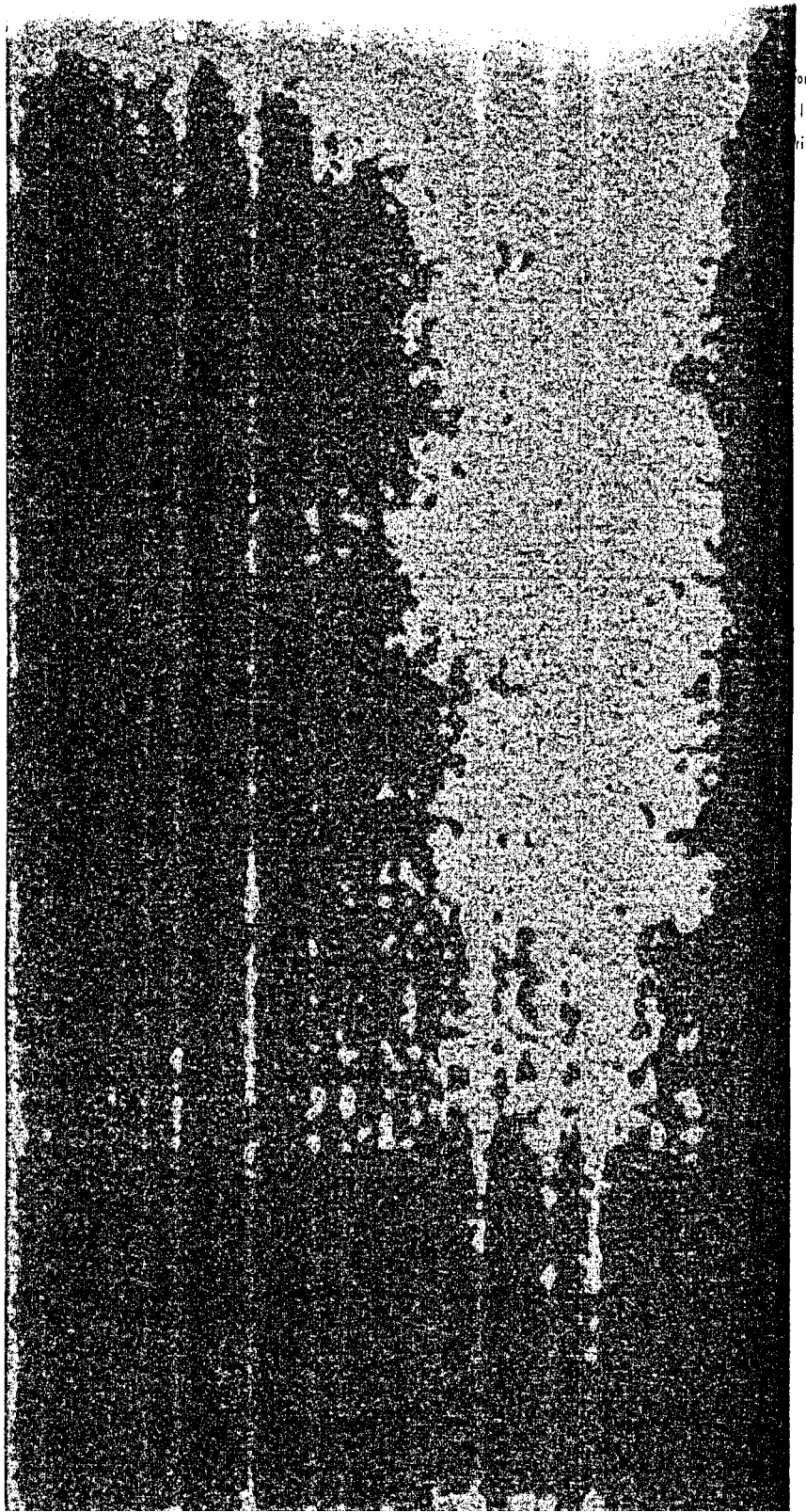

orm 19757
1041)
rinted in U. S. A.

HISTORICAL COPY
DO NOT REMOVE

LIST
OF
PARTS

MACHINE No. 58-16

THE SINGER MANUFACTURING COMPANY

INSTRUCTIONS FOR OILING

When the machine is received from the factory,it should be thoroughly cleaned and oiled.

At least twice each day, when in continuous use, apply oil to all oil holes and parts inside and outside the arm which are in movable contact.

Use "Singer Oil for High Speed Sewing Machines"(Cloth and Leather) for general use, or "Singer Stainless Oil for High Speed Sewing Machines" where a stainless oil is desired.

Copyright, U. S. A., 1939, 1940 and 1941
by The Singer Manufacturing Co.
All Rights Reserved for all Countries

INDEX

	Page
Accessories	15
Bobbin Winder	15
Foot Lifter and Starting Treadle Parts	16
Machine No. 58-16	7
Numerical List of Parts	19
Table Chain Guide Parts	16
Thread Cutting Treadle Parts	17
Thread Unwinder	17

INSTRUCTIONS FOR ORDERING

In ordering from this list, use ONLY the part NUMBER in the FIRST column.

The number stamped on a Sewing Machine Part is in every case the number of the single part only.

Every combination of parts sent out as such has its specific number, which, although not stamped on the parts, must be used when ordering the combination.

Each number always indicates the SAME PART in whatever list it appears, or for whatever machine.

The letters after some of the numbers indicate the style of finish only, as follows:

A-Hardened, Polished, Nickel Plated and Buffed
A.A-Buffed and Chromium Plated
A.B-Hardened, Polished, Buffed and Chromium Plated
A.C-Brown Baking Enamel Finish
A.D-Gray Baking Enamel Finish
A.E-Hardened, Bright Rumbled and Nickel Plated
A.F-Hardened, Bright Rumbled, Nickel Plated, Bright Rumbled and Chromium Plated
A.G-Alumilite, Plain
A.H-Alumilite, Dyed
A.J-Polished, Nickel Plated and Chromium Plated
A.K-Hardened, Polished, Nickel Plated and Chromium Plated
A.L-Heat Treated for Toughness
B-Polished, Nickel Plated and Buffed
C-Hardened Only
C.R-Hardened and Merlized
D-Polished Only
E-Soft, Not Polished
F-Hardened and Polished
F.J-Hardened, Polished and Nickel Plated
G-Bright Rumbled and Nickel Plated
H-Blued
J-Nickel Plated Only
K-Hardened and Nickel Plated
L-Brass Plated
M-Oxidized
N-Japanned, Dull
P-Japanned, Bright
P.P-Wrinkle Finish
R-Merlized
S-Cadmium Plated
T-Copper Plated
T.A-Hardened, Polished, Copper and Nickel Plated and Buffed
T.B-Copper and Nickel Plated and Polished
T.J-Copper and Nickel Plated Only
T.K-Hardened, Copper and Nickel Plated
T.L-Copper and Brass Plated
T.M-Copper Plated and Oxidized

U-Zinc Plated
V-Silver Plated
W-Polished and Nickel Plated
X-Black Oxide, for Iron and Steel
X.C-Hardened and Black Oxide, for Iron or Steel
Y-Black Nickel Plated Only
Z-Chromium Plated
Z.A-Hardened,Polished,Nickel Plated,Buffed and Chromium Plated
Z.B-Polished, Nickel Plated, Buffed and Chromium Plated
Z.C-Hardened and Chromium Plated
Z.D-Polished and Chromium Plated
Z.G-Bright Rumbled, Nickel Plated, Bright Rumbled and Chromium Plated
Z.J-Nickel and Chromium Plated
Z.T-Copper and Chromium Plated

These letters MUST BE USED when they appear in the list; and AFTER the number as in the list.

In this series:

1 to 1500, 50001 to 51500 and 140001 to 142000 are Screw Numbers
1501 to 1800 and 51501 to 51800 are Nut Numbers
1801 to 2000 and 51801 to 52000 are Roller Numbers
2001 to 50000 and 52001 to 140000 and 142001 to 190000 are Sewing Machine Parts, 190001 and upward are numbers of Electrical Parts.

The figures in the second column refer only to the plates, illustrating the parts, and are NOT TO BE USED in ordering.

Parts marked with an asterisk (*) are furnished only when repairs are made at factory.

Genuine Singer Needles should be used in Singer Machines. These Needles and their Containers are marked with the Company's Trade Mark "SIMANCO." 1

Needles in Containers marked "For Singer Machines" are not Singer made needles. 2

FOR

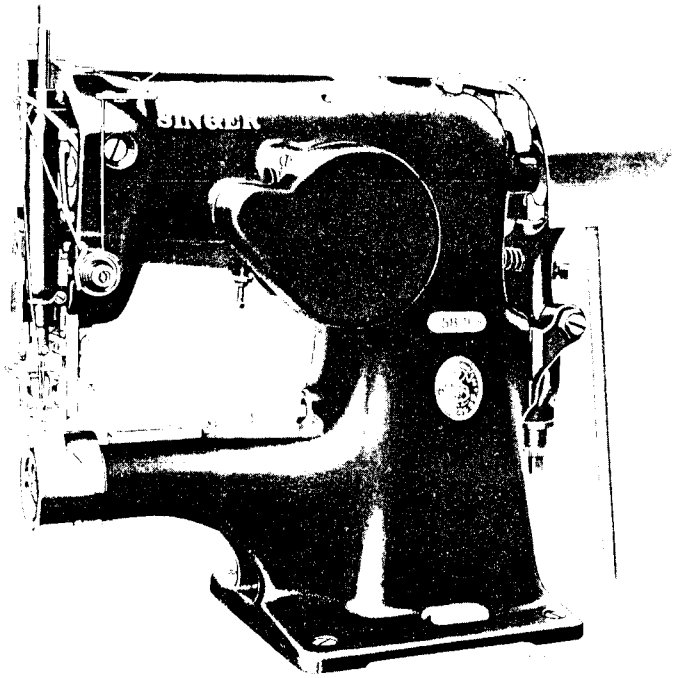

MACHINE No. 58-16

For Sewing Military Shank Buttons up to 1 3/16 inches Diameter on Clothing. Makes 14 stitches, including 3 fastening stitches and can be immediately adjusted to make 28 stitches, including the fastening stitches. Automatic thread cutter. Speed 1200 R. P. M.

No.	Plate	Name
*43766	-----	Arm and Cylinder with 15404 and two 15405
43677	1476	Arm Shaft
21634	1476	" " Flanged Bushing (back)
437C	1476	" " " " " Adjusting Screw
1517E	1476	Arm Shaft Flanged Bushing (back) Adjusting Screw Nut
448AL	1476	Arm Shaft Flanged Bushing (back) Set Screw
1069D	1476	Arm Shaft Screw
23373	1480	Belt Cover
43584	1480	" " Bracket with 871E and 43585
871E	1480	" " " Screw Stud

No.	Plate	Name
43585	1480	Belt Cover Bracket Stud
217J	1480	" " Screw (2)
43767	1477	Button Clamp (back)
43768	1477	" " (front)
50130C	1477	" " Hinge Screw (2)
43769	1477	" " Plate
43770	1477	" " Shank
43771	1477	" " Spreader
66045	1477	" " " Stop
190J	1477	" " " " Screw
19116	1477	" " Spring
111D	1477	" " " Screw (2)
793D	1477	" " Thumb Screw
7071	1477	" " " " Washer
43773	-----	Button Clamp complete, Nos. 190J, 793D, 7071,19116,43767 to 43771,66045 and two each 111D and 50130C
172F	1477	Button Clamp Screw
12108	1476	Crank Connecting Rod with two 158E
158E	1476	" " " Cap Screw (2)
375C	1476	" " " Hinge Screw
1518E	1476	" " " " " Nut
43774	1477	Needle Bar with 857AL
*3045	1476	" " Connecting Link
43726	-----	" " " " 3045 with 43644
377C	1476	" " " " Hinge Screw
1518E	1476	" " " " " " Nut
43644	1476	" " " Stud with 187E
187E	1476	" " " " Clamping Screw
43645	1477	" " Frame
66110	1476	" " " Cam with 448AL
43691	1477	" " " " Cover
158E	1477	" " " " " Screw (2)
23668	1476	" " " " Pin
448AL	1476	" " " " Set Screw
43692	1476	" " " " Shaft
43776	1476	" " " " Worm with 448AL and 50243C
50243C	1476	Needle Bar Frame Cam Worm Position Screw
448AL	1476	" " " " " Set Screw
43777	1476	" " " " " Wheel with 448AL and 50243C
50243C	1476	Needle Bar Frame Cam Worm Wheel Position Screw
448AL	1476	Needle Bar Frame Cam Worm Wheel Set Screw
43695	1477	Needle Bar Frame Driving Arm with 200C and 51803
2022	1477	Needle Bar Frame Driving Arm Pin
51803	1477	" " " " " Roller and Stud

No.	Plate	Name
200C	1477	Needle Bar Frame Driving Arm Set Screw
43696	1477	" " " " " Shaft
66077	-----	Needle Bar Frame Pitman complete, Nos. 1722E, 1723E and 66081 to 66083
43698	1477	Needle Bar Frame Pitman Arm
2022	1477	" " " " " Pin
679C	1477	" " " " Ball Screw Stud (arm end)
1520E	1477	Needle Bar Frame Pitman Ball Screw Stud (arm end) Nut
777C	1477	Needle Bar Frame Pitman Ball Screw Stud (frame end)
1518E	1477	Needle Bar Frame Pitman Ball Screw Stud (frame end) Nut
66081	1477	Needle Bar Frame Pitman Head (arm end) with 679C and two 171AL
66082	1477	Needle Bar Frame Pitman Head (frame end) with 777C and two 171AL
171AL	1477	Needle Bar Frame Pitman Head Cap Screw (4)
66083	1477	Needle Bar Frame Pitman Rod
1722E	1477	" " " " " Nut (left hand thread)
1723E	1477	Needle Bar Frame Pitman Rod Nut (right hand thread)
577C	1477	Needle Bar Frame Screw Center (lower)
1517E	1477	" " " " " " Nut
945F	1477	" " " " " (upper)
1517E	1477	" " " " " " Nut
21553	1477	" " " Thread Eyelet
219J	1477	" " " " " Screw
43778	1478	" Plate
691F	1478	" " Screw (large)
219F	1478	" " " (small)
43779	1478	" " Thread Guard
1161F	1478	" " " " Screw (2)
857AL	1477	" Set Screw
21630	1478	Oscillating Rock Shaft with 4784 and 12388
12388	1478	Oscillating Rock Shaft Hinge Pin
448AL	1478	" " " " " Set Screw
4784	1478	Oscillating Rock Shaft Oil Pad (felt)
21556	1479	" Shaft
21557	1479	" " Crank with 460AL and 1921
2049	1479	Oscillating Shaft Crank Pin
1921	1479	" " " Roller and Stud.
460AL	1479	" " " Set Screw
43780	1477	Presser Bar

No.	Plate	Name
43700	1477	Presser Bar Lifting Bracket with 448AL..
43781	1477	" " " " Guide Bar...
453AL	1477	" " " " " " Set Screw.....
448AL	1477	Presser Bar Lifting Bracket Set Screw...
43782	1478	" " " Lever with 141C and 1528E.....
141C	1478	Presser Bar Lifting Lever Adjusting Screw.....
1528E	1478	Presser Bar Lifting Lever Adjusting Screw Nut.....
65C	1478	Presser Bar Lifting Lever Hinge Screw...
20023	1477	" " Spring.....
11170	1477	" " " Washer.....
688J	1477	Pressure Regulating Thumb Screw.....
1648C	1477	" " " " Lock Nut
66085	1476	Pulley (loose).....
43650	1476	" (tight).....
43651	1476	Pulley (tight) complete, Nos. 871E,21615 to 21617,21647,21653,43650 and two 997E.....
23668	1476	Pulley (tight) Pin.....
43652	1476	Pulleys complete, Nos. 43651 and 66085..
2996	1479	Shuttle Bobbin.....
15140	1479	" " Case Latch.....
2973	1479	" " " " Lever.....
2974	1479	" " " " " Fulcrum Pin.....
2975	1479	Shuttle Bobbin Case Latch Spring.....
592E	1479	" " " " Stop Screw....
15141	1479	" " " Hinge, Nos.2973,2974 and 15140.....
43725	1479	Shuttle Bobbin Case complete, Nos. 591F, 592E, 2975, 15141 and 224842.....
21562	1479	Shuttle Body.....
591F	1479	" Tension Regulating Screw.....
224842	1479	" " Spring.....
43654	1479	Shuttle, 1 11/16 in. diam., Nos. 2996, 21562 and 43725.....
43745	1479	Shuttle Driver.....
2049	1479	" " Pin.....
43783	1479	" Race Body.....
43543	1479	" " Cap.....
662F	1479	" " " Screw.....
2523	1479	" " " Steady Pin.....
43784	1479	" " Ring.....
55439	1479	" " " Spring (2).....
1289D	1479	" " " " Screw (2).....
43785	1479	Shuttle Race (flexible) complete, Nos. 662F,2523,43543,43783,43784 and two each 1289D and 55439.....

No.	Plate	Name
171AL	1479	Shuttle Race Screw (2).....
66027	1481	Starting Lever with 641C and 51804.....
66028	1481	Starting Lever complete, Nos. 159F,913C, 1520E,1638E,21643,21649,21651,43583, 50454C, 66027, 66031, two each 190J, 640F and three 21645.....
43706	1478	Starting Lever Bell Crank with 1921.....
66029	1476	" " " " Cam with 448AL
23668	1476	" " " " " Pin.....
448AL	1476	" " " " " Set Screw.
66030	1476	" " " " " Tripping Point.....
190J	1476	Starting Lever Bell Crank Cam Tripping Point Screw (2).....
802D	1478	Starting Lever Bell Crank Hinge Screw...
1921	1478	" " " " Roller and Stud.....
21643	1481	Starting Lever Belt Shifter complete....
159F	1481	" " " " Set Screw...
21730	1481	" " Bracket.....
8582	1481	" " " Dowel Pin.....
123E	1481	" " " Screw.....
21645	1481	" " Cushion (rawhide) (3)...
640F	1481	" " " Screw (2).....
51804	1481	" " Roller and Stud.....
641C	1481	" " " " " Set Screw
564C	1481	" " Screw Center (2).....
58384	-----	" " " " 564C with 1508E (2).....
1508E	1481	Starting Lever Screw Center Nut (2)....
14174	1481	" " Spring.....
50454C	1481	" " Stop Screw.....
1520E	1481	" " " " Nut.....
66031	1481	" " Tripping Plate.....
190J	1481	" " " " Screw (2)
21647	1476	Stop Cam with 21652.....
43583	1481	" " Interlocking Rod.....
21649	1481	" " " " Guide with 1070C.....
1070C	1481	Stop Cam Interlocking Rod Guide Set Screw.....
21651	1481	Stop Cam Interlocking Rod Spring.....
913C	1481	" " " " " Regulating Thumb Screw.....
1638E	1481	Stop Cam Interlocking Rod Spring Regulating Thumb Screw Nut.....
21652	1476	Stop Cam Pin.....
21615	1476	" " Spring (long).....
21616	1476	" " " (short).....
21653	1476	" " " Cover.....

No.	Plate	Name
997E	1476	Stop Cam Spring Cover Screw (2).....
21617	1476	" " " Stop Block.....
871E	1476	" " " " " Screw.....
2102	1479	Tension Disc (2).....
1560C	1479	" Regulating Thumb Nut.....
43791	1477	" Releasing Arm with 1097E.....
190J	1477	" " " Screw.....
32572	1479	" " Disc.....
43709	1479	" " Pin.....
1097E	1477	" " " Stop Screw.....
50327C	1479	" Screw Stud.....
44141	-----	" " " 50327C with 1560C....
43756	1479	Tension complete, Nos. 2103, 7336, 8511, 32572, 43709, 44141 and two 2102....
2103	1479	Tension Spring.....
12149	1479	" Thread Guard.....
43792	1478	Thread (lower) Cutting Blade.....
43797	1478	" " " " Connection (bell crank end).....
43798	1478	Thread (lower) Cutting Blade Connection (holder end).....
43799	-----	Thread (lower) Cutting Blade Connection complete, Nos. 43797, 43798 and two 193D.....
43800	1478	Thread (lower) Cutting Blade Connection Bell Crank.....
66001	1478	Thread (lower) Cutting Blade Connection Bell Crank Connection.....
50130C	1478	Thread (lower) Cutting Blade Connection Bell Crank Connection Hinge Screw (2).....
50434C	1478	Thread (lower) Cutting Blade Connection Bell Crank Hinge Screw.....
50130C	1478	Thread (lower) Cutting Blade Connection Hinge Screw (2).....
193D	1478	Thread (lower) Cutting Blade Connection Screw (2).....
43793	1478	Thread (lower) Cutting Blade Holder.....
43794	1478	" " " " " Extension.....
43795	1478	Thread (lower) Cutting Blade Holder Guide.....
578D	1478	Thread (lower) Cutting Blade Holder Guide Screw (2).....
171AL	1478	Thread (lower) Cutting Blade Holder Screw.....
43796	1478	Thread (lower) Cutting Blade Holder Sleeve.....
757D	1478	Thread (lower) Cutting Blade Screw (2).
66004	1477	" (upper) Cutting Blade with 66014.

No.	Plate	Name
66005	1477	Thread (upper) Cutting Blade Cap.....
1329D	1477	" " " " " Screw (4).....
66006	1477	Thread (upper) Cutting Blade Holder.....
193D	1477	" " " " " Screw (2).....
66007	1477	Thread (upper) Cutting Blade Holder Slide with 66011.....
66047	1477	Thread (upper) Cutting Blade Holder Slide Bracket.....
19793	1477	Thread (upper) Cutting Blade Holder Slide Bracket Dowel Pin.....
389D	1477	Thread (upper) Cutting Blade Holder Slide Bracket Screw (left).....
50128D	1477	Thread (upper) Cutting Blade Holder Slide Bracket Screw (right).....
66009	1477	Thread (upper) Cutting Blade Holder Slide Connection with 66018.....
190J	1477	Thread (upper) Cutting Blade Holder Slide Connection Screw.....
50435D	1477	Thread (upper) Cutting Blade Holder Slide Screw (2).....
66010	1477	Thread (upper) Cutting Blade Holder Slide Spring.....
66011	1477	Thread (upper) Cutting Blade Holder Slide Spring Stud.....
66024	1477	Thread (upper) Cutting Blade Lever with 51820.....
50130C	1477	Thread (upper) Cutting Blade Lever Hinge Screw.....
51820	1477	Thread (upper) Cutting Blade Lever Roller and Stud.....
66014	1477	Thread (upper) Cutting Blade Stud.....
43719	1478	" Eyelet (side of arm).....
190J	1478	" " " " " Screw.....
66015	1477	" Guard.....
1423J	1477	" " Screw (2).....
21578	1476	" Take-up Cam with 446AL.....
3012	1476	" " " Pin.....
446AL	1476	" " " Set Screw.....
43673	1476	" " Lever with 76C and 1819..
76C	1476	" " " Hinge Screw.....
1819	1476	" " " Roller and Stud....
8511	1479	" " Spring.....
7336	1479	" " " Regulator.....
453AL	1479	" " " " Set Screw
66016	1477	" Wiper.....
66017	1477	" " Body.....
1207D	1477	" " " Hinge Screw.....
66018	1477	" " " Pin.....

No.	Plate	Name
66019	1477	Thread Wiper Bracket
219J	1477	" " " Screw (2)
665J	1477	" " Screw
*15404	-----	Trade Mark
15405	-----	" " Rivet (2)
66032	1478	Tripping Lever with 50302D
66033	1478	" " Bracket
146D	1478	" " " Screw
1196C	1478	" " Hinge Screw
66034	1478	" " Pin
50302D	1478	" " " Set Screw
66035	1478	" " Spring

Genuine Singer Needles should be used in Singer Machines. These Needles and their Containers are marked with the Company's Trade Mark "SIMANCO." 1

Needles in Containers marked "For Singer Machines" are not Singer made needles. 2

ACCESSORIES

No.	Plate	Name
51072E	1482	Bolt with 51581E, to secure machine to table (4)
51581E	1482	Bolt Nut (4)
6055	1482	" " Washer (4)
120346	1482	Oiler (copper plated) with 120347
120347	1482	" Spout, 8 1/2 in. long
11831	1482	Screw Driver (large)
26026	1482	" " (medium)
26485	1482	" " (small)
150617	1485	Shaft Driving Pulley (sectional,grooved) pressed steel, bulged type, rolled edge, 10 in. diam., 1 3/16 in. bore, with two 731N (not regularly furnished)
731N	1485	Shaft Driving Pulley Clamping Screw (2) (not regularly furnished)
8908	1482	Wrench for 1070
21654	1482	" " 1508 and 1638
10875	-----	" " 1517, 1518 and 1520
4822	1482	" " 1528

BOBBIN WINDER

(SWINGING AUTOMATIC, RIGHT HAND)

No.	Plate	Name
27540	1483	Base
15072	1483	Bobbin Position Pin
27302	1483	Frame
50356D	1483	" Hinge Screw
1620J	1483	" " " Nut
27303	-----	" Spring
27541	1483	Pulley
27538	1483	Spindle with 15072 and 41828
41828	1483	" Collar Pin
27306	1483	Spool Pin
11241	1483	" " Washer (cloth)
27307	1483	" Stand
27308	1483	Spool Stand complete, Nos. 418E, 1562J, 2106, 10141, 11241, 27306, 27307 and two each 2455 and wood screws 1 in. No. 10
27312	1483	Stop Latch
35D	1483	" " Hinge Screw

No.	Plate	Name
2455	1483	Tension Disc (2).....
1562J	1483	" Regulating Thumb Nut.....
418E	1483	" Screw Stud.....
10141	1483	" Spring.....
2106	1483	" Thread Guide.....
27647	1483	Bobbin Winder, Nos. 35D,1620J,27302, 27303,27312,27538,27540,27541,50356D and two wood screws 1 in. No. 7.....
27544	1483	Bobbin Winder (swinging automatic, right hand) complete, Nos. 27308 and 27647

FOOT LIFTER AND STARTING TREADLE PARTS

No.	Plate	Name
14372	1484	Foot Lifter and Starting Treadle.....
14373	1484	" " " " " Extension.....
50581R	1484	Foot Lifter and Starting Treadle Extension Screw.....
2718	1484	Foot Lifter and Starting Treadle Extension Screw Washer.....
17881	1484	Foot Lifter and Starting Treadle Shaft..
14374	1484	" " " " " Spring.
14375	1484	" " " " " Stand..
14376	1484	Foot Lifter and Starting Treadle complete, Nos. 2718, 14372 to 14375, 17881, 50581R and two wood screws 1 1/4 in. No. 12 F.H.....

TABLE CHAIN GUIDE PARTS

No.	Plate	Name
14229	1484	Bracket with 448AL.....
14230	1484	Pulley.....
126928	-----	" Shaft.....
14231	1484	" " 126928 with 858AL.....
858AL	1484	" " Plug Screw.....
448AL	1484	" " Set Screw.....
14232	1484	Table Chain Guide complete, Nos. 14229 to 14231 and four wood screws 1 1/4 No. 10, R.H.B.....

THREAD CUTTING TREADLE PARTS

No.	Plate	Name
13351	1484	Chain, length 46 in. to 55 in., with 56864 and 56865.....
		Note: When ordering No. 13351, state length required.
4879	1484	Chain Connecting Link.....
56864	1484	Chain Hook (large).....
56865	1484	" " (small).....
5667	1484	Foot Lever.....
5669	1484	" " Bracket.....
5671	1484	" " Hinge Pin.....
5672	1484	" " Lifting Spring.....
5668	1484	Foot Lever complete, Nos. 5667,5669,5671 and three wood screws 1 1/2 in.No.16

THREAD UNWINDER

FOR TWO SPOOLS OR TWO LARGE CONES OF THREAD

No.	Plate	Name
225257	22248	Spool Rest with 201018C.....
150203	22248	" " Cushion (felt).....
225388	22248	" " Rod.....
200383C	22248	" " " Set Screw.....
201018C	22248	" " Set Screw.....
202490	22248	" Stand with 200383C.....
225391	22248	Thread Guide.....
201696J	22248	" " Lock Nut.....
225326	22248	" " Position Cup.....
225324	22248	" " Rod with 208E and 225322...
208E	22248	" " " Screw.....
225322	22248	" " " Washer.....
225258	22248	Thread Unwinder complete, Nos. 201696J, 202490,225257,225324,225326,225388, two each 150203, 225391 and three wood screws 7/8 in. No. 12.....
27739	22248	Thread Cone (wood) for large cones.....
225390	22248	" " Holder, for inverted cones..
		Note: Nos. 27739 and 225390 are used with, but not included in 225258.

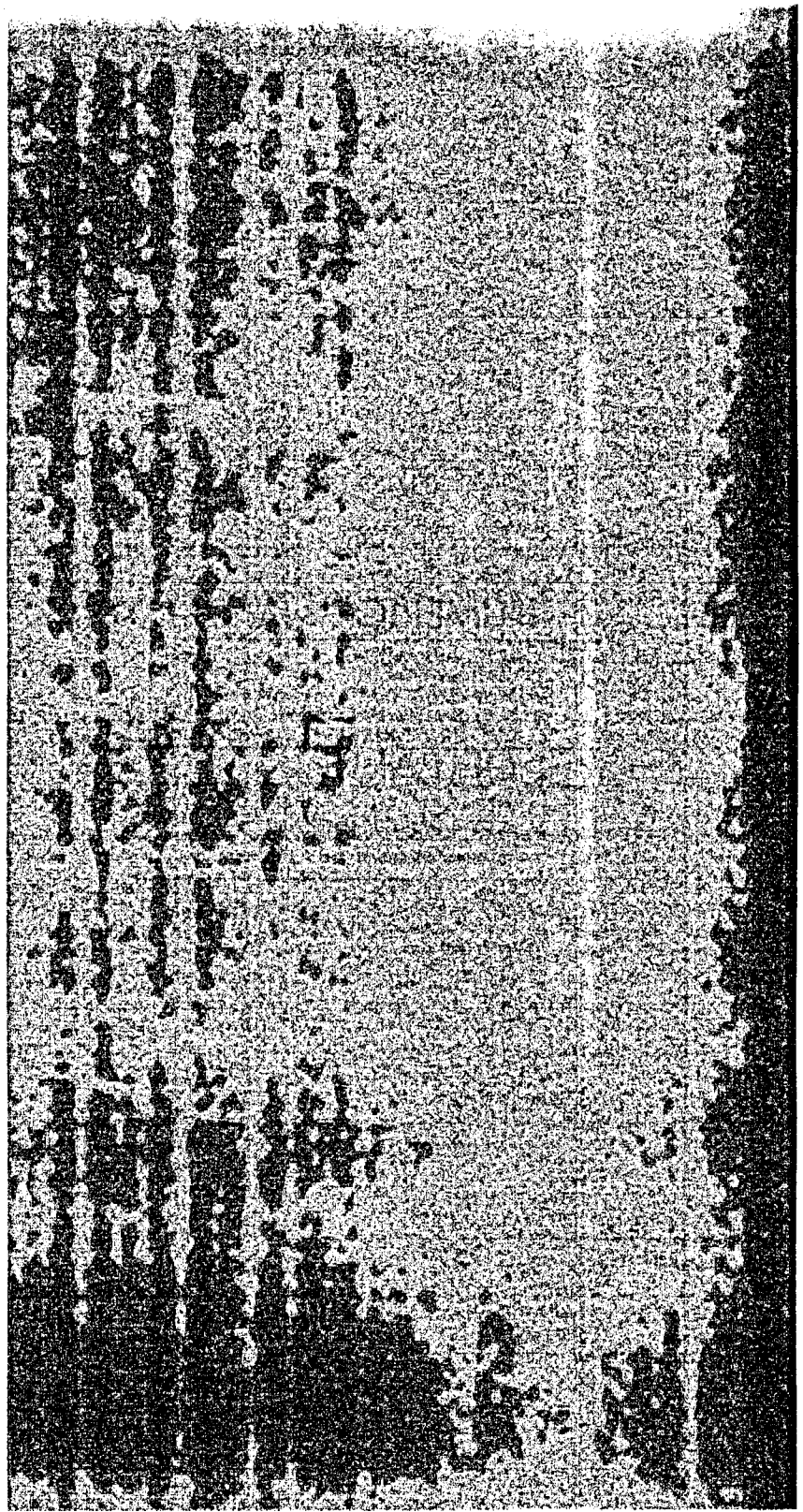

NUMERICAL LIST OF PARTS

No.	Plate	Name
35D	1483	Bobbin Winder Stop Latch Hinge Screw for 27647.....
65C	1478	Presser Bar Lifting Lever Hinge Screw...
76C	1476	Thread Take-up Lever Hinge Screw for 43673.....
111D	1477	Button Clamp Spring Screw for 43773 (2)
123E	1481	Starting Lever Bracket Screw.....
141C	1478	Presser Bar Lifting Lever Adjusting Screw for 43782.....
146D	1478	Tripping Lever Bracket Screw.....
158E	1476	Crank Connecting Rod Cap Screw for 12108 (2).....
158E	1477	Needle Bar Frame Cam Cover Screw (2)...
159F	1481	Starting Lever Belt Shifter Set Screw for 66028.....
171AL	1477	Needle Bar Frame Pitman Head Cap Screw for 66081 and 66082 (4).....
171AL	1479	Shuttle Race Screw (2).....
171AL	1478	Thread (lower) Cutting Blade Holder Screw.....
172F	1477	Button Clamp Screw.....
187E	1476	Needle Bar Connecting Stud Clamping Screw for 43644.....
190J	1477	Button Clamp Spreader Stop Screw for 43773.....
190J	1476	Starting Lever Bell Crank Cam Tripping Point Screw (2).....
190J	1481	Starting Lever Tripping Plate Screw for 66028 (2).....
190J	1477	Tension Releasing Arm Screw.....
190J	1477	Thread (upper) Cutting Blade Holder Slide Connection Screw.....
190J	1478	Thread Eyelet (side of arm) Screw.....
193D	1478	" (lower) Cutting Blade Connection Screw for 43799 (2).....
193D	1477	Thread (upper) Cutting Blade Holder Screw (2).....
200C	1477	Needle Bar Frame Driving Arm Set Screw for 43695.....
208E	22248	Thread Unwinder Thread Guide Rod Screw for 225324.....
217J	1480	Belt Cover Screw (2).....
219J	1477	Needle Bar Frame Thread Eyelet Screw....
219F	1478	" Plate Screw (small).....
219J	1477	Thread Wiper Bracket Screw (2).....
375C	1476	Crank Connecting Rod Hinge Screw.....

No.	Plate	Name
377C	1476	Needle Bar Connecting Link Hinge Screw..
389D	1477	Thread (upper) Cutting Blade Holder Slide Bracket Screw (left).....
418E	1483	Bobbin Winder Tension Screw Stud for 27308.....
437C	1476	Arm Shaft Flanged Bushing (back) Adjusting Screw.....
446AL	1476	Thread Take-up Cam Set Screw for 21578..
448AL	1476	Arm Shaft Flanged Bushing (back) Set Screw.....
448AL	1476	Needle Bar Frame Cam Set Screw for 66110
448AL	1476	" " " " Worm Set Screw for 43776.....
448AL	1476	Needle Bar Frame Cam Worm Wheel Set Screw for 43777.....
448AL	1478	Oscillating Rock Shaft Hinge Pin Set Screw.....
448AL	1477	Presser Bar Lifting Bracket Set Screw for 43700.....
448AL	1476	Starting Lever Bell Crank Cam Set Screw for 66029.....
448AL	1484	Table Chain Guide Pulley Shaft Set Screw for 14229.....
453AL	1477	Presser Bar Lifting Bracket Guide Bar Set Screw.....
453AL	1479	Thread Take-up Spring Regulator Set Screw.....
460AL	1479	Oscillating Shaft Crank Set Screw for 21557.....
564C	1481	Starting Lever Screw Center for 58384 (2).....
577C	1477	Needle Bar Frame Screw Center (lower)...
578D	1478	Thread (lower) Cutting Blade Holder Guide Screw (2).....
591F	1479	Shuttle Tension Regulating Screw for 43725.....
592E	1479	Shuttle Bobbin Case Latch Stop Screw for 43725.....
640F	1481	Starting Lever Cushion Screw for 66028 (2).....
641C	1481	Starting Lever Roller and Stud Set Screw for 66027.....
662F	1479	Shuttle Race Cap Screw for 43785.....
665J	1477	Thread Wiper Screw.....
679C	1477	Needle Bar Frame Pitman Ball Screw Stud (arm end) for 66081.....
688J	1477	Pressure Regulating Thumb Screw.....
691F	1478	Needle Plate Screw (large).....
731N	1485	Shaft Driving Pulley Clamping Screw for 150617 (2) (not regularly furnished).....

No.	Plate	Name
757D	1478	Thread (lower) Cutting Blade Screw (2).
777C	1477	Needle Bar Frame Pitman Ball Screw Stud (frame end) for 66082.....
793D	1477	Button Clamp Thumb Screw for 43773.....
802D	1478	Starting Lever Bell Crank Hinge Screw...
857AL	1477	Needle Set Screw for 43774.....
858AL	1484	Table Chain Guide Pulley Shaft Plug Screw for 14231.....
871E	1480	Belt Cover Bracket Screw Stud for 43584.
871E	1476	Stop Cam Spring Stop Block Screw for 43651.....
913C	1481	Stop Cam Interlocking Rod Spring Regulating Thumb Screw for 66028.....
945F	1477	Needle Bar Frame Screw Center (upper)...
997E	1476	Stop Cam Spring Cover Screw for 43651 (2).....
1069D	1476	Arm Shaft Screw.....
1070C	1481	Stop Cam Interlocking Rod Guide Set Screw for 21649.....
1097E	1477	Tension Releasing Pin Stop Screw for 43791.....
1161F	1478	Needle Plate Thread Guard Screw (2)....
1196C	1478	Tripping Lever Hinge Screw.....
1207D	1477	Thread Wiper Body Hinge Screw.....
1289D	1479	Shuttle Race Ring Spring Screw for 43785 (2).....
1329D	1477	Thread (upper) Cutting Blade Cap Screw (4).....
1423J	1477	Thread Guard Screw (2).....
1508E	1481	Starting Lever Screw Center Nut for 58384 (2).....
1517E	1476	Arm Shaft Flanged Bushing (back) Adjusting Screw Nut.....
1517E	1477	Needle Bar Frame Screw Center (lower) Nut.....
1517E	1477	Needle Bar Frame Screw Center (upper) Nut.....
1518E	1476	Crank Connecting Rod Hinge Screw Nut....
1518E	1476	Needle Bar Connecting Link Hinge Screw Nut.....
1518E	1477	Needle Bar Frame Pitman Ball Screw Stud (frame end) Nut.....
1520E	1477	Needle Bar Frame Pitman Ball Screw Stud (arm end) Nut.....
1520E	1481	Starting Lever Stop Screw Nut for 66028.
1528E	1478	Presser Bar Lifting Lever Adjusting Screw Nut for 43782.....
1560C	1479	Tension Regulating Thumb Nut for 44141..
1562J	1483	Bobbin Winder Tension Regulating Thumb Nut for 27308.....

No.	Plate	Name
1620J	1483	Bobbin Winder Frame Hinge Screw Nut for 27647.....
1638E	1481	Stop Cam Interlocking Rod Spring Regulating Thumb Screw Nut for 66028....
1648C	1477	Pressure Regulating Thumb Screw Lock Nut
1722E	1477	Needle Bar Frame Pitman Rod Nut (left hand thread) for 66077.....
1723E	1477	Needle Bar Frame Pitman Rod Nut (right hand thread) for 66077.....
1819	1476	Thread Take-up Lever Roller and Stud for 43673.....
1921	1479	Oscillating Shaft Crank Roller and Stud for 21557.....
1921	1478	Starting Lever Bell Crank Roller and Stud for 43706.....
2022	1477	Needle Bar Frame Driving Arm Pin.....
2022	1477	" " " Pitman Arm Pin.....
2049	1479	Oscillating Shaft Crank Pin.....
2049	1479	Shuttle Driver Pin.....
2102	1479	Tension Disc for 43756.....
2103	1479	" Spring for 43756.....
2106	1483	Bobbin Winder Tension Thread Guide for 27308.....
2455	1483	Bobbin Winder Tension Disc for 27308 (2).....
2523	1479	Shuttle Race Cap Steady Pin for 43785...
2718	1484	Foot Lifter and Starting Treadle Extension Screw Washer for 14376.....
2973	1479	Shuttle Bobbin Case Latch Lever for 15141.....
2974	1479	Shuttle Bobbin Case Latch Lever Fulcrum Pin for 15141.....
2975	1479	Shuttle Bobbin Case Latch Spring for 43725.....
2996	1479	Shuttle Bobbin for 43654.....
3012	1476	Thread Take-up Cam Pin.....
*3045	1476	Needle Bar Connecting Link for 43726....
4784	1478	Oscillating Rock Shaft Oil Pad (felt) for 21630.....
4822	1482	Wrench for 1528 (Accessories).....
4879	1484	Chain Connecting Link for 13351.....
5667	1484	Foot Lever for 5668.....
5668	1484	Foot Lever complete, Nos. 5667,5669,5671 and three wood screws 1 1/2 in. No. 16.....
5669	1484	Foot Lever Bracket for 5668.....
5671	1484	" " Hinge Pin for 5668.....
5672	1484	" " Lifting Spring.....
6055	1482	Bolt Nut Washer (Accessories) (4)....
7071	1477	Button Clamp Thumb Screw Washer for 43773.....

No.	Plate	Name
7336	1479	Thread Take-up Spring Regulator for 43756.....
8511	1479	Thread Take-up Spring for 43756.....
8582	1481	Starting Lever Bracket Dowel Pin.....
8908	1482	Wrench for 1070 (Accessories).....
10141	1483	Bobbin Winder Tension Spring for 27308..
10875	-----	Wrench for 1517, 1518 and 1520 (Accessories).....
11170	1477	Presser Bar Spring Washer.....
11241	1483	Bobbin Winder Spool Pin Washer (cloth) for 27308.....
11831	1482	Screw Driver (large) Accessories.....
12108	1476	Crank Connecting Rod with two 158E.....
12149	1479	Tension Thread Guard.....
12388	1478	Oscillating Rock Shaft Hinge Pin for 21630.....
13351	1484	Chain, length 46 in. to 55 in., with 56864 and 56865.....
14174	1481	Starting Lever Spring.....
14229	1484	Table Chain Guide Bracket with 448AL,for 14232.....
14230	1484	Table Chain Guide Pulley for 14232.....
14231	1484	" " " " Shaft 126928 with 858AL, for 14232.....
14232	1484	Table Chain Guide complete, Nos. 14229 to 14231 and four wood screws 1 1/4 in. No. 10 R.H.B.....
14372	1484	Foot Lifter and Starting Treadle for 14376.....
14373	1484	Foot Lifter and Starting Treadle Extension for 14376.....
14374	1484	Foot Lifter and Starting Treadle Spring for 14376.....
14375	1484	Foot Lifter and Starting Treadle Stand for 14376.....
14376	1484	Foot Lifter and Starting Treadle complete, Nos. 2718, 14372 to 14375, 17881, 50581R and two wood screws 1 1/4 in. No. 12 F.H.....
15072	1483	Bobbin Winder Bobbin Position Pin for 27538.....
15140	1479	Shuttle Bobbin Case Latch for 15141.....
15141	1479	" " " Hinge, Nos. 2973, 2974 and 15140, for 43725.....
*15404	-----	Trade Mark for 43766.....
15405	-----	" " Rivet for 43766 (2).....
17881	1484	Foot Lifter and Starting Treadle Shaft for 14376.....
19116	1477	Button Clamp Spring for 43773.....
19793	1477	Thread (upper) Cutting Blade Holder Slide Bracket Dowel Pin.....

No.	Plate	Name
20023	1477	Presser Bar Spring.....
21553	1477	Needle Bar Frame Thread Eyelet.....
21556	1479	Oscillating Shaft.....
21557	1479	" " Crank with 460AL and 1921.....
21562	1479	Shuttle Body for 43654.....
21578	1476	Thread Take-up Cam with 446AL.....
21615	1476	Stop Cam Spring (long) for 43651.....
21616	1476	" " " (short) for 43651.....
21617	1476	" " " Stop Block for 43651....
21630	1478	Oscillating Rock Shaft with 4784 and 12388.....
21634	1476	Arm Shaft Flanged Bushing (back).....
21643	1481	Starting Lever Belt Shifter complete for 66028.....
21645	1481	Starting Lever Cushion (rawhide) for 66028 (3).....
21647	1476	Stop Cam with 21652, for 43651.....
21649	1481	" " Interlocking Rod Guide with 1070C, for 66028.....
21651	1481	Stop Cam Interlocking Rod Spring for 66028.....
21652	1476	Stop Cam Pin for 21647.....
21653	1476	" " Spring Cover for 43651.....
21654	1482	Wrench for 1508 and 1638 (Accessories)
21730	1481	Starting Lever Bracket.....
23373	1480	Belt Cover.....
23668	1476	Needle Bar Frame Cam Pin.....
23668	1476	Pulley (tight) Pin.....
23668	1476	Starting Lever Bell Crank Cam Pin.....
26026	1482	Screw Driver (medium) Accessories.....
26485	1482	" " (small) Accessories.....
27302	1483	Bobbin Winder Frame for 27647.....
27303	-----	" " " Spring for 27647....
27306	1483	" " Spool Pin for 27308.....
27307	1483	" " " Stand for 27308.....
27308	1483	Bobbin Winder Spool Stand complete for 27544, Nos. 418E,1562J,2106,10141, 11241,27306,27307 and two each 2455 and wood screws 1 in. No. 10.....
27312	1483	Bobbin Winder Stop Latch for 27647.....
27538	1483	" " Spindle with 15072 and 41828, for 27647.....
27540	1483	Bobbin Winder Base for 27647.....
27541	1483	" " Pulley for 27647.....
27544	1483	Bobbin Winder (swinging automatic, right hand) complete, Nos. 27308 and 27647
27647	1483	Bobbin Winder for 27544, Nos. 35D,1620J, 27302,27303,27312,27538,27540,27541, 50356D and two wood screws 1 in.No.7

No.	Plate	Name
27739	22248	Thread Unwinder Thread Cone (wood) for large cones, for use with 225258....
32572	1479	Tension Releasing Disc for 43756.....
41828	1483	Bobbin Winder Spindle Collar Pin for 27538.....
43543	1479	Shuttle Race Cap for 43785.....
43583	1481	Stop Cam Interlocking Rod for 66028.....
43584	1480	Belt Cover Bracket with 871E and 43585..
43585	1480	" " " Stud for 43584.....
43644	1476	Needle Bar Connecting Stud with 187E,for 43726.....
43645	1477	Needle Bar Frame.....
43650	1476	Pulley (tight) for 43651.....
43651	1476	Pulley (tight) complete for 43652, Nos. 871E, 21615 to 21617, 21647, 21653, 43650 and two 997E.....
43652	1476	Pulleys complete, Nos. 43651 and 66085..
43654	1479	Shuttle, 1 11/16 in. diam., Nos. 2996, 21562 and 43725.....
43673	1476	Thread Take-up Lever with 76C and 1819..
43677	1476	Arm Shaft.....
43691	1477	Needle Bar Frame Cam Cover.....
43692	1476	" " " " Shaft.....
43695	1477	" " " Driving Arm with 200C and 51803.....
43696	1477	Needle Bar Frame Driving Arm Shaft.....
43698	1477	" " " Pitman Arm.....
43700	1477	Presser Bar Lifting Bracket with 448AL..
43706	1478	Starting Lever Bell Crank with 1921.....
43709	1479	Tension Releasing Pin for 43756.....
43719	1478	Thread Eyelet (side of arm).....
43725	1479	Shuttle Bobbin Case complete for 43654, Nos. 591F,592E,2975,15141 and 224842
43726	-----	Needle Bar Connecting Link 3045 with 43644.....
43745	1479	Shuttle Driver.....
43756	1479	Tension complete, Nos. 2103, 7336, 8511, 32572, 43709, 44141 and two 2102....
*43766	-----	Arm and Cylinder with 15404 and two 15405.....
43767	1477	Button Clamp (back) for 43773.....
43768	1477	" " (front) for 43773.....
43769	1477	" " Plate for 43773.....
43770	1477	" " Shank for 43773.....
43771	1477	" " Spreader for 43773.....
43773	-----	Button Clamp complete, Nos. 190J, 793D, 7071,19116,43767 to 43771, 66045 and two each 111D and 50130C.....
43774	1477	Needle Bar with 857AL.....
43776	1476	" " Frame Cam Worm with 448AL and 50243C.....

No.	Plate	Name
43777	1476	Needle Bar Frame Cam Worm Wheel with 448AL and 50243C.....
43778	1478	Needle Plate.....
43779	1478	" " Thread Guard.....
43780	1477	Presser Bar.....
43781	1477	" " Lifting Bracket Guide Bar...
43782	1478	" " " Lever with 141C and 1528E.....
43783	1479	Shuttle Race Body for 43785.....
43784	1479	" " Ring for 43785.....
43785	1479	Shuttle Race (flexible) complete, Nos. 662F,2523, 43543,43783,43784 and two each 1289D and 55439.....
43791	1477	Tension Releasing Arm with 1097E.....
43792	1478	Thread (lower) Cutting Blade.....
43793	1478	" " " " Holder.....
43794	1478	" " " " " Extension.....
43795	1478	Thread (lower) Cutting Blade Holder Guide.....
43796	1478	Thread (lower) Cutting Blade Holder Sleeve.....
43797	1478	Thread (lower) Cutting Blade Connection (bell crank end) for 43799.....
43798	1478	Thread (lower) Cutting Blade Connection (holder end) for 43799.....
43799	-----	Thread (lower) Cutting Blade Connection complete, Nos. 43797, 43798 and two 193D.....
43800	1478	Thread (lower) Cutting Blade Connection Bell Crank.....
44141	-----	Tension Screw Stud 50327C with 1560C,for 43756.....
50128D	1477	Thread (upper) Cutting Blade Holder Slide Bracket Screw (right).....
50130C	1477	Button Clamp Hinge Screw for 43773 (2).
50130C	1478	Thread (lower) Cutting Blade Connection Bell Crank Connection Hinge Screw (2).....
50130C	1478	Thread (lower) Cutting Blade Connection Hinge Screw (2).....
50130C	1477	Thread (upper) Cutting Blade Lever Hinge Screw.....
50243C	1476	Needle Bar Frame Cam Worm Position Screw for 43776.....
50243C	1476	Needle Bar Frame Cam Worm Wheel Position Screw for 43777.....
50302D	1478	Tripping Lever Pin Set Screw for 66032..
50327C	1479	Tension Screw Stud for 44141.....
50356D	1483	Bobbin Winder Frame Hinge Screw for 27647.....

No.	Plate	Name
50434C	1478	Thread (lower) Cutting Blade Connection Bell Crank Hinge Screw.....
50435D	1477	Thread (upper) Cutting Blade Holder Slide Screw (2).....
50454C	1481	Starting Lever Stop Screw for 66028.....
50581R	1484	Foot Lifter and Starting Treadle Extension Screw for 14376.....
51072E	1482	Bolt with 51581E, to secure machine to table (Accessories) (4).....
51581E	1482	Bolt Nut for 51072 (4).....
51803	1477	Needle Bar Frame Driving Arm Roller and Stud for 43695.....
51804	1481	Starting Lever Roller and Stud for 66027
51820	1477	Thread (upper) Cutting Blade Lever Roller and Stud for 66024.....
56864	1484	Chain Hook (large) for 13351.....
56865	1484	" " (small) for 13351.....
55439	1479	Shuttle Race Ring Spring for 43785 (2).
58384	-----	Starting Lever Screw Center 564C with 1508E (2).....
66001	1478	Thread (lower) Cutting Blade Connection Bell Crank Connection.....
66004	1477	Thread (upper) Cutting Blade with 66014.
66005	1477	" " " " Cap.....
66006	1477	" " " " Holder.....
66007	1477	" " " " " Slide with 66011.....
66009	1477	Thread (upper) Cutting Blade Holder Slide Connection with 66018.....
66010	1477	Thread (upper) Cutting Blade Holder Slide Spring.....
66011	1477	Thread (upper) Cutting Blade Holder Slide Spring Stud for 66007.....
66014	1477	Thread (upper) Cutting Blade Stud for 66004.....
66015	1477	Thread Guard.....
66016	1477	" Wiper.....
66017	1477	" " Body.....
66018	1477	" " " Pin for 66009.....
66019	1477	" " Bracket.....
66024	1477	" (upper) Cutting Blade Lever with 51820.....
66027	1481	Starting Lever with 641C and 51804, for 66028.....
66028	1481	Starting Lever complete, Nos.159F, 913C, 1520E,1638E,21643,21649,21651,43583, 50454C, 66027, 66031, two each 190J, 640F and three 21645.....
66029	1476	Starting Lever Bell Crank Cam with 448AL
66030	1476	" " " " " Tripping Point.....

No.	Plate	Name
66031	1481	Starting Lever Tripping Plate for 66028.
66032	1478	Tripping Lever with 50302D.....
66033	1478	" " Bracket.....
66034	1478	" " Pin.....
66035	1478	" " Spring.....
66045	1477	Button Clamp Spreader Stop for 43773....
66047	1477	Thread (upper) Cutting Blade Holder Slide Bracket.....
66077	-----	Needle Bar Frame Pitman complete, Nos. 1722E, 1723E and 66081 to 66083.....
66081	1477	Needle Bar Frame Pitman Head (arm end) with 679C and two 171AL, for 66077..
66082	1477	Needle Bar Frame Pitman Head (frame end) with 777C and two 171AL, for 66077..
66083	1477	Needle Bar Frame Pitman Rod for 66077...
66085	1476	Pulley (loose) for 43652.....
66110	1476	Needle Bar Frame Cam with 448AL.....
120346	1482	Oiler (copper plated) with 120347 (Accessories).....
120347	1482	Oiler Spout, 8 1/2 in. long, for 120346.
126928	-----	Table Chain Guide Pulley Shaft for 14231
150203	22248	Thread Unwinder Spool Rest Cushion (felt) for 225258.....
150617	1485	Shaft Driving Pulley (sectional,grooved) pressed steel, bulged type, rolled edge, 10 in. diam., 1 3/16 in. bore, with two 731N (Accessories) (not regularly furnished).....
200383C	22248	Thread Unwinder Spool Rest Rod Set Screw for 202490.....
201018C	22248	Thread Unwinder Spool Rest Set Screw for 225257.....
201696J	22248	Thread Unwinder Thread Guide Lock Nut for 225258.....
202490	22248	Thread Unwinder Spool Stand with 200383C, for 225258.....
224842	1479	Shuttle Tension Spring for 43725.....
225257	22248	Thread Unwinder Spool Rest with 201018C, for 225258.....
225258	22248	Thread Unwinder complete, for two spools or two large cones of thread, Nos. 201696J,202490,225257,225324,225326, 225388, two each 150203, 225391 and three wood screws 7/8 in. No. 12....
225322	22248	Thread Unwinder Thread Guide Rod Washer for 225324.....
225324	22248	Thread Unwinder Thread Guide Rod with 208E and 225322, for 225258.....
225326	22248	Thread Unwinder Thread Guide Position
225388	22248	Thread Unwinder Spool Rest Rod for 225258.....
225390	22248	Thread Unwinder Thread Cone Holder, for inverted cones, for use with 225258.
225391	22248	Thread Unwinder Thread Guide for 225258.

ILLUSTRATIONS OF PARTS

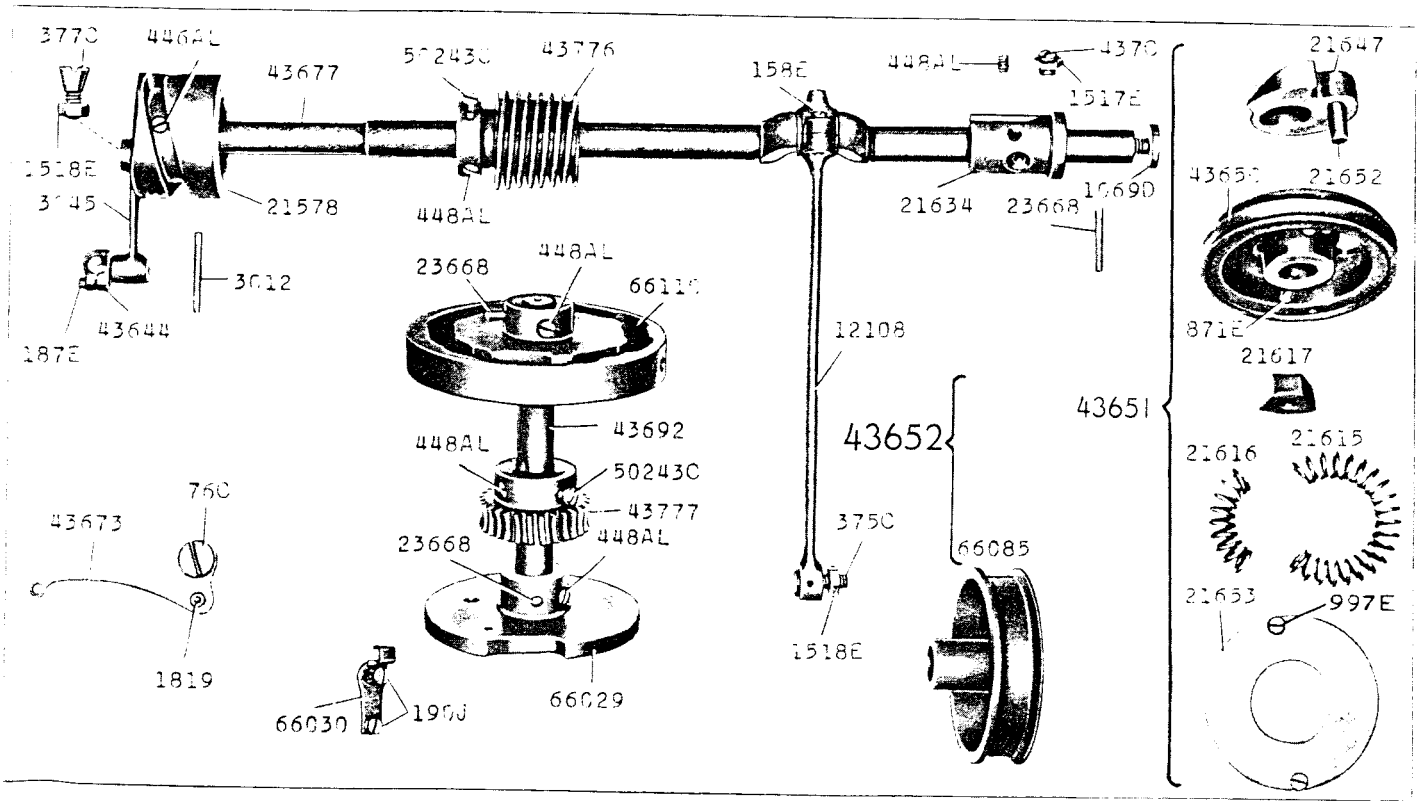

377C
446AL
43677
50243C
43776
158E
448AL
437C
1517E
21647
1518E
3045
21578
448AL
21634
23668
1069D
43650
21652
3012
23668
448AL
66110
43644
187E
12108
871E
21617
43692
43652
43651
448AL
50243C
21616
21615
76C
43777
43673
23668
448AL
375C
66085
21653
997E
1819
1518E
66030
190J
66029

1476 - 1/3