SINGER
136W111

Form 2674w
(141)
Printed in U. S. A.

LIST OF PARTS

MACHINE No. 136w111

THE SINGER MANUFACTURING COMPANY

INDEX

	Page
Accessories	17
Bobbin Winder	17
Feed Gears	19
Honing Device	20
Knee Lifter	18
Machine No.136w111	5
Motor	21
Numerical List of Parts	23
Throat Plates	19
Wood Base	22

INSTRUCTIONS FOR ORDERING

In ordering from this list, use ONLY the PART number in the FIRST column.

The number stamped on a Sewing Machine Part is the number of the Single Part only, except when the part includes Set Screws, Clamping Screws, Studs and Rollers Spun on, Small Wires riveted, or Parts soldered together, etc.,which it is necessary to furnish in combination.

Every combination of parts sent out has its specific number which, although not stamped on Parts (except in above case), must be used when ordering the combination.

Each number always indicates the SAME PART in whatever list it appears, or for whatever Machine.

The letters after some of the numbers indicate the style of finish only, as follows:

A. Hardened, Polished, Nickel Plated and Buffed.
B. Polished, Nickel Plated and Buffed.
C. Hardened only.
D. Polished only.
E. Soft, not polished.
F. Hardened and Polished.
H. Blued.
J. Nickel Plated only.
R. Merlized.
X. Black Oxide.
XC. Hardened and Black Oxide.
Y. Blade Nickel only.

These letters MUST BE USED when they appear in the list and AFTER the number, as in the list.

In this series:
200001 to 201500 and 350001 to 351500 are Screw Numbers.
201501 to 201800 and 351501 to 351800 are Nut Numbers.
201801 to 202000 and 351801 to 352000 are Roller Numbers.
202001 to 350000 are Numbers of Machine Parts.

The figures in the second column refer only to the plate in which the illustration of the part is shown and are NOT TO BE USED in ordering.

Two or more numbers over a cut indicate that the difference between such parts is not visible in an illustration.

Parts marked with an asterisk (*) are furnished when repairs are made at the factory.

LIST OF PARTS COMPLETE
FOR

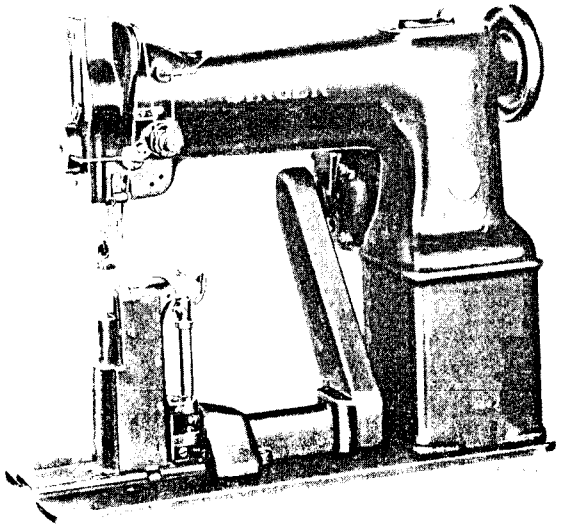

MACHINE No. 136w111

VERTICAL HOOK. POST BED.
CONTINUOUS WHEEL FEED.
BALL BEARING ROLLER PRESSER.
Horizontal Undertrimmer attached to Hook Post.
Motor attached to machine drives the knife continuously at high speed independent of the speed of the machine.
For Simultaneously Stitching the edges and Undertrimming the linings of Shoes, Sandals, Slippers, etc.

No.	Plate	Name
*249069	-----	Arm with 202135
249284	-----	" Base
204235	15748	" " Position Pin (2)
200004E	15748	" " Screw (3)
202005	15748	" " " Washer (3)
203091	15738	" Cap
200278H	15738	" " Screw
202248	15738	" " " Washer
203089	15738	" " Spool Holder Base
203090	15738	" " " " " 203089 with 200079H and 204296
200585H	15738	Arm Cap Spool Holder Base Screw
204296	15738	" " " " Wire
200079H	15738	" " " " " Hinge Screw
203092	15738	Arm Cap and Spool Holder complete,Nos. 203090,203091 and two 200585H

No.	Plate	Name
204235	15748	Arm Position Pin (2)
200004E	15748	" Screw (3)
202005	15748	" " Washer (3)
237702	15738	" Shaft with 224392 and 350431C
237748	15738	" " Bushing (back) with 202260
202260	15738	" " " " Oil Packing (wick)
200071E	15738	" " " " Screw (3)
207080	15738	" " " (front) with 202244
202244	15738	" " " " Oil Packing (wick)
200502B	15738	" " " " " " Thumb Screw
200338C	15738	Arm Shaft Bushing (front) Set Screw
224392	15738	" " Oil Packing (wick)
350431C	15738	" " " " Stop Screw
202632	15745	" Side Plate
200462B	15745	" " " Thumb Screw
237784	15738	Balance Wheel (disc) (belt groove, 2-3/8 in.diam.) with 200328C and 200335C
350419H	15738	Balance Wheel Adjusting Screw
200328C	15738	" " Position Screw
200335C	15738	" " Set Screw
*249285	-----	Bed
202258	15748	" Hinge Connection (2)
200570E	15748	" " " Screw (4)
203208	15743	Bobbin
238304	15743	" Case Base with 202056, 203211 to 203213 and 203216
203211	15743	Bobbin Case Base Latch
*202056	-----	" " " " Pin
203212	15743	" " " " Plunger
203213	15743	" " " " Spring
238312	15743	" " Cap with 200984C, 203214, 203215, 241674, 241675, two each 200594C and 350405C
234079	15752	Bobbin Case Lever
234065	15752	" " " Driving Block
200076D	15752	" " " " " Screw (2)
201272C	15752	" " " Hinge Screw
241674	15743	" " Oiling Felt
241675	15743	" " " " Retainer
350405C	15743	" " " " " Screw
203214	15743	" " Tension Spring
200984C	15743	" " " " Regulating Screw
200594C	15743	" " " " Screw
203215	15743	" " Thread Guide
200594C	15743	" " " " Screw
203216	15743	" " Washer (cloth)
238313	15743	Bobbin Case complete, Nos. 238304 and 238312
241732	15754	Edge Guide

No.	Plate	Name
241733	15754	Edge Guide Bracket
200934D	15754	" " " Hinge Screw
200380C	15752	" " " " " Set Screw
241763	15752	" " " " " " " Packing (brass)
25362	15752	Edge Guide Bracket Stop Ball
241734	15752	" " " " " Retainer
215190	15752	" " " " " Spring
200333C	15752	" " " " " " Adjusting Screw
200173D	15754	Edge Guide Screw (2)
237777	15745	Face Plate with 201650H and 350432XC
202135	15745	" " Position Pin
200473B	15745	" " Thumb Screw
249088	15741	Feed Post with 200362C, 200383C and two 201052C
249283	15741	Feed Post 249088 with 200102C, 249007, 249012 to 249014, 249019, 249068, 249073, 249076, 249078, 249079, 249092, 24[illegible]79, two 249077, three 200585H and four 200137H
249005	15752	Feed Post Cover (back)
249278	15752	" " " (front)
200159F	15752	" " " (back or front) Clamp Screw (2)
200583H	15752	Feed Post Cover (back or front) Screw (6)
249007	15741	" " " (side)
200137H	15741	" " " " Screw
200029E	15741	" " Screw (2)
249065	15741	" Wheel
249279	15741	" " 249065 with 249011 and three 229D
249092	15741	Feed Wheel Adjusting Stud (eccentric)
249068	15741	" " Bearing
200585H	15741	" " " Screw
249011	15741	" " Bevel Gear
249012	15741	" " " " Driving Pinion with two 201052C
201052C	15741	Feed Wheel Bevel Gear Driving Pinion Set Screw
249013	15741	Feed Wheel Bevel Gear Driving Pinion Shaft (lower)
249014	15741	Feed Wheel Bevel Gear Driving Pinion Shaft (lower) Bushing
200383C	15741	Feed Wheel Bevel Gear Driving Pinion Shaft (lower) Bushing Set Screw
249077	15741	Feed Wheel Bevel Gear Driving Pinion Shaft (lower) Collar with two 200393C
200393C	15741	Feed Wheel Bevel Gear Driving Pinion Shaft (lower) Collar Set Screw

No.	Plate	Name
249076	15741	Feed Wheel Bevel Gear Driving Pinion Shaft (upper)
249077	15741	Feed Wheel Bevel Gear Driving Pinion Shaft (upper) Collar with two 200393C
200393C	15741	Feed Wheel Bevel Gear Driving Pinion Shaft (upper) Collar Set Screw
249078	15741	Feed Wheel Bevel Gear Driving Pinion Shaft Connection
249073	15741	Feed Wheel Bevel Gear Driving Pinion Thrust Washer
229D	15741	Feed Wheel Bevel Gear Screw
249079	15741	" " Bracket
249019	15741	" " " Friction Plug
201052C	15741	" " " " " Set Screw
200362C	15741	" " " Set Screw
200102C	15741	" " Cap Screw
249023	15739	" " Driving Gear (for 15 stitches)
249024	15739	" " " " (for 16 stitches)
249026	15739	" " " " (for 18 stitches)
238613	15739	" " " " Key
238614	15739	" " " " " Shifting Collar with 201464C
201464C	15739	Feed Wheel Driving Gear Key Shifting Screw Stud
238615	15739	Feed Wheel Driving Gear Key Spring
201202D	15739	" " " " " " Screw
238616	15739	" " " " " Stop Pin
249075	15739	" " " " Separating Washer (2)
249030	15739	Feed Wheel Driving Gear Shaft with 238616
249032	15739	" " " " " Bracket with 202299,238630 and two 200346C
202299	15739	Feed Wheel Driving Gear Shaft Bracket Oil Packing (wick)
249033	15739	Feed Wheel Driving Gear Shaft Bracket Plate with two 210983
210983	15739	Feed Wheel Driving Gear Shaft Bracket Plate Position Pin
200158B	15739	Feed Wheel Driving Gear Shaft Bracket Plate Screw (2)
201082E	15739	Feed Wheel Driving Gear Shaft Bracket Screw (long)
225532	15739	Feed Wheel Driving Gear Shaft Bracket Screw (long) Washer
201308E	15739	Feed Wheel Driving Gear Shaft Bracket Screw (short)
203637	15739	Feed Wheel Driving Gear Shaft Bracket Screw (short) Washer
238630	15739	Feed Wheel Driving Gear Shaft Bushing

No.	Plate	Name
249031	15739	Feed Wheel Driving Gear Shaft Collar with 200397H
200397H	15739	Feed Wheel Driving Gear Shaft Collar Set Screw
249037	15753	Feed Wheel Driving Pinion (for 15 stitches)
249038	15753	Feed Wheel Driving Pinion (for 16 stitches)
249040	15753	Feed Wheel Driving Pinion (for 18 stitches)
231433	15753	Feed Wheel Driving Pinion Key
238632	15753	" " " " Spacing Washer (for use in place of Feed Wheel Driving Pinion when one or two lengths of stitch are required)
249044	15753	Feed Wheel Driving Shaft
249045	15753	" " " " Bushing (back)
200362C	15739	" " " " " " Set Screw
249046	15753	Feed Wheel Driving Shaft Bushing (front)
200346C	15739	" " " " " " Set Screw
249047	15753	Feed Wheel Driving Shaft Collar with two 201052C
201052C	15753	Feed Wheel Driving Shaft Collar Set Screw
237724	15753	" " " " Gear with 200378C and 201220C
201220C	15753	Feed Wheel Driving Shaft Gear Position Screw
200378C	15753	Feed Wheel Driving Shaft Gear Set Screw
201666E	15753	" " " " Nut
203411	15753	" " " " Washer
*221214	-----	Hook (sewing)
241602	15743	" 221214 with 201253F,201376F and 241604
249095	15743	Hook and Bobbin Case complete,Nos.238313 and 241602
249049	15752	Hook Bevel Gear Socket,14 teeth
234024	15752	" " " " Friction Washer
200555H	15743	" " " " Screw
241551	15753	" " Pinion,28 teeth,with two 200378C
201318E	15753	Hook Bevel Pinion Guard Oil Stop Screw
201082E	15753	" " " " Screw
*249050	-----	" " " " Section (back)
*249051	-----	" " " " " (front)
249052	15753	Hook Bevel Pinion Guard complete,Nos. 201082E,201318E,249050 and 249051
200378C	15753	Hook Bevel Pinion Set Screw
237728	15753	" Driving Shaft

No.	Plate	Name
235857	15753	Hook Driving Shaft Bevel Gear with 200374C and 200396C
237729	15739	Hook Driving Shaft Bevel Gear Housing with 200346C and three 200362C
237730	15739	Hook Driving Shaft Bevel Gear Housing Cap (bottom)
237731	15739	Hook Driving Shaft Bevel Gear Housing Cap (bottom) Gasket
237732	15739	Hook Driving Shaft Bevel Gear Housing Cap (side)
237733	15739	Hook Driving Shaft Bevel Gear Housing Cap (side) Gasket
200053C	15739	Hook Driving Shaft Bevel Gear Housing Cap Screw (4)
201082E	15739	Hook Driving Shaft Bevel Gear Housing Screw (long)
225532	15739	Hook Driving Shaft Bevel Gear Housing Screw (long) Washer
201308E	15739	Hook Driving Shaft Bevel Gear Housing Screw (short)
203637	15739	Hook Driving Shaft Bevel Gear Housing Screw (short) Washer
200396C	15753	Hook Driving Shaft Bevel Gear Position Screw
200374C	15753	Hook Driving Shaft Bevel Gear Set Screw
237734	15753	" " " Bushing (back)
200362C	15739	" " " " " Set Screw
249053	15753	" " " " (front)
200338C	15753	" " " " " Set Screw
221743	15753	" " " Collar with two 200380C
200380C	15753	" " " " Set Screw
241604	15743	" Gib
201376F	15743	" " Hinge Screw
201253F	15743	" " Screw
249280	15752	" Post
249072	15752	" " Oil Packing (wick)
200959D	15752	" " " " " Screw (2)
200017C	15752	" " Screw (2)
203637	15752	" " " Washer (2)
221215	15752	" " Slide
221222	15743	" Washer
238508	15754	Knife
249286	15754	" Driving Lever (lower) with 200048C and 249288
200048C	15754	Knife Driving Lever (lower) Pinch Screw
241738	15754	" " " " Shaft
249287	15754	Knife Driving Lever (lower) complete, Nos. 104D, 24173 and 249286
241740	15754	Knife Driving Lever (upper) with 200048C

No.	Plate	Name
241720	15754	Knife Driving Lever (upper) Locking Plunger
241721	15754	Knife Driving Lever (upper) Locking Plunger Spring
201725D	15754	Knife Driving Lever (upper) Locking Plunger Spring Thumb Nut with 200389C
200389C	15754	Knife Driving Lever (upper) Locking Plunger Spring Thumb Nut Set Screw
200048C	15754	Knife Driving Lever (upper) Pinch Screw
241741	15754	Knife Driving Lever (upper) complete, Nos. 201725D, 241720, 241721 and 241740
*249288	------	Knife Driving Lever Fork
249289	15755	" " " " Slide Block
200102C	15755	" " " " " " Cap Screw
249298	15755	Knife Driving Lever Fork Slide Block Oiling Wick
24173	15754	Knife Driving Lever Fork Swivel
104D	15754	" " " " " Screw
249290	15755	" " " Guard
201256D	15755	" " " " Screw (2)
203411	15755	" " " " " Washer (2)
249291	15755	" " Shaft (eccentric)
249292	15755	" " " Collar with 200386C
200386C	15755	" " " " Set Screw
249293	15755	" " " Housing with two 249294
129E	15755	" " " " Screw (2)
249294	15755	" " " Needle Bearing
249295	15755	Knife Driving Shaft Pulley, double grooved for "V" belt, 1-23/32 and 1-13/16 in. diam., belt grooves, with two 200351C
200351C	15755	Knife Driving Shaft Pulley Set Screw
241751	15752	" Guard
200110D	15752	" " Screw (2)
241742	15754	" Lever
200168D	15754	" " Screw (2)
200169H	15754	" Screw (2)
241743	15754	" Shaft
241744	15754	" " Spring
214833	15754	" " " Adjusting Collar with 200380C
200380C	15754	Knife Shaft Spring Adjusting Collar Set Screw
241745	15754	Knife Switch-in Lever with 200061C
200061C	15754	" " " Pinch Screw
241746	15754	" Switch-out Lever
200284D	15754	" " " Hinge Screw
241747	15754	" " Plunger
237937	15748	Knee Lifter Connection Lever
200262H	15748	" " " " Hinge Screw

No.	Plate	Name
234019	15748	Knee Lifter Connection Lever Lifting Rod with 202302
202302	15748	Knee Lifter Connection Lever Lifting Rod Cotter Pin
237838	15748	Knee Lifter Lifting Lever
200262H	15748	" " " " Hinge Screw
RW161	------	Motor
		For Itemized list of Motor Parts see page 21
249296	15755	Motor Belt (moulded 1/4 x 22-1/2)
249297	15755	" " Guard
51025X	15755	" " " Screw (2)
248875	15755	" Bracket
200019E	15755	" " Screw (3)
225585	15755	" " " Washer (3)
248876	15755	" " Spacing Collar (3)
248877	15756	" Pulley,double grooved,for "V" belt 1-13/32 and 1-33/64 in.diam.belt grooves with 201190C
200364C	15756	Motor Pulley Set Screw
350437E	15755	" Screw (4)
237937	15747	Needle Bar with 200141F
202552	15747	" " Connecting Link
264718	15747	" " " " Oil Guard
200161D	15747	" " " " " " Screw
202333	15747	" " " " Stud with 202254
202254	15747	" " " " " Oil Packing (wick)
200374C	15747	Needle Bar Connecting Link Stud Set Screw
200383C	15747	Needle Bar Connecting Link Stud Set Screw
*206891	-----	Needle Bar Connecting Stud
202329	15747	" " " " 206891 with 200086C and 202330
202330	15747	Needle Bar Connecting Stud Oil Packing (wick)
200086C	15747	Needle Bar Connecting Stud Pinch Screw
202692	15747	" " Crank with 200335C,200374C, 200383C,200428C and 202333
237737	15747	Needle Bar Crank 202692 with 202329, 202399,202400,202552 and 237762
203172	15747	Needle Bar Crank Friction Washer
200428C	15747	" " " Position Screw
200335C	15747	" " " Set Screw
202664	15747	" " Rock Frame
237738	15747	" " " " 202664 with 237937
*38127	-----	" " " " Driving Eccentric
*237749	-----	" " " " " " Body
350107C	15738	" " " " " " " Position Screw

No.	Plate	Name
443C	15738	Needle Bar Rock Frame Driving Eccentric Body Set Screw
1103C	15738	Needle Bar Rock Frame Driving Eccentric Regulating Screw
217D	15738	Needle Bar Rock Frame Driving Eccentric Set Screw
7071	15738	Needle Bar Rock Frame Driving Eccentric Set Screw Washer
237750	15738	Needle Bar Rock Frame Driving Eccentric complete,Nos.217D,443C,1103C,7071, 38127,237749 and 350107C
237739	15748	Needle Bar Rock Frame Driving Fork Lever with 200029E
200029E	15748	Needle Bar Rock Frame Driving Fork Lever Pinch Screw
237740	15748	Needle Bar Rock Frame Driving Fork Lever Slide Block (two pieces)
210910	15747	Needle Bar Rock Frame Hinge Stud with 202277
202277	15747	Needle Bar Rock Frame Hinge Stud Oil Packing (wick)
200347C	15747	Needle Bar Rock Frame Hinge Stud Set Screw
202666	15747	Needle Bar Rock Frame Position Bracket
200098F	15747	" " " " " " Screw
202667	15748	Needle Bar Rock Frame Rock Shaft
210978	15748	" " " " " " 202667 with 200387C and 210920
202668	15748	Needle Bar Rock Frame Slide Block
210920	15748	" " " " " " 202668 with 201141C
201141C	15748	Needle Bar Rock Frame Slide Block Screw Stud
200387C	15748	Needle Bar Rock Frame Slide Block Screw Stud Set Screw
200141F	15747	Needle Set Screw
207072	15746	Presser Bar Bushing (2)
200352C	15746	" " " Set Screw (2)
202671	15746	" " Lifter
200653C	15746	" " " Hinge Screw
207963	15746	" " Lifting Releasing Lever Bracket
200975F	15746	Presser Bar Lifting Releasing Lever Bracket Guide Screw
206608	15746	Presser Bar Lifting Releasing Lever Bracket Spring
202337	15746	Presser Bar Position Guide
202338	15746	" " " " Lever with 200086F

No.	Plate	Name
200086F	15746	Presser Bar Position Guide Lever Pinch Screw
200352C	15746	Presser Bar Position Guide Set Screw
207965	15748	" " Spring (flat)
210949	15746	" " " Bracket with 200086C
200086C	15746	" " " " Pinch Screw
350346C	15748	" " " Regulating Screw
200948F	15748	" " " Support Screw
201997	15746	Roller Presser,1 in.diam.,5/32 in.face (fine) with 1528J,201699C,350104C and twenty-eight 206417
249056	15746	Roller Presser Arm
249057	15746	" " " 249056 with 201997
233807	15746	" " " Bracket
235088	15746	" " " " Position Collar with 200362C
200117F	15746	Roller Presser Arm Bracket Position Collar Position Screw
200362C	15746	Roller Presser Arm Bracket Position Collar Set Screw
202558	15746	Roller Presser Arm Bracket Spring
202559	15746	" " " " " Stop
200141F	15746	" " " " " " Screw
200096D	15746	Roller Presser Arm Screw
206417	15746	" " Ball,1/16 in.diameter
201699C	15746	" " " Cone
202557	15746	" " Bar
350104C	15746	" " Hinge Screw
1528J	15746	" " " " Nut
249058	15746	Roller Presser and Bar complete,Nos., 200096D,200117F,202557 to 202559, 233807,235088,249057 and two 200141F
237762	15747	Take-up Lever
202399	15747	" " Driving Stud with 202277
202277	15747	" " " " Oil Packing (wick)
202400	15747	Take-up Lever Hinge Stud with 202423
202423	15747	" " " " Oil Packing (wick)
200383C	15747	Take-up Lever Hinge Stud Set Screw
202401	15746	" " Oiling Felt
200132E	15746	" " " " Screw
244048	15744	Tension Disc (back)
244049	15744	" " (front)
202404	15746	" Release Plunger
244061	15744	" " Washer
202407	15744	" Spring
263106	15744	" " Washer
200625F	15744	" Stud with 204925

No.	Plate	Name
200061C	15744	Tension Stud Set Screw
204925	15744	" " Washer
201572B	15744	" Thumb Nut
244062	15744	Tension complete,Nos.200625F,201572B, 202407,202410,244048,244049,244061 and 263106
202410	15744	Thread Controller Spring
202411	15744	" " " Stop
200132E	15744	" " " " Screw
202412	15738	" Guide
210955	15744	" " (upper)
200582H	15744	" " Screw (2)
241755	15745	" Lubricator Oil Pad (felt)
237779	15745	" " " " Holder
240439	15745	" " " " Retainer
241758	15745	" " " Reservoir
241759	15745	" " " Wick
350432XC	15745	" " Screw
201650H	15745	" " " Nut
214838	15745	" " " Washer
237780	15745	Thread Lubricator complete,Nos.214838, 237779,240439,241755,241758 and 241759
240034	15744	Thread Retainer
210956	15744	" " Bracket with 200397H
200582H	15744	" " " Screw (2)
210993	15744	" " Sleeve
200366H	15744	" " Set Screw
223844	15744	" " Spring
210957	15744	" " Stud
210958	15744	" " " Collar
200397H	15744	" " " Set Screw
210959	15744	Thread Retainer (lower) complete,Nos. 210956 to 210958,210993 and 223844
249179	15752	Throat Plate Body
249180	15752	" " Needle Plate,56 elongated needle hole,for needle sizes 12 and 13 (minimum trimming margin .045 in.)
200587D	15752	Throat Plate Needle Plate Screw
249181	15752	Throat Plate complete,56 elongated needle hole,for needle sizes 12 and 13,Nos. 249179,249180 and two 200587D
200199H	15752	Throat Plate Screw (2)
249066	15748	Vertical Shaft
237745	15748	" " Bevel Gear (lower)
205508	15748	" " " " " Position Pin
235857	15748	Vertical Shaft Bevel Gear (upper) with 200374C and 200396C
200396C	15748	Vertical Shaft Bevel Gear (upper) Position Screw

No.	Plate	Name
200374C	15748	Vertical Shaft Bevel Gear (upper) Set Screw
237734	15748	Vertical Shaft Bushing (lower)
200346C	15739	" " " " Set Screw
237746	15748	" " " (upper)
200362C	15748	" " " " Set Screw
237747	15738	" " Driving Gear with 200374C and 200396C
200396C	15738	Vertical Shaft Driving Gear Position Screw
200374C	15738	Vertical Shaft Driving Gear Set Screw
249067	15748	" " Oil Leader (lower) (brass)
237755	15738	" " " " (upper) (brass)

Genuine Singer Needles should be used in Singer Machines. These Needles and their Containers are marked with the Company's Trade Mark "SIMANCO." 1

Needles in Containers marked "For Singer Machines" are not Singer made needles. 2

ACCESSORIES

No.	Plate	Name
203208	15743	Bobbin (5)
*225482	-----	" Case Screw Driver Blade
*225483	-----	" " " " Handle
225497	15757	Bobbin Case Screw Driver complete, Nos. 225482 and 225483
238632	15753	Feed Wheel Driving Pinion Spacing Washer (2)
238508	15754	Knife
4822	15757	Roller Presser Hinge Screw Nut Wrench
16 x 4	15747	Needles, six, three each, sizes 12 and 13
228288	15751	Drip Pan with four 1 in. wire nails
41400	15757	Machine Rest Pin (wood)
120342	15757	Oiler (copper plated) with 120343
120343	15757	" Spout (3-1/2 in. long)
225498	15757	Screw Driver (7-1/4 in. long)
225554	15757	Wrench (steel)

BOBBIN WINDER

(SWINGING AUTOMATIC, RIGHT HAND)

259428	16615	Brake (leather)
259429	16615	" Clamp
200113F	16615	" " Screw
225453	16615	Frame with 202277 and 225438
225454	16615	" Hinge Pin
202277	16615	" Oil Packing (wick)
225438	16615	" " Well Cap
225455	16615	" Spring
225456	16615	" " Plunger
225368	16615	Pulley with 200380C
200380C	16615	" Set Screw
225381	16615	Spindle
225444	16615	Stop Latch
200056E	16615	" " Screw
225458	16615	" " Thumb Lever
225459	16615	" " " " Hinge Stud
225459	16615	" " " " Joint Stud
202478	16615	" " Trip Lever

No.	Plate	Name
200299H	16615	Stop Latch Trip Lever Hinge Screw
225461	16615	Tension Bracket with 201499B
200082D	16615	" " Screw
228026	16615	" " " Washer
2102	16615	" Disc
13710	16615	" Spring
201499B	16615	" Stud
201572B	16615	" " Thumb Nut
225462	16615	Bobbin Winder Tension Bracket complete, Nos.13710,201572B,225461 and two 2102
259430	16615	Bobbin Winder and Tension Bracket Base
259431	16615	Universal Bobbin Winder complete,Nos. 200056E,200082D,200113F,200299H,202478 225368,225381,225444,225453 to 225456, 225458,225462,228026,259428 to 259430 two each 225459 and wood screws 3/4 in.,No.12,R.H.B.

KNEE LIFTER

228359	16643	Rock Lever with two 350231C
228360	16643	" " Bracket with 200347C and three wood screws 7/8 in.,No.12
228361	16643	Rock Lever Bracket 228360 with 228359, 228363,228367 and 228386
228362	16643	Rock Lever Extension with 200529C
350231C	16643	" " " Set Screw
228363	16643	" " Hinge Pin
228364	16643	" " Knee Plate with 350231C
228369	16643	" " " " Arm
350231C	16643	" " " " " Set Screw
350231C	16643	" " " " Set Screw
228365	16643	" " Rod
200529C	16643	" " " Set Screw
228386	16643	" " Spring
228367	16643	" " Stop Stud
200347C	16643	" " " " Set Screw
228368	16643	Knee Lifter complete,Nos.228361,228362, 228364,228365 and 228369

(Other Knee Lifter parts are listed with parts of machine head.)

FEED GEARS

No.	Plate	Name
249020	15739	Feed Wheel Driving Gear (for 12 stitches)
249021	15739	" " " " (for 13 stitches)
249022	15739	" " " " (for 14 stitches)
249023	15739	" " " " (for 15 stitches)
249024	15739	" " " " (for 16 stitches)
249025	15739	" " " " (for 17 stitches)
249026	15739	" " " " (for 18 stitches)
249027	15739	" " " " (for 19 stitches)
249028	15739	" " " " (for 20 stitches)
238641	15739	" " " " (for 21 stitches)
249029	15739	" " " " (for 23 stitches)
238642	15739	" " " " (for 24 stitches)
238605	15739	" " " " (for 26 stitches)
238606	15739	" " " " (for 29 stitches)
238607	15739	" " " " (for 32 stitches)
249034	15753	" " " Pinion (for 12 stitches)
249035	15753	" " " " (for 13 stitches)
249036	15753	" " " " (for 14 stitches)
249037	15753	" " " " (for 15 stitches)
249038	15753	" " " " (for 16 stitches)
249039	15753	" " " " (for 17 stitches)
249040	15753	" " " " (for 18 stitches)
249041	15753	" " " " (for 19 stitches)
249042	15753	" " " " (for 20 stitches)
238655	15753	" " " " (for 21 stitches)
249043	15753	" " " " (for 23 stitches)
238656	15753	" " " " (for 24 stitches)
238618	15753	" " " " (for 26 stitches)
238619	15753	" " " " (for 29 stitches)
238620	15753	" " " " (for 32 stitches)

THROAT PLATES

249179	15749	Throat Plate Body
249187	15749	" " "
249182	15749	" " Needle Plate,56 elongated needle hole,for needle sizes 12 and 13 (minimum trimming margin .035 inch)

No.	Plate-	Name
249180	15749	Throat Plate Needle Plate,56 elongated needle hole,for needle sizes 12 and 13 (minimum trimming margin .045 inch)
249188	15749	Throat Plate Needle Plate,56 elongated needle hole,for needle sizes 12 and 13 (minimum trimming margin .045 inch)
200587D	15749	Throat Plate Needle Plate Screw
249181	15749	Throat Plate complete,56 elongated needle hole,for needle sizes 12 and 13,Nos. 249179,249180 and two 200587D
249183	15749	Throat Plate complete,56 elongated needle hole,for needle sizes 12 and 13,Nos. 249179,249182 and two 200587D
249189	15749	Throat Plate complete,56 elongated needle hole,for needle sizes 12 and 13,Nos. 249187,249188 and two 200587D (for long stitch)

HONING DEVICE

259281	17640	Base with 457C and two 899D
259282	17640	" 259281 with 674D,721D,259274 to 259277,259309,259310,350372C and 350373J
259266	17640	Knife Holder Clamp
259267	17640	" " " Base
259268	17640	" " " " 259267 with 771J, 1359J,36006,41544,259266,259269 and 259284
899D	17640	Knife Holder Clamp Base Locking Thumb Screw
1359J	17640	Knife Holder Clamp Hinge Screw
36006	17640	" " " " " Washer
259269	17640	" " " Spring
259284	17640	" " " Washer
771J	17640	" " Clamping Thumb Screw
41544	17640	" " " " " Washer
259270	17640	" Hone
259271	17640	" " Clamp
215057	17640	" " " Position Pin
200466B	17640	" " " Thumb Screw
259272	17640	" " Holder with two 215057
259273	17640	" " " 259272 with 259270,two each 200466B and 259271
259274	17640	Knife Hone Holder Guide
259275	17640	" " " " Collar
721D	17640	" " " " " Set Screw

No.	Plate	Name
259276	17640	Knife Hone Holder Guide Collar Yoke
674D	17640	" " " " " " Hinge Screw
259277	17640	Knife Hone Holder Guide Collar Yoke Hinge Screw Bushing
350372C	17640	Knife Hone Holder Guide Collar Yoke Hinge Screw Bushing Set Screw
350373J	17640	Knife Hone Holder Guide Thumb Set Screw
259310	17640	" Stop Pin (long)
259309	17640	" " " (short)
457C	17640	" " " Set Screw
899D	17640	" " " Thumb Screw
259283	17640	Honing Device complete,Nos.259268,259273, 259282,Form 2399W and three wood screws 1-1/2 in.,No.8

MOTOR

RW 161

798900	15756	Capacitor
942298	15756	" Box
942299	15756	" " Cover
50815R	15756	" " " Screw
942297	15756	Capacitor Box complete,Nos.942298,942299 and four 50815R
740576	15756	Capacitor,Capacitor Box and Switch complete,Nos.796801,798900,876380 and 942297
930037R	15756	Capacitor Box Screw (2)
740575	15756	End Cover (front end)
740555	15756	" " " " Cap
739151	15756	" " (pulley end)
930021R	15756	" " Bolt (4)
51575R	15756	" " " Nut (4)
701606	15756	" " " " Lock Washer (4)
729871	15756	Lead Cord with Plug complete
931228	15756	" " Insulating Bushing (fibre)
194814	15756	" " Strain Relief
876380	15756	On and Off Switch
796801	15756	" " " " Indicator Plate
740561	15756	Rotor complete
734702	15756	" Shaft Ball Bearing
740556	15756	" " " " Grease Fitting (alemite) (2)
740580	15756	Stator with Housing complete
740578	15756	" Lead Insulating Bushing
743614	15756	" " " " Retaining Ring

WOOD BASE

(OBLIQUE)

No.	Plate	Name
227493	15751	Bed Hinge Plate 202259 with two wood screws 7/8 in.,No.12H
225589	15751	Machine Cushion (leather)
228357	15751	Wood Base with two 227493,four 225589 and eight wood screws 1-1/2 in.,No.7

Genuine Singer Needles should be used in Singer Machines. These Needles and their Containers are marked with the Company's Trade Mark "SIMANCO." 1

Needles in Containers marked "For Singer Machines" are not Singer made needles. 2

15738 - 1/3

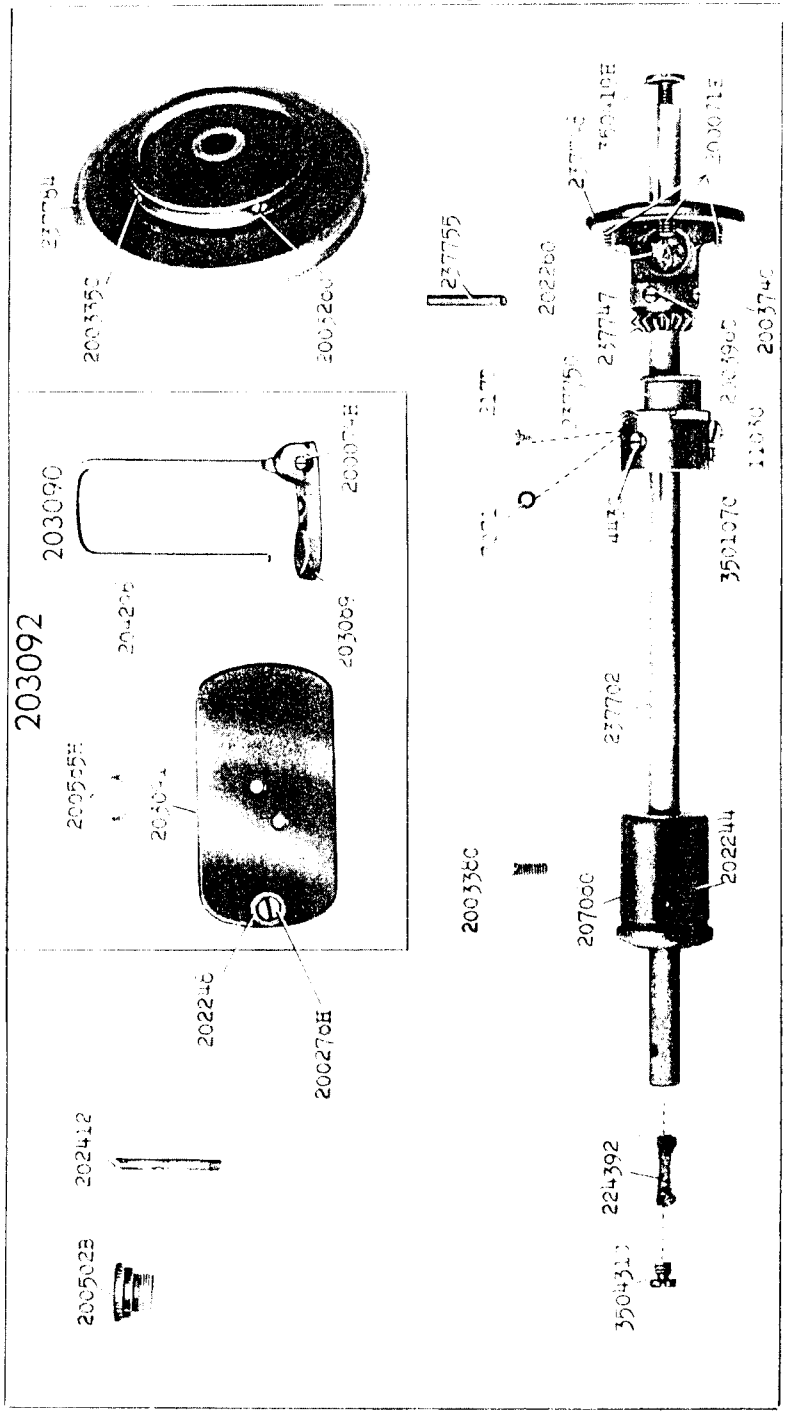

15739 - 1/3

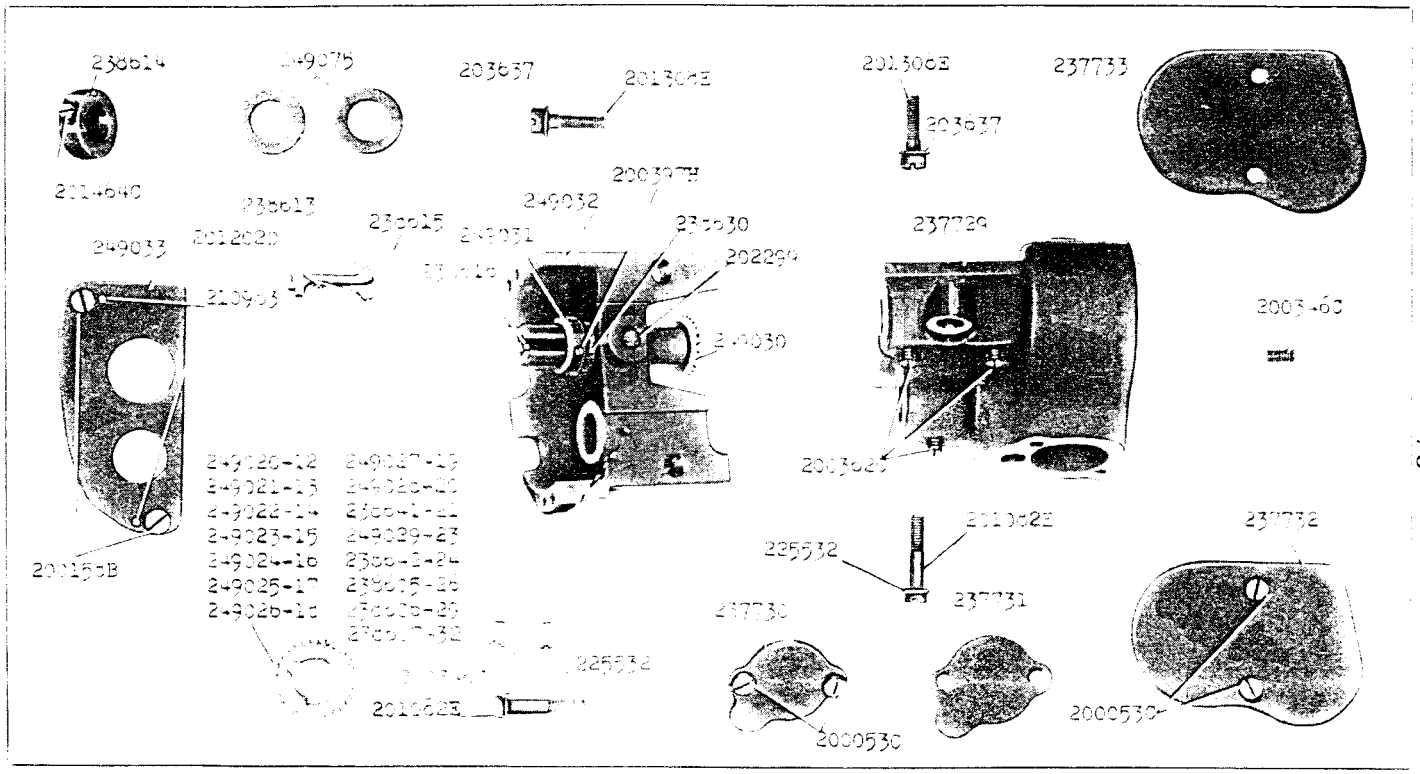

15741 - 1/3

249283

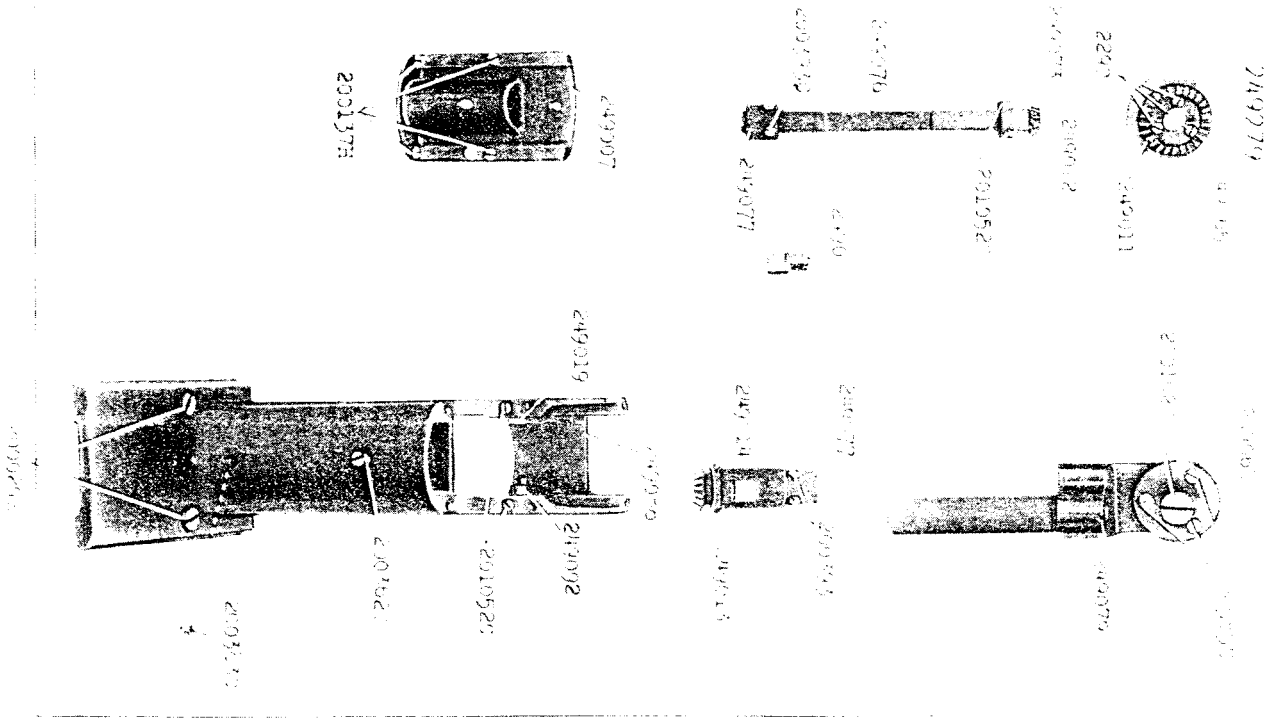

15743

249095

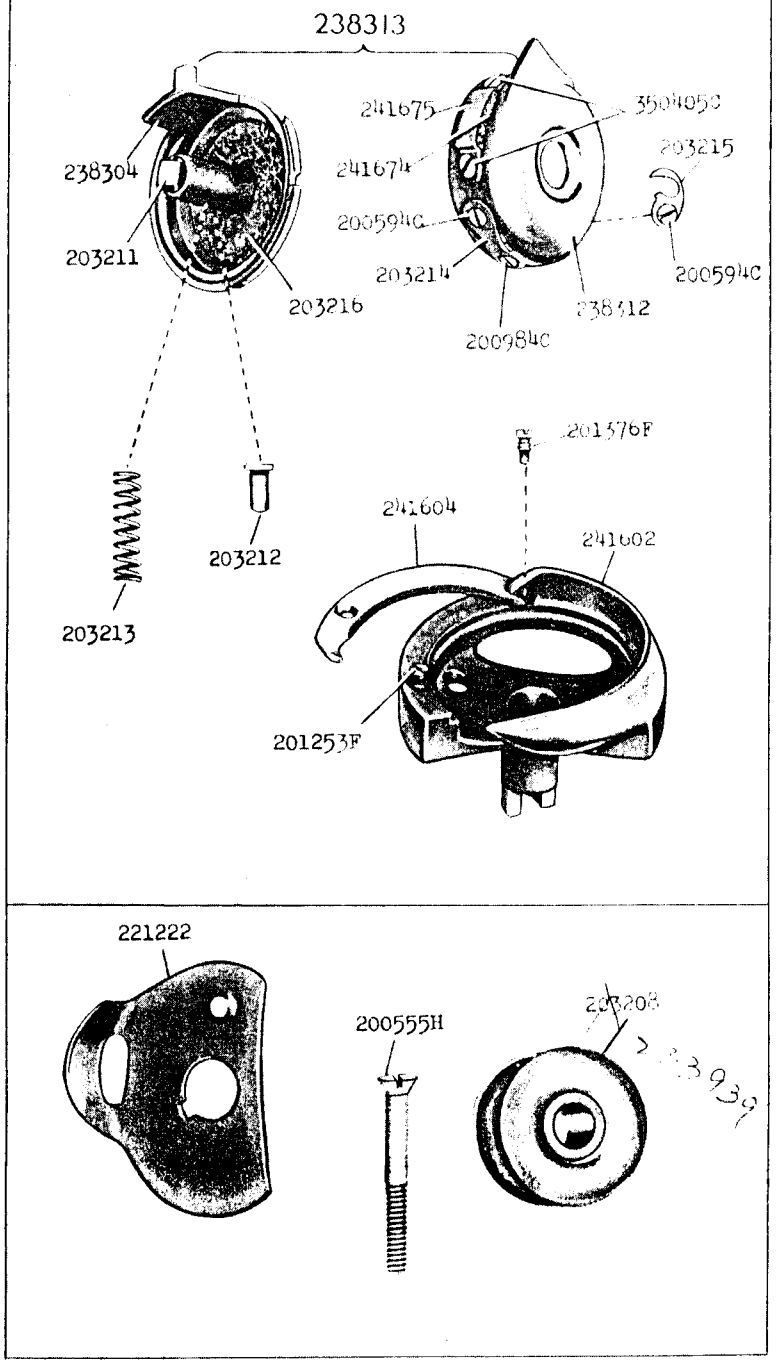

15744 - 2/3

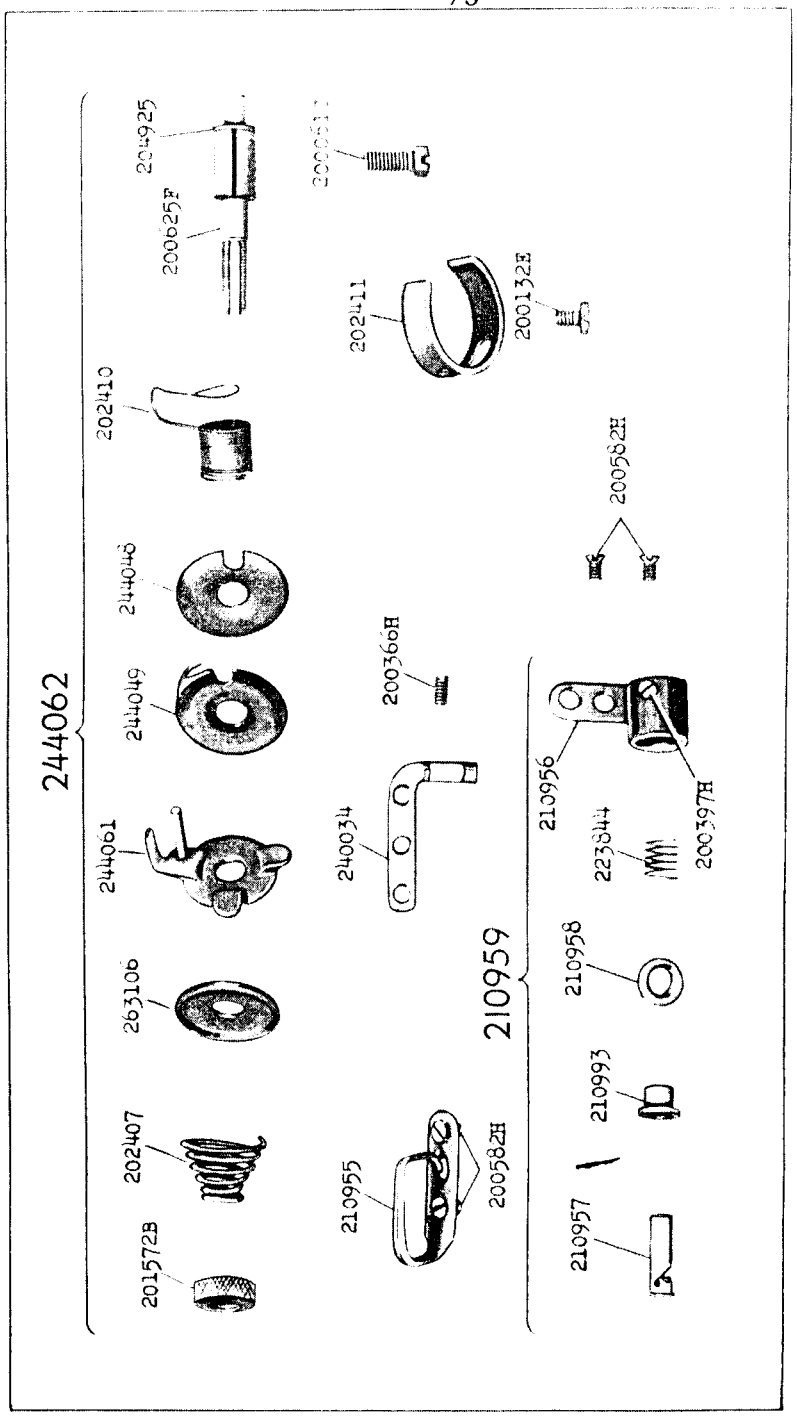

15745 - ½

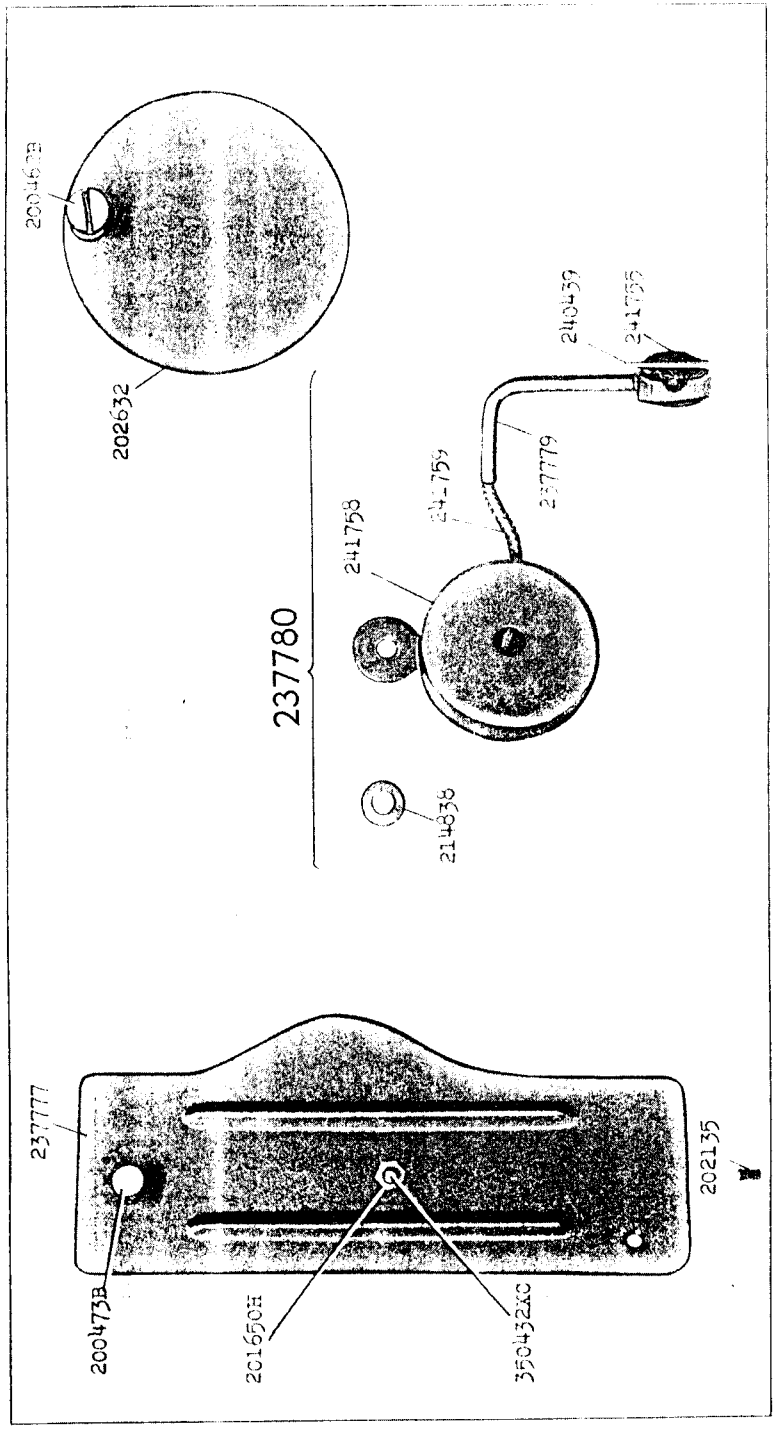

15746 - ½

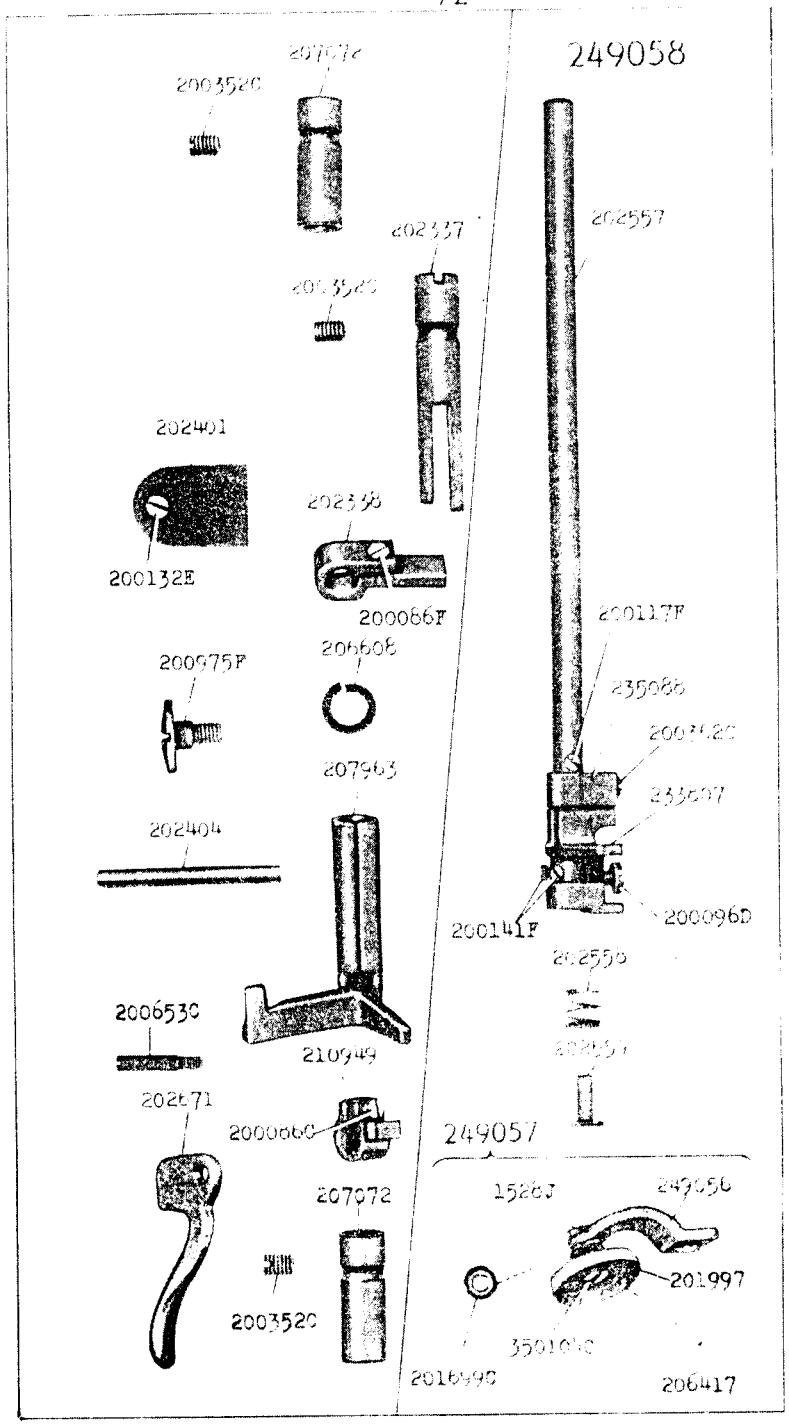

15747 - 1/2

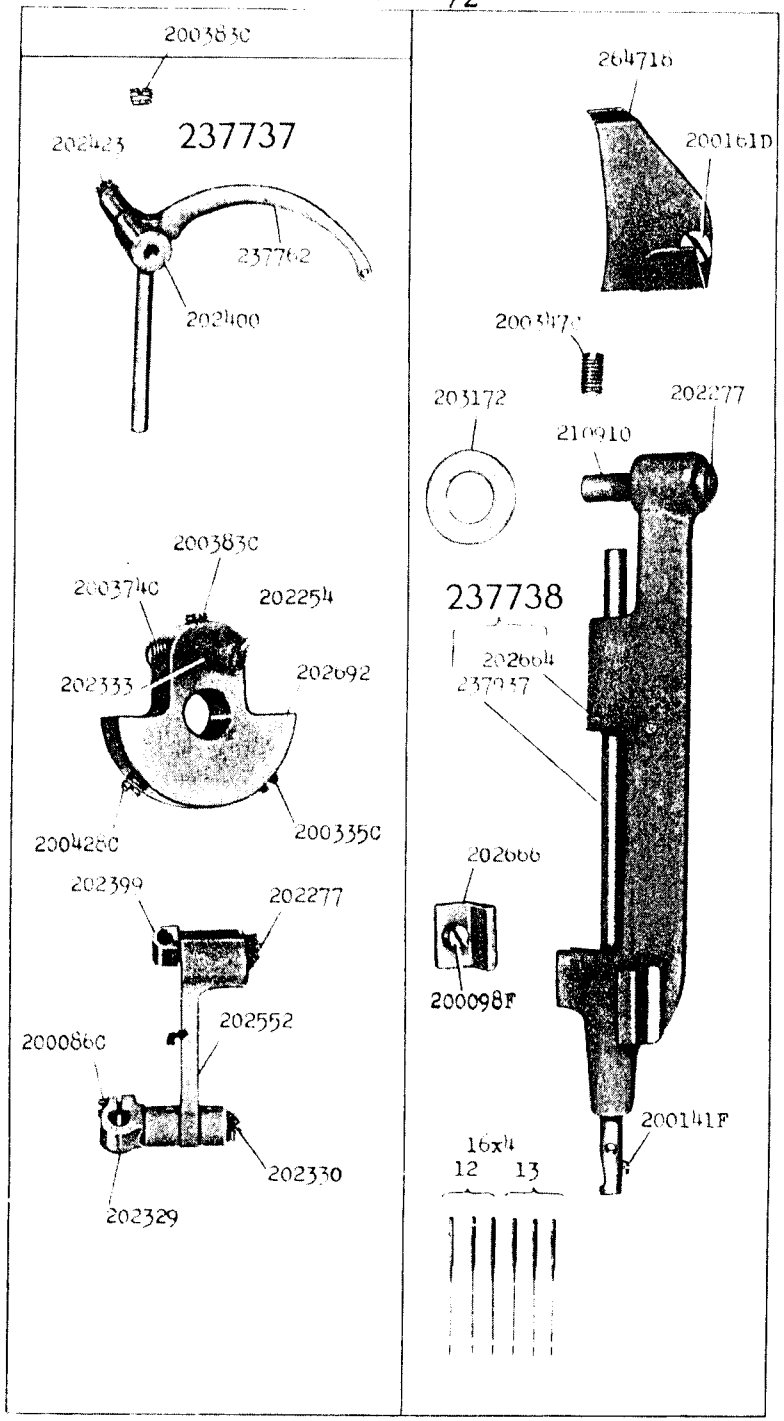

15748 - 1/4

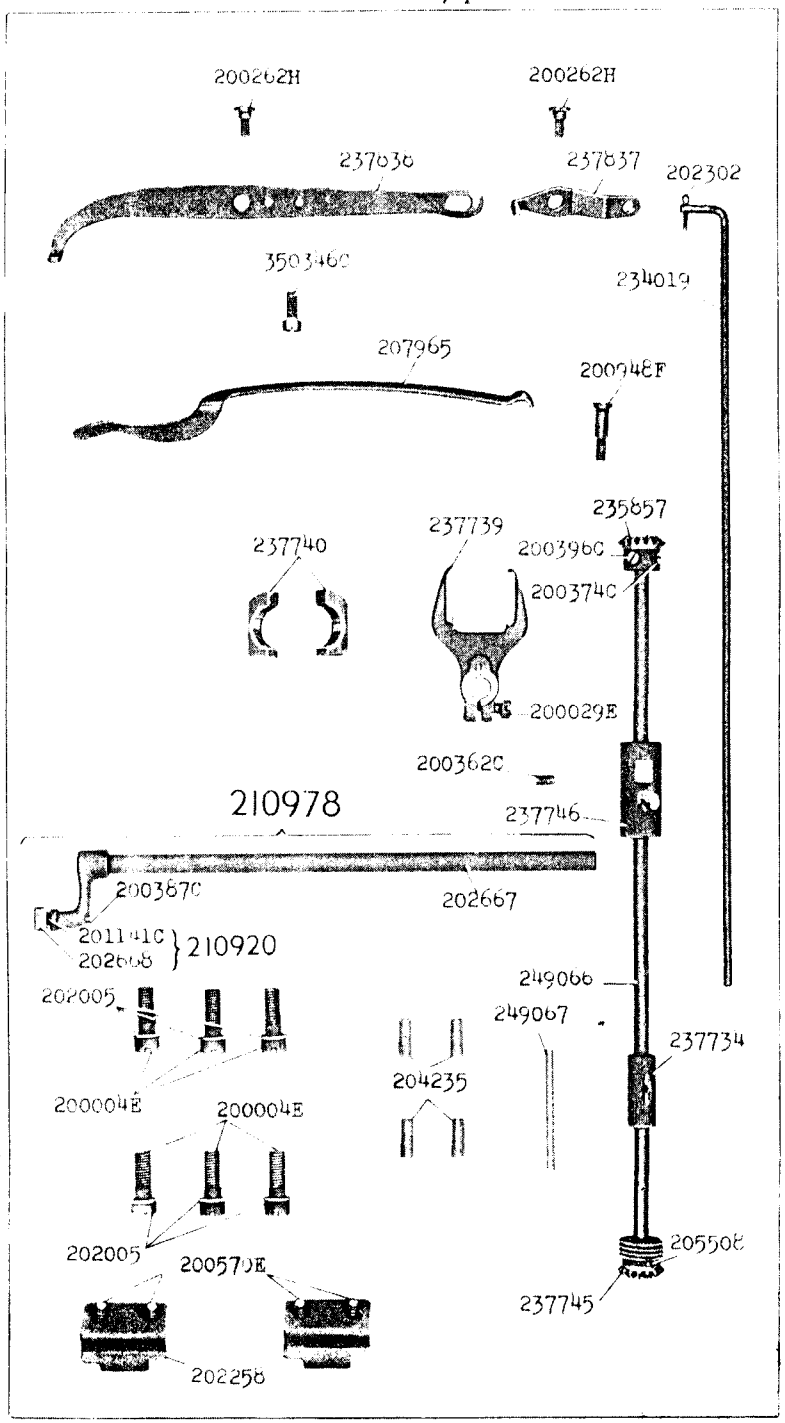

15749

249181 .045

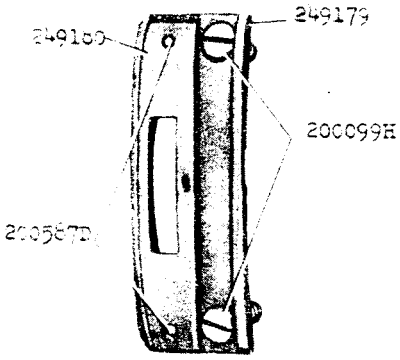

249189 .045

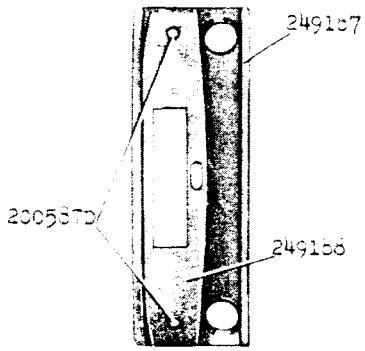

249183 .035

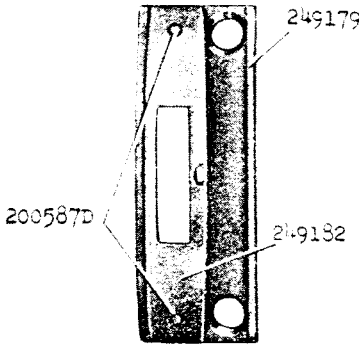

15751 - 1/6

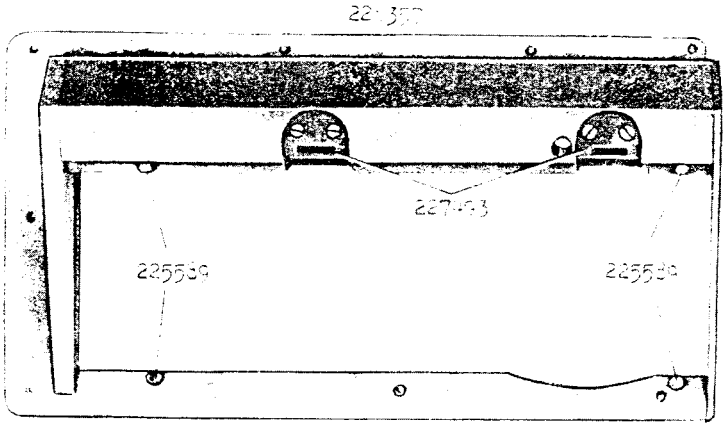

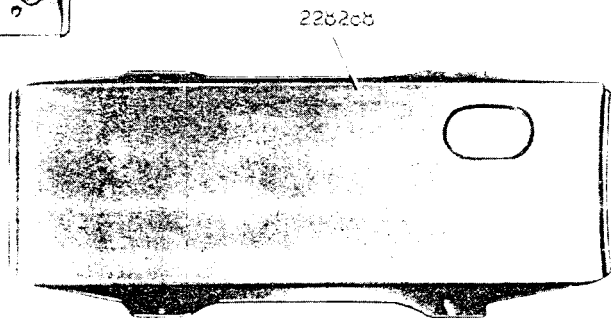

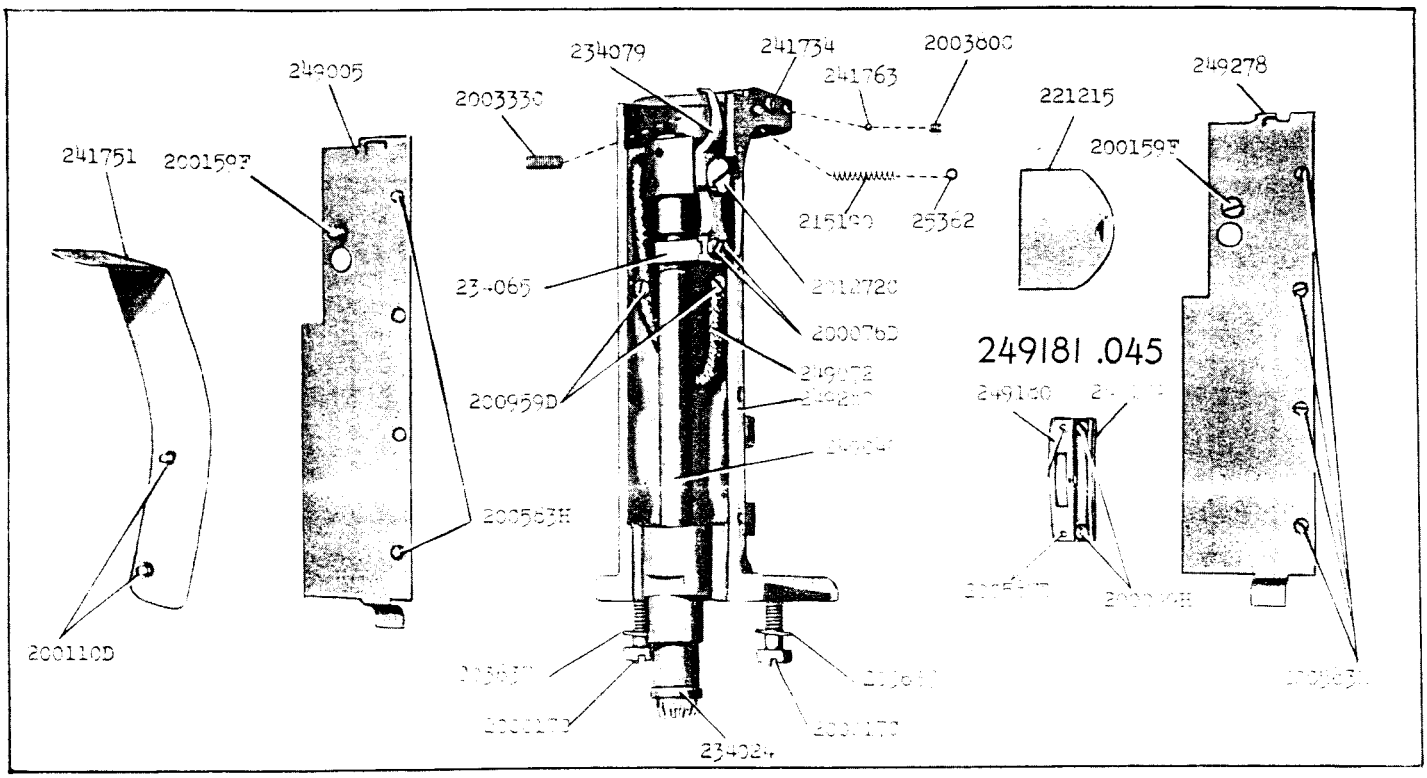

15752 - 3/8

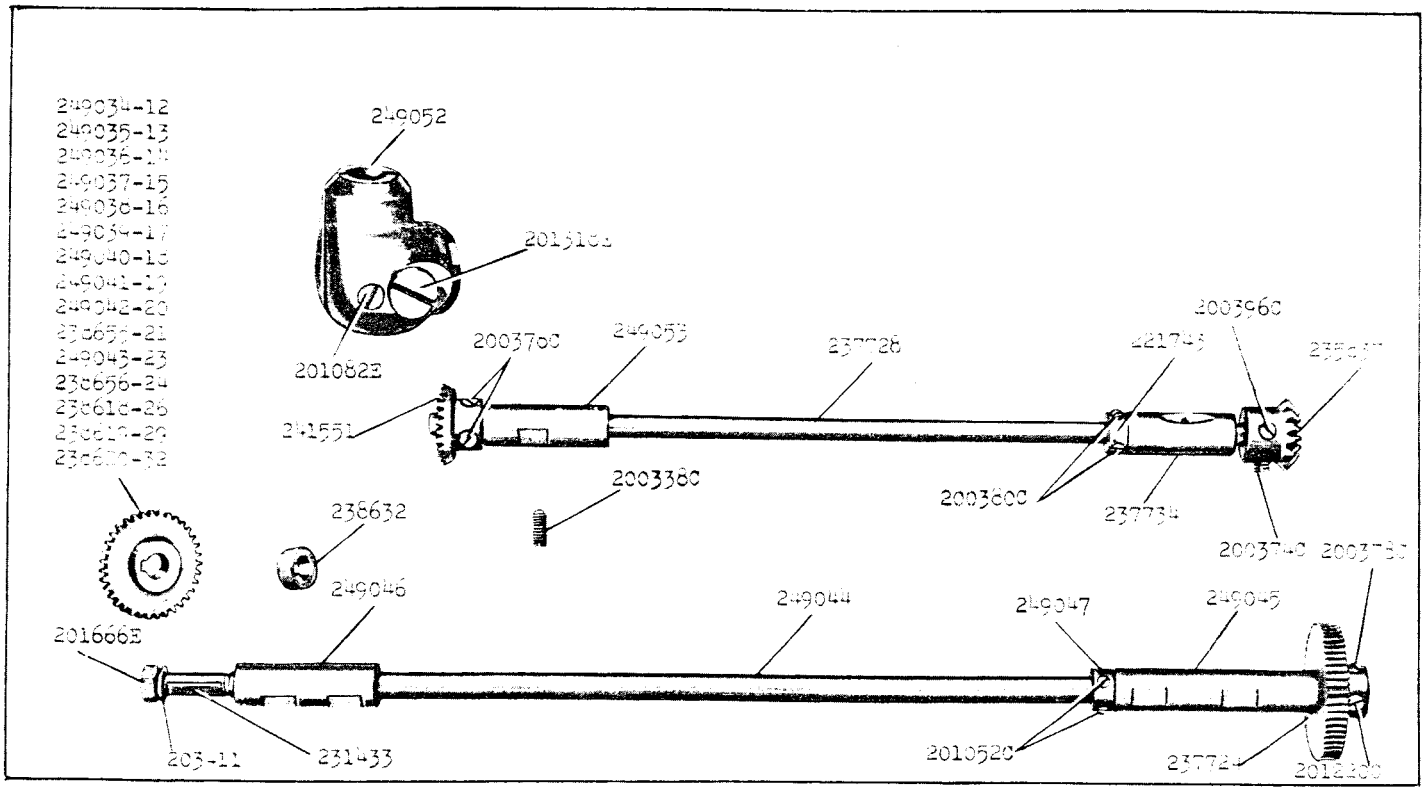

15753 - 3/8

15754 - 5/8

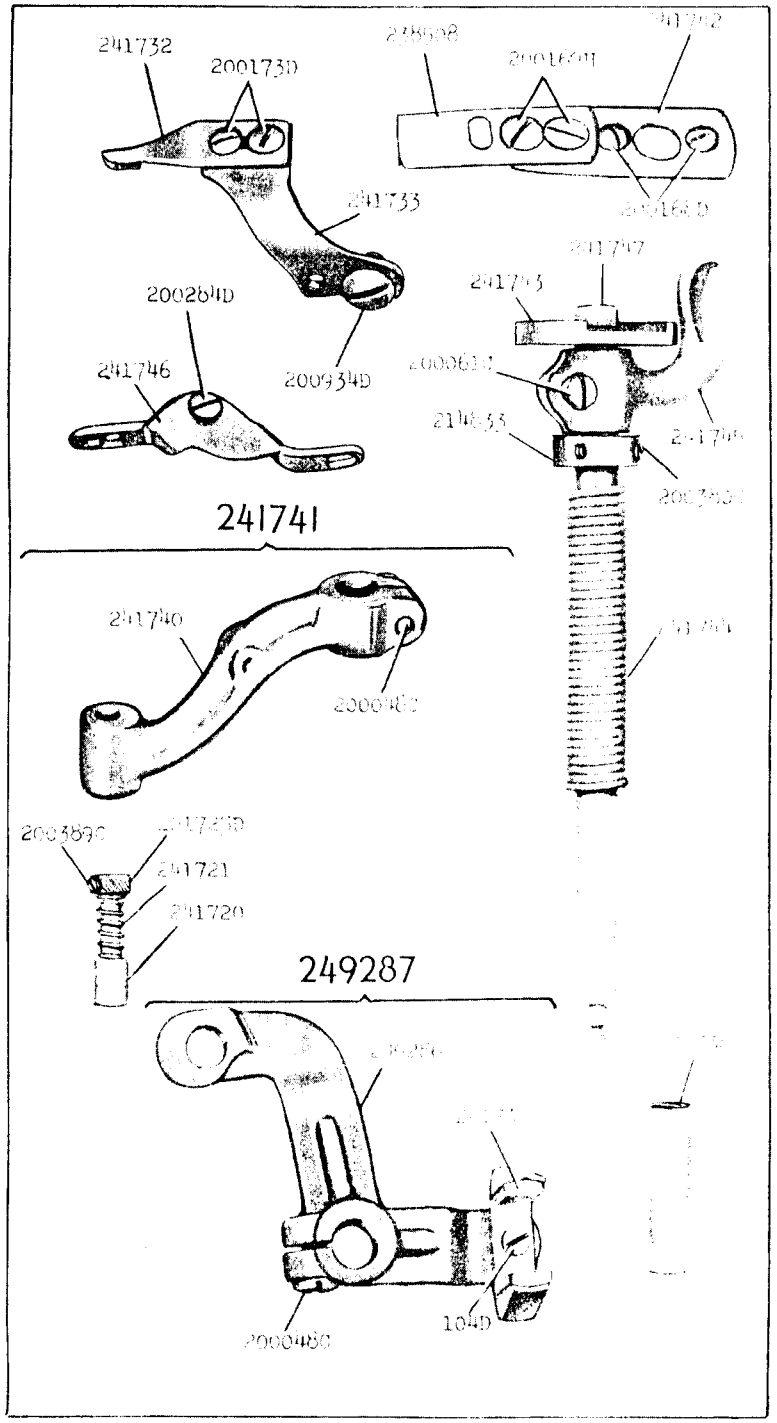

15755 - 1/3

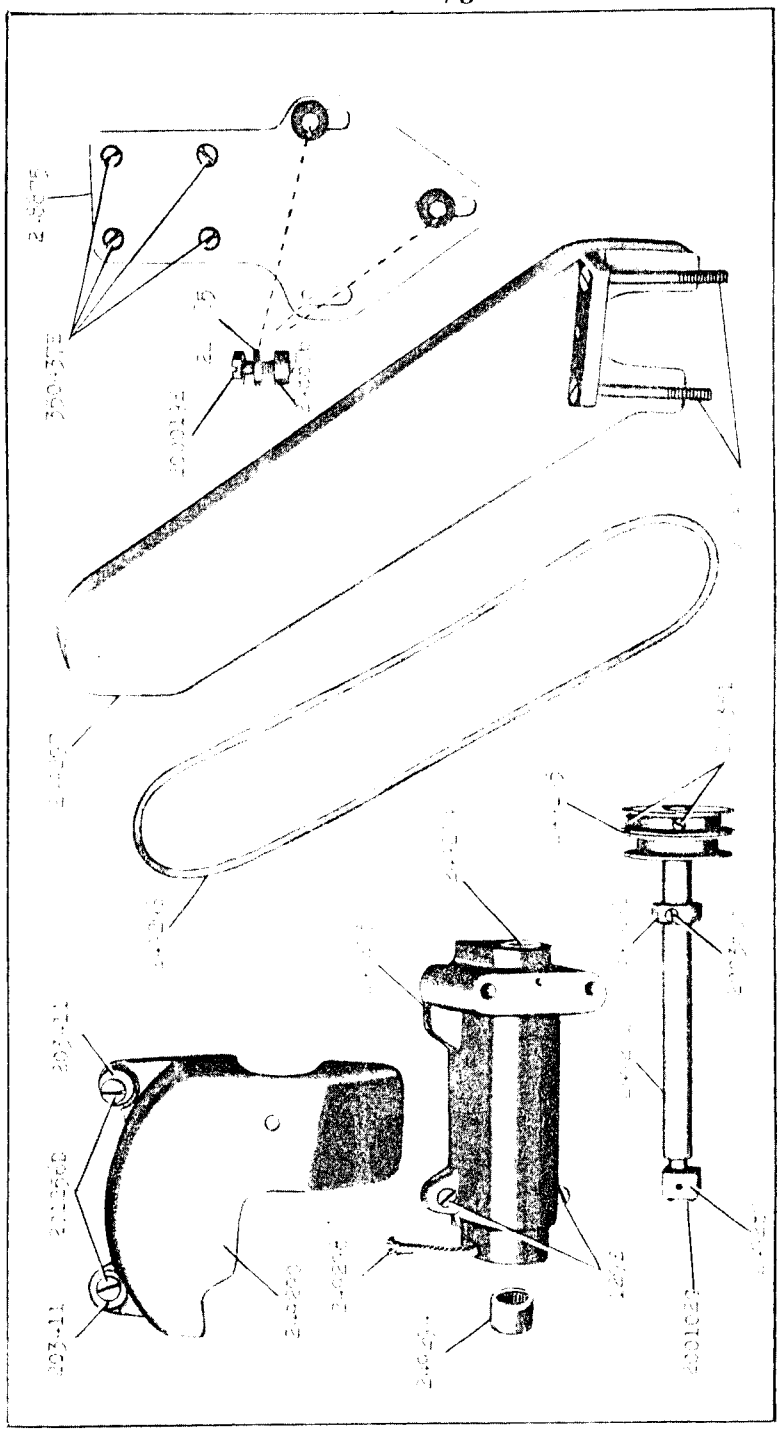

15756 - 1/4

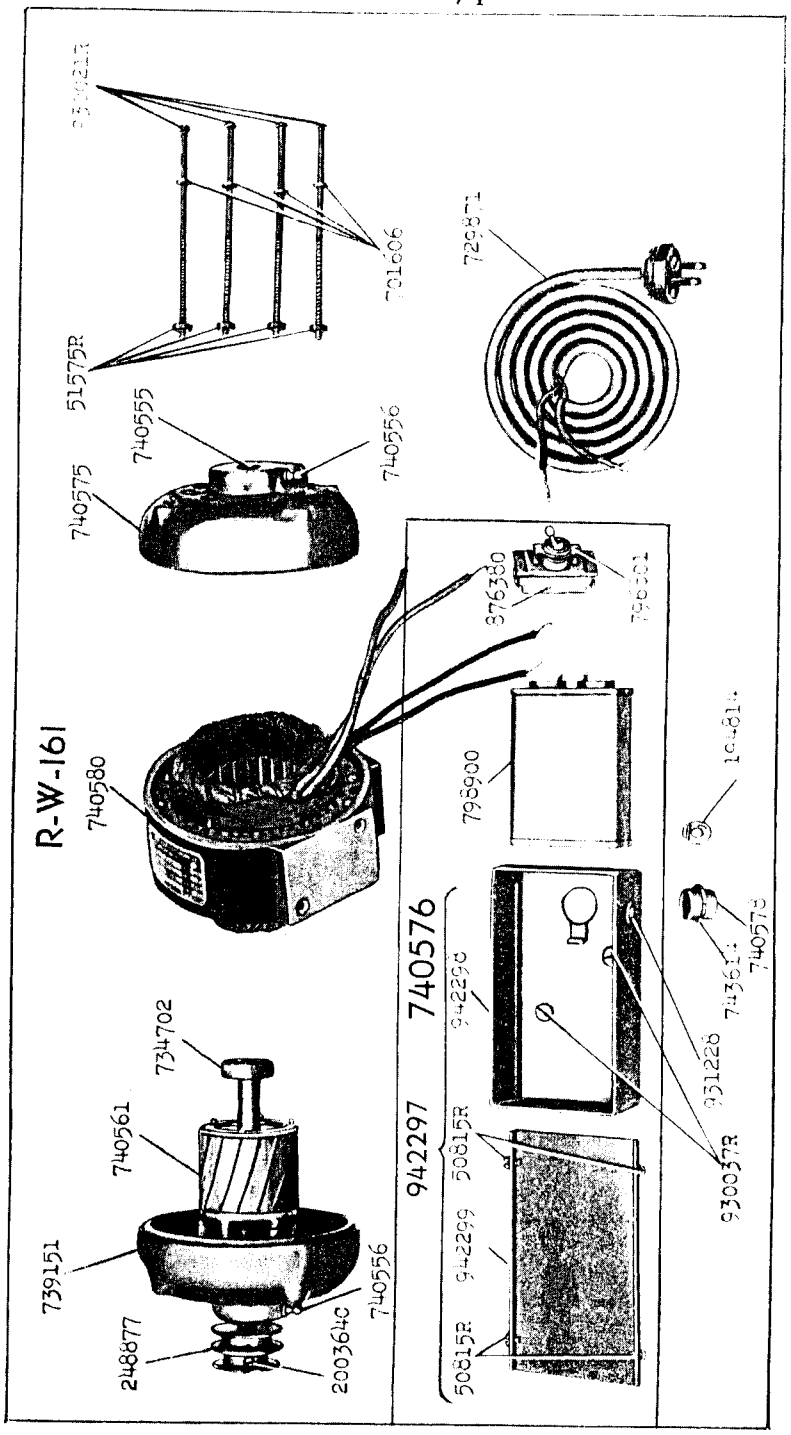

15757 - 1/2

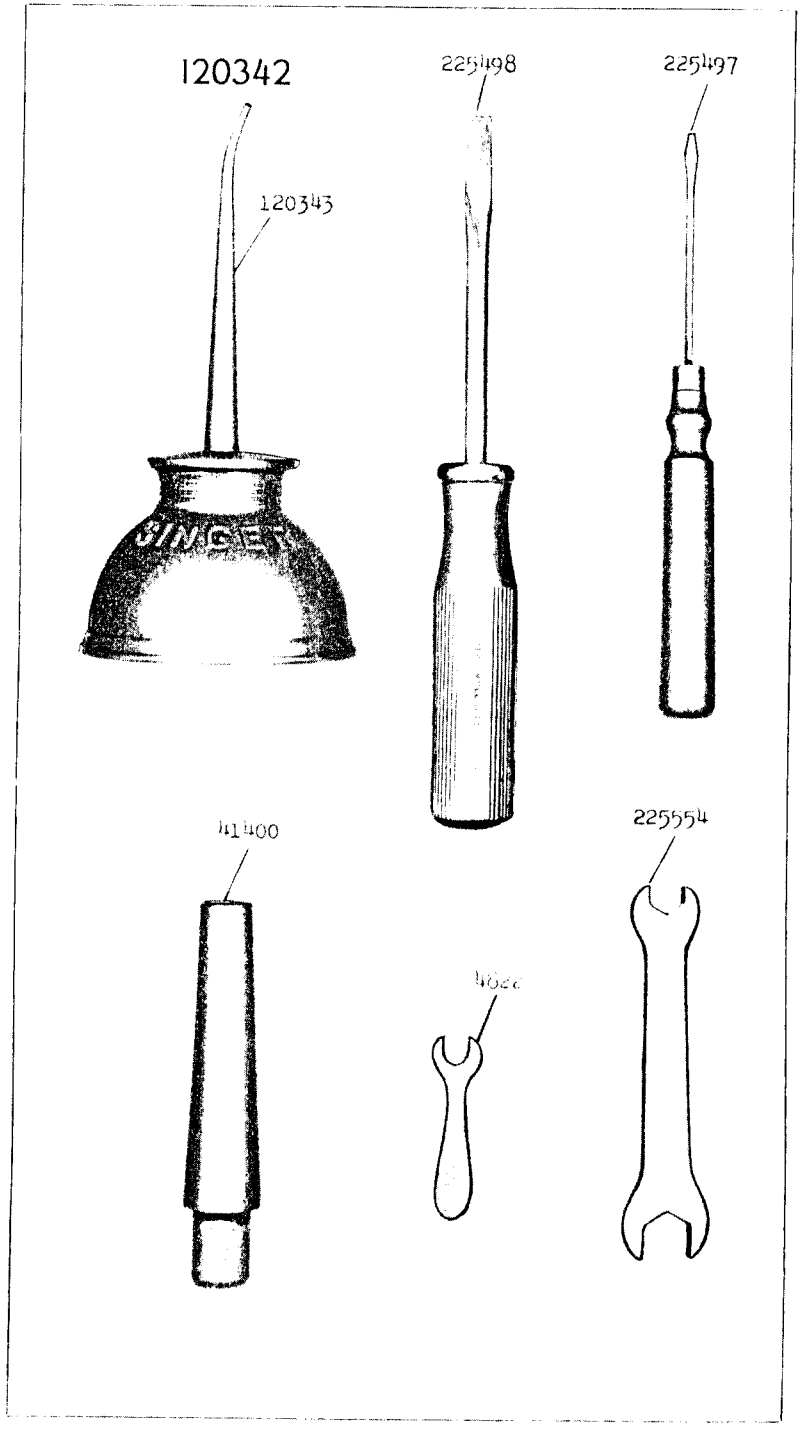

16615 - 1/2

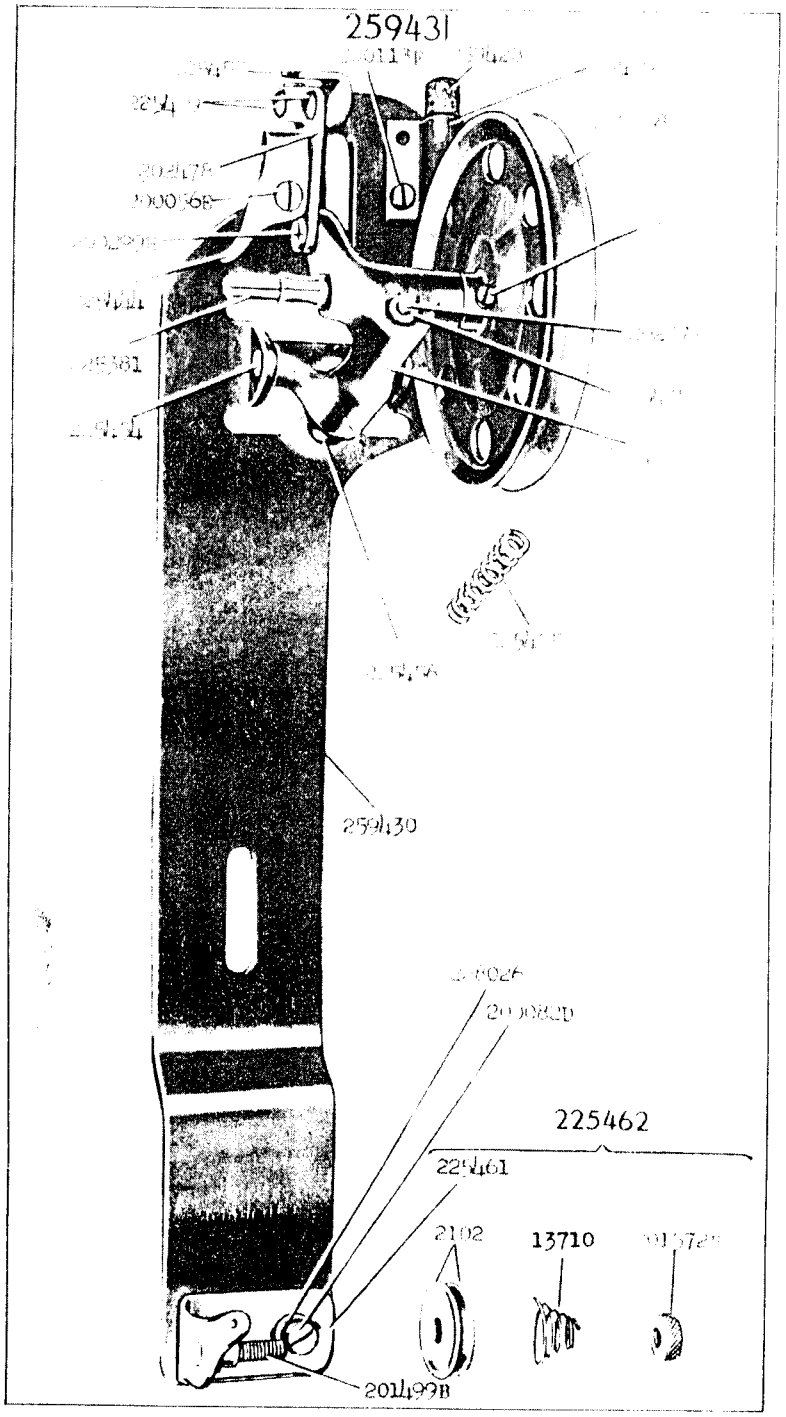

16643 - 3/8

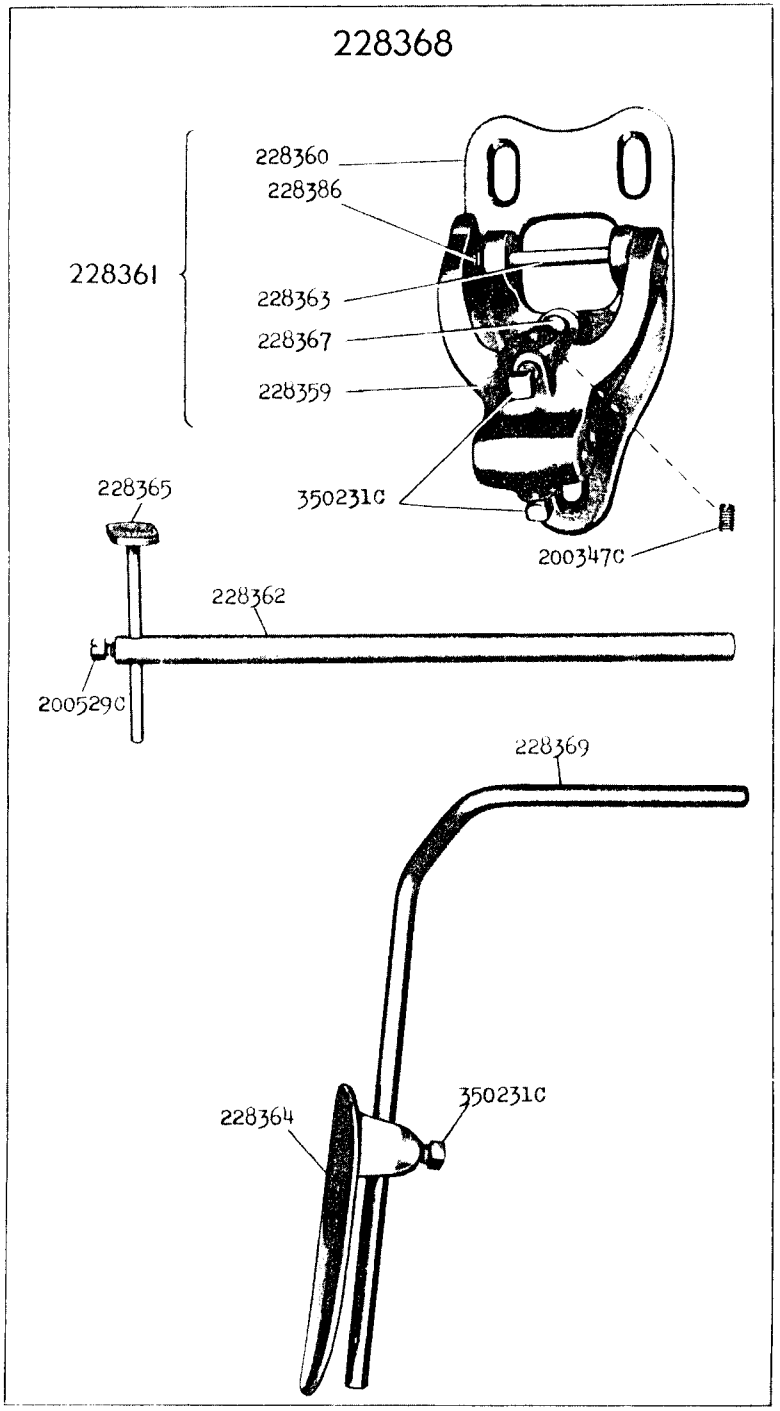

17640 - 1/3

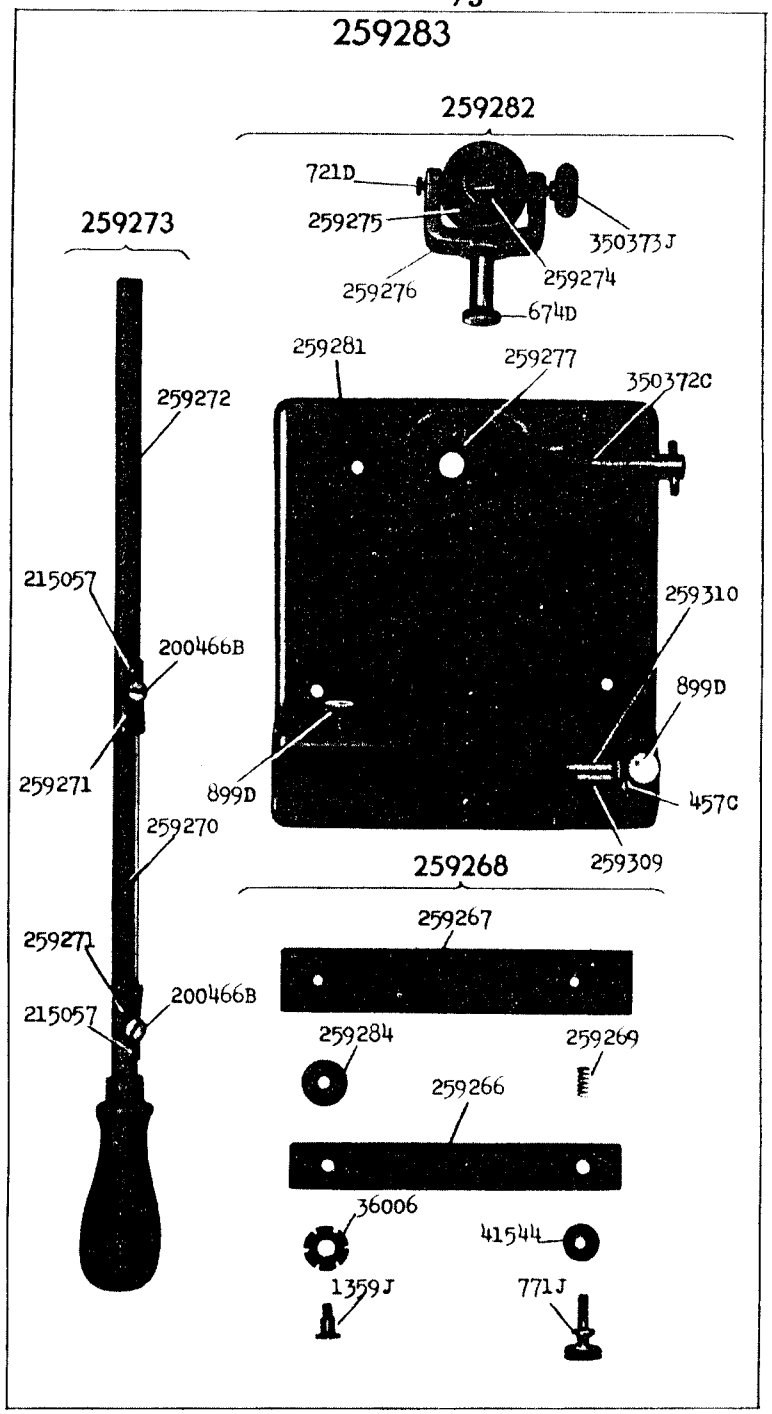
259283
259282
721D
259275
350373J
259276
259274
674D
259273
259281
259277
350372C
259272
215057
259310
200466B
899D
259271
899D
457C
259270
259309
259268
259267
259271
200466B
215057
259284
259269
259266
36006
41544
1359J
771J