SINGER
112W137

Form 2678w
(141)
Printed in U. S. A.

LIST
OF
PARTS

MACHINE No. 112w137

THE SINGER MANUFACTURING COMPANY

Copyright, U. S. A., 1939, 1940 and 1941
by The Singer Manufacturing Co.
All Rights Reserved for all Countries

INDEX

Page

Accessories 14

Bobbin Winder 14

Knee Lifter 15

Machine No.112w137 5

Miscellaneous Parts 17

Numerical List of Parts 19

Thread Unwinder 16

Treadle 16

INSTRUCTIONS FOR ORDERING

In ordering from this list, use ONLY the PART number in the FIRST column.

The number stamped on a Sewing Machine Part is the number of the Single Part only, except when the part includes Set Screws, Clamping Screws, Studs and Rollers Spun on, Small Wires riveted, or Parts soldered together, etc.,which it is necessary to furnish in combination.

Every combination of parts sent out has its specific number which, although not stamped on Parts (except in above case), must be used when ordering the combination.

Each number always indicates the SAME PART in whatever list it appears, or for whatever Machine.

The letters after some of the numbers indicate the style of finish only, as follows:

A. Hardened, Polished, Nickel Plated and Buffed.
B. Polished, Nickel Plated and Buffed.
C. Hardened only.
D. Polished only.
E. Soft, not polished.
F. Hardened and Polished.
H. Blued.
J. Nickel Plated only.
R. Merlized.
X. Black Oxide.
XC. Hardened and Black Oxide.
Y. Blade Nickel only.

These letters MUST BE USED when they appear in the list and AFTER the number, as in the list.

In this series:
200001 to 201500 and 350001 to 351500 are Screw Numbers.
201501 to 201800 and 351501 to 351800 are Nut Numbers.
201801 to 202000 and 351801 to 352000 are Roller Numbers.
202001 to 350000 are Numbers of Machine Parts.

The figures in the second column refer only to the plate in which the illustration of the part is shown and are NOT TO BE USED in ordering.

Two or more numbers over a cut indicate that the difference between such parts is not visible in an illustration.

Parts marked with an asterisk (*) are furnished when repairs are made at the factory.

LIST OF PARTS COMPLETE
FOR

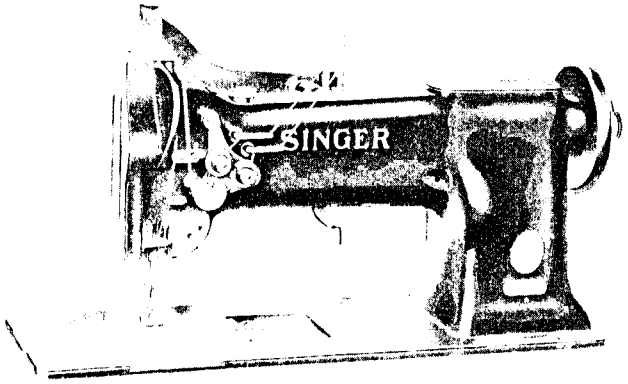

MACHINE No. 112w137

TWO NEEDLE. HIGH SPEED. DROP FEED.

FOR STITCHING ON FACINGS AND CUTTING POCKET HOLES IN GARMENTS AT ONE OPERATION.

SPECIALLY FITTED FOR LIGHT FABRICS OR SLEAZY MATERIAL.

IN GAUGES FROM 3/16 TO 3/4 INCH.

No.	Plate	Name
*248290	-----	Arm with 202135
224002	16259	" Cap
200278H	16259	" " Screw
202248	16259	" " " Washer
204235	16260	" Position Pin (2)
200004E	16260	" Screw (3)
202005	16260	" " Washer (3)
248277	16259	" Shaft with 200357E and 224392
240802	16259	" " Bushing (back) with 202244
202244	16259	" " " " Oil Packing (wick)
200338C	16259	" " " " Set Screw
207080	16259	" " " (front) with 202244
202244	16259	" " " " Oil Packing (wick)
200502B	16259	" " " " " " Thumb Screw
200341C	16259	Arm Shaft Bushing (front) Set Screw

No.	Plate	Name
224103	16260	Arm Shaft Connection Belt
224200	16260	" " " " Pulley with 200327C,200602E and two 202253
200602E	16260	Arm Shaft Connection Belt Pulley Position Screw
200327C	16260	Arm Shaft Connection Belt Pulley Set Screw
202253	16260	Arm Shaft Connection Belt Pulley Spring Flange
224138	16262	Arm Shaft Connection Belt Timing Collar with 200113F
200113F	16262	Arm Shaft Connection Belt Timing Collar Set Screw
224139	16262	Arm Shaft Connection Belt Timing Plate
200164B	16262	" " " " " " Screw (2)
224392	16259	Arm Shaft Oil Packing (wick)
200357E	16259	" " " " Stop Screw
224144	16267	Attachment Slide Plate with 213479 and 236061
236061	16267	Attachment Slide Plate Friction Slide
213479	16267	" " " " " Spring
235096	16259	Balance Wheel (disc) (belt groove 2-1/2 in.diam.) with 200328C and 200335C
200328C	16259	Balance Wheel Position Screw
200335C	16259	" " Set Screw
*224105	-----	Bed with 203376
202258	16260	" Hinge Connection (2)
200570E	16260	" " " Screw (4)
54897	16262	" Oil Cup
223852	16267	" Slide (back)
223811	16267	" " " Stop
223812	16267	" " " " Spring
223853	16267	" " (front),for use with Throat Plates in gauges from 3/16 to 1/2 inch
224043	16267	Bed Slide (front),for use with Throat Plates in gauges from 17/32 to 3/4 inch
203470	16247	Bobbin (2)
*236691	-----	" Case
203648	16247	" " Latch
*202056	-----	" " " Pin
203473	16247	" " " Plunger
203474	16247	" " " Spring
241674	16247	" " Oiling Felt
241675	16247	" " " " Retainer
350405C	16247	" " " " " Screw
224004	16248	" " Opener
224005	16248	" " " Lever with 201349C, 201542C and 203101

No.	Plate	Name
201349C	16248	Bobbin Case Opener Lever Driving Screw Stud
201542C	16248	Bobbin Case Opener Lever Driving Screw Stud Nut
203101	16248	Bobbin Case Opener Lever Driving Screw Stud Oil Packing (wick)
265088	16248	Bobbin Case Opener Lever Hinge Stud with 202277
202277	16248	Bobbin Case Opener Lever Hinge Stud Oil Packing (wick)
200364C	16248	Bobbin Case Opener Lever Hinge Stud Set Screw
223623	16248	Bobbin Case Opener Lever Link
200118D	16248	" " " Screw
236083	16247	" " Tension Spring
201016F	16247	" " " " Regulating Screw
200594C	16247	" " " " Screw
203216	16247	" " Washer (cloth)
236692	16247	Bobbin Case complete,Nos.200594C,201016F, 202056,203216,203473,203474,203648, 236083,236691,241674,241675 and two 350405C
237804	16267	Face Plate
202135	16267	" " Position Pin
200473B	16267	" " Thumb Screw
224050	16261	Feed Bar with 200336E and 201535E
224051	16261	" " 224050 with 200040C,224052 and 225837
350393C	16261	Feed Bar Hinge Screw (driving)
201518E	16261	" " " " Nut
248383	16268	" Dog
200106E	16268	" " Screw (2)
200336E	16261	" " Support Screw
201535E	16261	" " " " Nut
224106	16260	" Driving Connection with 200049D and 202277
201407C	16260	Feed Driving Connection Hinge Screw
201517E	16260	" " " " " Nut
206758	16260	" " " " " Oil Packing (wick)
202277	16260	Feed Driving Connection Oil Packing (wick)
200049D	16260	Feed Driving Connection Pinch Screw
202300	16260	" " Eccentric Regulating Bracket
224140	16260	" " " " " 202300 with 224200,two each 201408C and 201525E
201408C	16260	Feed Driving Eccentric Regulating Bracket Hinge Screw

No.	Plate	Name
201525E	16260	Feed Driving Eccentric Regulating Bracket Hinge Screw Nut
202301	16260	Feed Driving Eccentric Regulating Bracket Plunger
202595	16260	Feed Driving Eccentric Regulating Bracket Plunger Spring
200607C	16260	Feed Driving Eccentric Regulating Bracket Plunger Spring Stop Screw
201408C	16260	Feed Driving Eccentric Regulating Bracket Stop Screw
201525E	16260	Feed Driving Eccentric Regulating Bracket Stop Screw Nut
200429C	16260	Feed Driving Eccentric Regulating Screw
200383C	16260	" " " " " Check Screw
223650	16261	Feed Driving Rock Shaft
223651	16261	" " " " 223650 with 201518E,224051 and 350393C
224141	16261	Feed Driving Rock Shaft Crank with 200019E
200019E	16261	Feed Driving Rock Shaft Crank Pinch Screw
202625	16261	" " " " Stop Collar with two 200383C (2)
200383C	16261	Feed Driving Rock Shaft Stop Collar Set Screw
224154	16262	Feed Lifting Cam with 201220C
224052	16261	" " " Fork with 200173D and 223655
200040C	16261	Feed Lifting Cam Fork Screw
225837	16261	" " " " " Washer
223655	16261	" " " Oiling Felt
200173D	16261	" " " " " Screw
201220C	16262	" " " Set Screw
224142	16259	" Regulating Spindle with 202311,202443 and 202619
*202311	-----	Feed Regulating Spindle Head
202443	16259	" " " " Pin
202619	16259	" " " " Position Pin
*224016	16247	Hook (sewing)
224115	16247	" 224016 with 224025,224100,two each 200590H and 201253F
237204	16247	Hook and Bobbin Case complete,Nos.224115 and 236692
224019	16248	Hook Bushing (lower) (bronze)
200364C	16248	" " " Set Screw
224020	16248	" " (upper) (bronze)
200446C	16248	" " " Position Screw
223867	16262	" Driving Gear (spiral) with 200362C and 201222C (2)
201222C	16262	Hook Driving Gear Position Screw

No.	Plate	Name
200362C	16262	Hook Driving Gear Set Screw
224021	16248	" " Pinion (spiral) with two 200382C
200382C	16248	Hook Driving Pinion Set Screw
224022	16248	" " " Thrust Washer
224110	16262	" " Shaft
224111	16262	" " " Bushing with 202244
202244	16262	" " " " Oil Packing (wick)
200327C	16262	Hook Driving Shaft Bushing Set Screw
224112	16262	" " " Connection Belt Pulley with 202253 and two 201254C
201254C	16262	Hook Driving Shaft Connection Belt Pulley Set Screw
202253	16262	Hook Driving Shaft Connection Belt Pulley Spring Flange
224100	16247	Hook Gib
201253F	16247	" " Screw
223849	16248	" Saddle (left) with 200009E
224023	16248	" " 223849 with 200364C,200446C, 224019 and 224020
223850	16249	Hook Saddle (right) with 200009E
224024	16249	" " 223850 with 200364C,200446C, 224019 and 224020
223680	16262	Hook Saddle Bearing (left)
200327C	16262	" " " " Set Screw
223681	16262	" " " (right)
200335C	16262	" " " " Set Screw
223682	16262	" " Oil Guard
223814	16262	" " " " Felt
200096D	16262	" " " " Screw (2)
200009E	16248	" " Pinch Screw
200006E	16248	" " Screw (2)
225585	16248	" " " Washer (2)
237193	16248	Hook Saddle (left) complete,Nos.200118D, 200364C,223623,224004,224005,224021 to 224023,237204 and 265088
240033	16249	Hook Saddle (right) complete,Nos.200118D, 200364C,223623,224004,224005,224021, 224022,224024,237204 and 265088
224025	16247	Hook Washer
200590H	16247	" " Screw
237837	16267	Knee Lifter Connection Lever
223684	16267	" " " " Lifting Rod with 202302
202302	16267	Knee Lifter Connection Lever Lifting Rod Cotter Pin
206628	16267	Knee Lifter Connection Lever Lifting Rod Spring

No.	Plate	Name
227227	16267	Knee Lifter Connection Lever Lifting Rod Spring Collar with 200113F
200113F	16267	Knee Lifter Connection Lever Lifting Rod Spring Collar Set Screw
248293	16267	Knee Lifter Lifting Lever
200262H	16267	" " " " Hinge Screw
248386	16265	Knife
240434	16265	" Bar
248295	16265	" " Angle Extension
200126D	16265	" " " " Screw (2)
221417	16259	" " Driving Eccentric with 200382C and 200437C
202890	16265	Knife Bar Driving Eccentric Fork with 200382C and 201464C
201464C	16265	Knife Bar Driving Eccentric Fork Position Screw
200382C	16265	Knife Bar Driving Eccentric Fork Set Screw
200437C	16259	Knife Bar Driving Eccentric Position Screw
200382C	16259	Knife Bar Driving Eccentric Set Screw
202891	16265	" " " Shaft Crank with 200694F and 201525E
200694F	16265	Knife Bar Driving Shaft Crank Screw Stud
201525E	16265	" " " " " " " Nut
237808	16265	Knife Bar Guide Block
200011D	16265	" " " " Screw (2)
200330C	16263	" " " Screw
201531E	16263	" " " " Nut
202343	16264	" " Lifting Spring
234044	16264	" " " " Plunger
237809	16265	" " Position Bracket
201387F	16265	" " " " Screw (2)
248280	16265	" Holder
200190D	16265	" " Screw (2)
248387	16265	" " Switch-in Handle
200076D	16265	" Screw (2)
248296	16265	" Switch-in Lever
248297	16265	" " " Connection Stud
237837	16265	" " " " Lever
200262H	16265	" " " " " Hinge Screw
248302	16265	Knife Switch-in Lever Spring
244039	16265	" Switch-out Handle
248298	16265	" " Lever
350325C	16265	" " " Hinge Screw
248299	16265	" " " Spring

No.	Plate	Name
248388	16263	Needle Bar and Holder, in gauges from 3/16 to 5/8 in., in steps of 1/32 in., with two 200141F
202552	16263	Needle Bar Connecting Link
264718	16263	" " " " Oil Guard
201183D	16263	" " " " " " Screw
202333	16263	" " " " Stud with 202254
202254	16263	Needle Bar Connecting Link Stud Oil Packing (wick)
200374C	16263	Needle Bar Connecting Link Stud Set Screw
200383C	16263	" " " " " " "
*206891	-----	" " " Stud
202329	16263	" " " " 206891 with 200086C and 202330
202330	16263	Needle Bar Connecting Stud Oil Packing (wick)
200086C	16263	Needle Bar Connecting Stud Pinch Screw
202692	16263	" " Crank with 200335C, 200374C, 200383C, 200428C and 202333
248283	16263	Needle Bar Crank 202692 with 202329, 202399, 202400, 202552 and 223881
203172	16263	Needle Bar Crank Friction Washer
200428C	16263	" " " Position Screw
200335C	16263	" " " Set Screw
248284	16263	" " Frame
237815	16263	" " " Position Bracket with 200330C and 201531E
350129E	16263	Needle Bar Frame Position Bracket Screw (2)
207069	16263	Needle Bar Frame Position Pin
200118D	16263	" " " Screw
210910	16263	" " " Stud with 202277
202277	16263	" " " " Oil Packing (wick)
200347C	16263	" " " " Set Screw
200141F	16263	" Set Screw
244033	16264	Presser Bar (hollow)
202335	16264	" " 244033 with 200074F
207072	16264	" " Bushing (2)
200352C	16264	" " " Set Screw (2)
202671	16264	" " Lifter
200653C	16264	" " " Hinge Screw
207963	16264	" " Lifting Releasing Lever Bracket
200975F	16264	Presser Bar Lifting Releasing Lever Bracket Guide Screw
206608	16264	Presser Bar Lifting Releasing Lever Bracket Spring
237820	16264	Presser Bar Position Guide

No.	Plate	Name
202338	16264	Presser Bar Position Guide Lever with 200086F
200086F	16264	Presser Bar Position Guide Lever Pinch Screw
200352C	16264	Presser Bar Position Guide Set Screw
240172	16267	" " Spring (flat)
210949	16264	" " " Bracket with 200086C
200086C	16264	" " " " Pinch Screw
200538C	16267	" " " Regulating Screw
200948F	16267	" " " Support Screw
248390	16268	Presser Foot,46 needle hole,in gauges from 3/16 to 3/8 in.,in steps of 1/32 inch
200074F	16264	Presser Foot Screw
223881	16263	Take-up Lever
202399	16263	" " Driving Stud with 202277
202277	16263	" " " " Oil Packing (wick)
202400	16263	Take-up Lever Hinge Stud with 202423
202423	16263	" " " " Oil Packing (wick)
200363C	16263	Take-up Lever Hinge Stud Set Screw
202401	16264	" " Oiling Felt
200132E	16264	" " " " Screw
223702	16266	Tension Bracket with two each 201224B and 236060
200159F	16266	Tension Bracket Screw
223705	16266	Tension Bracket complete,Nos.200978H, 201199F,223702,223703,223706,237174, two each 13710,200309E,204271,223704, three 201572B and four 244048
244048	16266	Tension Disc
236060	16266	" " Position Pin
223703	16266	" Release Lever
236005	16264	" " " Rod
200309E	16266	" " " Screw
223704	16266	" " Plunger
204271	16266	" " Washer
13710	16266	" Spring
201224B	16266	" Stud
201572B	16266	" Thumb Nut
223706	16266	Thread Controller Disc
200978H	16266	" " " Screw
237174	16266	" " Spring
241360	16266	" " " Stop
200132E	16266	" " " " Screw
201199F	16266	" " Stud with 204925
200061C	16266	" " " Set Screw
204925	16266	" " " Washer
201572B	16266	" " " Thumb Nut

No.	Plate	Name
224028	16259	Thread Guide
210955	16266	" " (upper)
210954	16266	" " (lower)
200582H	16266	" " Screw (3)
240034	16266	" Retainer (2)
210956	16266	" " Bracket with 200397H
200582H	16266	" " " Screw (2)
200366H	16266	" " Set Screw (2)
210993	16266	" " Sleeve
223844	16266	" " Spring
248287	16266	" " Stud
210958	16266	" " " Collar
248288	16266	" " " " (wide)
200397H	16266	" " " Set Screw
248289	16266	Thread Retainer (lower) (for two threads) complete,Nos.210956,210958,210993, 223844,248287 and 248288
248392	16268	Throat Plate Body,46 needle hole,for needle sizes 16 and 18,in gauges from 3/16 to 3/8 in.,in steps of 1/32 inch
200161D	16268	Throat Plate Clamp Screw
248393	16268	" " Knife Cutting Plate,46 needle hole,for needle sizes 16 and 18,for gauges from 3/16 to 3/8 in.,in steps of 1/32 in.State gauge required.
200587D	16268	Throat Plate Knife Cutting Plate Screw
203376	16268	" " Position Pin
691F	16268	" " Screw
248394	16268	Throat Plate complete,46 needle hole,for needle sizes 16 and 18,in gauges from 3/16 to 3/8 in.,in steps of 1/32 in., Nos.200587D,248392 and 248393

ACCESSORIES

No.	Plate	Name
203470	16247	Bobbin (10)
*225482	-----	" Case Screw Driver Blade
*225483	-----	" " " " Handle
225497	13067	Bobbin Case Screw Driver complete,Nos. 225482 and 225483
248386	16265	Knife (3)
126 x 9	16263	Needles,twelve,size 16
224121	16644	Drip Pan,20 in.long,with four 1 in.wire nails
41400	13067	Machine Rest Pin (wood)
120342	13067	Oiler (copper plated) with 120343
120343	13067	" Spout,3-1/2 in.long
225498	13067	Screw Driver (7-1/4 in.long)
248393	16268	Throat Plate Knife Cutting Plate
225554	13067	Wrench (steel)

BOBBIN WINDER

(SWINGING AUTOMATIC, RIGHT HAND)

259428	16615	Brake (leather)
259429	16615	" Clamp
200113F	16615	" " Screw
225453	16615	Frame with 202277 and 225438
225454	16615	" Hinge Pin
202277	16615	" Oil Packing (wick)
225438	16615	" " Well Cap
225455	16615	" Spring
225456	16615	" " Plunger
225368	16615	Pulley with 200380C
200380C	16615	" Set Screw
225381	16615	Spindle
225444	16615	Stop Latch
200056E	16615	" " Screw
225458	16615	" " Thumb Lever
225459	16615	" " " " Hinge Stud
225459	16615	" " " " Joint Stud
202478	16615	" " Trip Lever
200299H	16615	" " " " Hinge Screw

No.	Plate	Name
225461	16615	Tension Bracket with 201499B
200082D	16615	" " Screw
228026	16615	" " " Washer
2102	16615	" Disc
13710	16615	" Spring
201499B	16615	" Stud
201572B	16615	" " Thumb Nut
225462	16615	Bobbin Winder Tension Bracket complete, Nos.13710,201572B,225461 and two 2102
259430	16615	Bobbin Winder and Tension Bracket Base
259431	16615	Universal Bobbin Winder complete,Nos. 200056E,200082D,200113F,200299H,202478 225368,225381,225444,225453 to 225456, 225458,225462,228026,259428 to 259430, two each 225459 and wood screws 3/4 in.,No.12,R.H.B.

KNEE LIFTER

228359	16643	Rock Lever with two 350231C
228360	16643	" " Bracket with 200347C and three wood screws 7/8 in.,No.12
228361	16643	Rock Lever Bracket 228360 with 228359, 228363,228367 and 228386
228362	16643	Rock Lever Extension with 200529C
350231C	16643	" " " Set Screw
228363	16643	" " Hinge Pin
228364	16643	" " Knee Plate with 350231C
228369	16643	" " " " Arm
350231C	16643	" " " " " Set Screw
350231C	16643	" " " " Set Screw
228365	16643	" " Rod
200529C	16643	" " " Set Screw
228386	16643	" " Spring
228367	16643	" " Stop Stud
200347C	16643	" " " " Set Screw
228368	16643	Knee Lifter complete,Nos.228361,228362, 228364,228365 and 228369

(Other Knee Lifter parts are listed with parts of machine head.)

THREAD UNWINDER

No.	Plate	Name
225259	16257	Spool Rest (for one spool) (flat) with 201018C
225257	16257	Spool Rest (for two spools) (flat) with 201018C
150203	16257	Spool Rest Cushion (felt)
225388	16257	" " Rod
200383C	16257	" " " Set Screw
201018C	16257	" " Set Screw
202490	16257	" Stand with 200383C
225391	16257	Thread Guide
201696J	16257	" " Lock Nut
225326	16257	" " Position Cup
225324	16257	" " Rod with 208E and 225322
208E	16257	" " " Screw
225322	16257	" " " Washer
259143	16257	Thread Unwinder (for three spools) complete, Nos. 201696J, 202490, 225257, 225259 225324, 225326, 225388, three each 150203 225391 and wood screws 7/8 in., No. 12

TREADLE

248300	16269	Treadle
232365	16269	" Chain (41-1/2 in. long) with two 202784 (2)
202784	16269	Treadle Chain Hook
17881	16269	" Shaft
14369	16269	" Stand
248301	16269	Treadle complete, Nos. 14369, 17881, 248300 and two wood screws 1-1/4 in., No. 12

MISCELLANEOUS PARTS

No.	Plate	Name
60913	16257	Spool Weight with 60914
60914	16257	" " Center Pin
225377	16257	" Wire (for small spools)
27739	16257	Thread Cone (wood)
225390	16257	" " Holder

Genuine Singer Needles should be used in Singer Machines. These Needles and their Containers are marked with the Company's Trade Mark "SIMANCO." 1

Needles in Containers marked "For Singer Machines" are not Singer made needles. 2

No.	Plate	Name
248390	16268	Presser Foot,46 needle hole,in gauges from 3/16 to 3/8 in.,in steps of 1/32 inch
248392	16268	Throat Plate Body,46 needle hole,for needle sizes 16 and 18,in gauges from 3/16 to 3/8 in.,in steps of 1/32 in., for 248394
248393	16268	Throat Plate Knife Cutting Plate,46 needle hole,for needle sizes 16 and 18 for gauges from 3/16 to 3/8 in.,in steps of 1/32 in.State gauge required, for 248394
248394	16268	Throat Plate complete,46 needle hole,for needle sizes 16 and 18,in gauges from 3/16 to 3/8 in.,in steps of 1/32 in., Nos.200587D,248392 and 248393
259143	16257	Thread Unwinder (for three spools) complete,Nos.201696J,202490,225257, 225259,225324,225326,225388,three each 150203,225391 and wood screws 7/8 in.,No.12
		Nos.259428 to 259430,for 259431
259428	16615	Bobbin Winder Brake (leather)
259429	16615	" " " Clamp
259430	16615	" " and Tension Bracket Base
259431	16615	Universal Bobbin Winder complete,Nos. 200056E,200082D,200113F,200299H,202478 225368,225381,225444,225453 to 225456 225458,225462,228026,259428 to 259430 two each 225459 and wood screws 3/4 in.,No.12,R.H.B.
264718	16263	Needle Bar Connecting Link Oil Guard
265088	16248	Bobbin Case Opener Lever Hinge Stud with 202277,for 237193 and 240033
350129E	16263	Needle Bar Frame Position Bracket Screw
350231C	16643	Knee Lifter Rock Lever Extension Set Screw,for 228359
350231C	16643	Knee Lifter Rock Lever Knee Plate Arm Set Screw,for 228359
350231C	16643	Knee Lifter Rock Lever Knee Plate Set Screw,for 228364
350325C	16265	Knife Switch-out Lever Hinge Screw
350393C	16261	Feed Bar Hinge Screw (driving),for 223651
350405C	16247	Bobbin Case Oiling Felt Retainer Screw, for 236692

13067 - 1/2

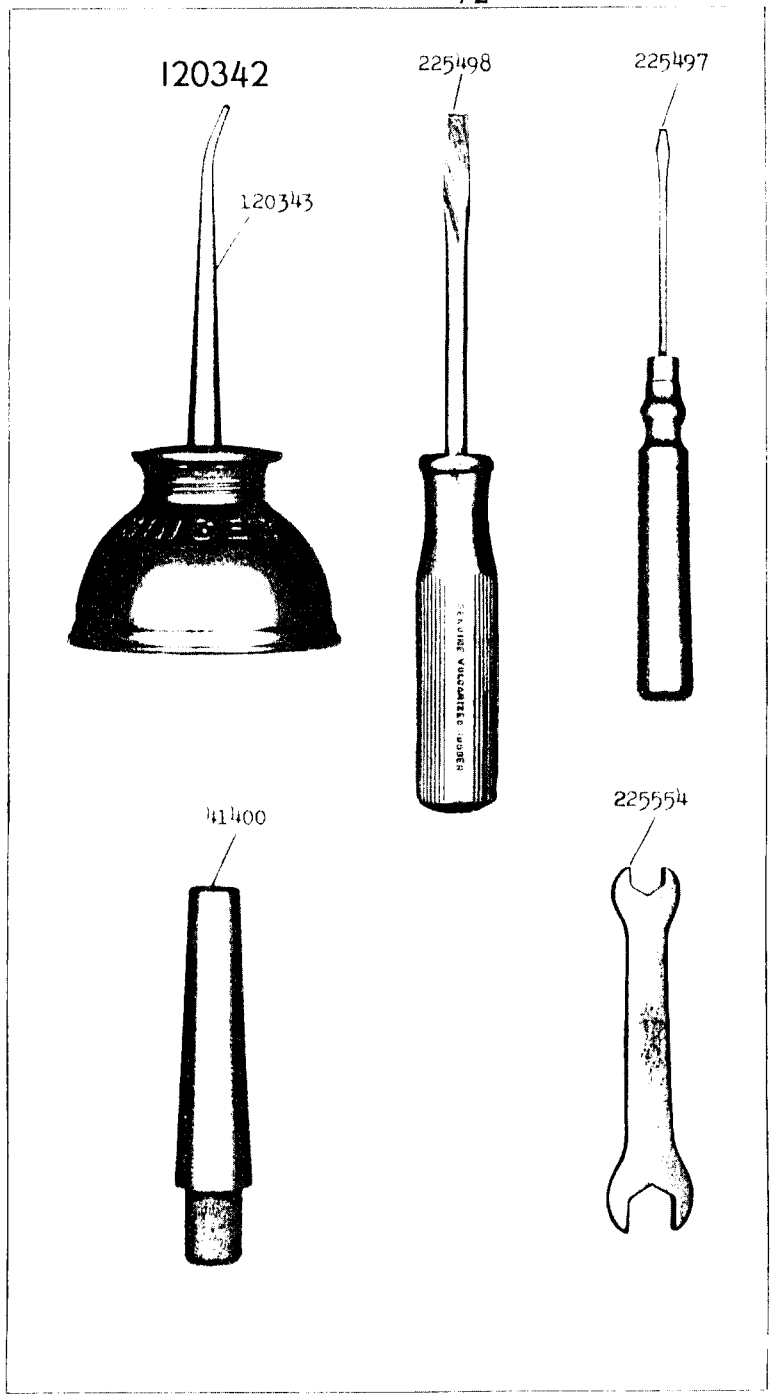

16247

237204

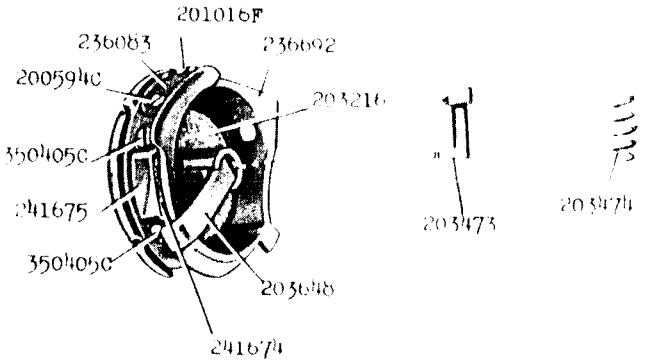

224115

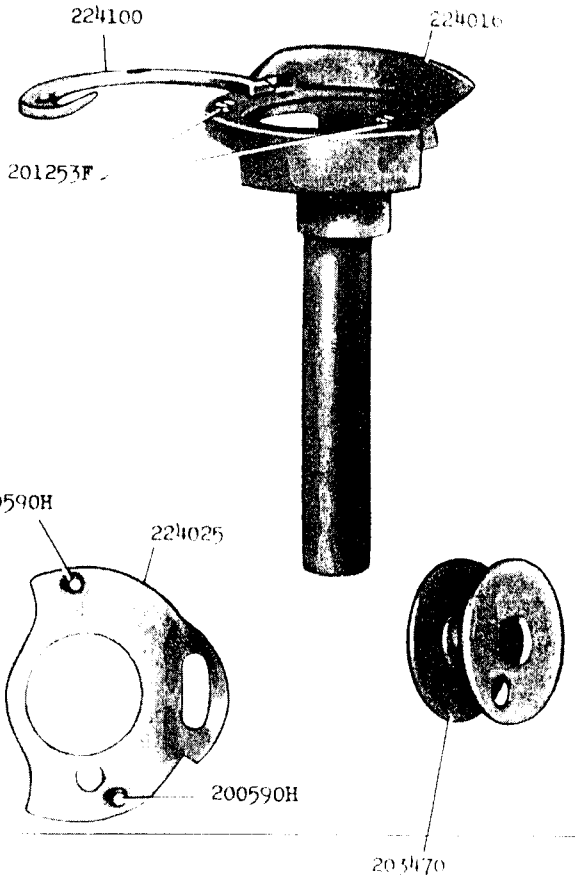

16248 - 2/3

237193

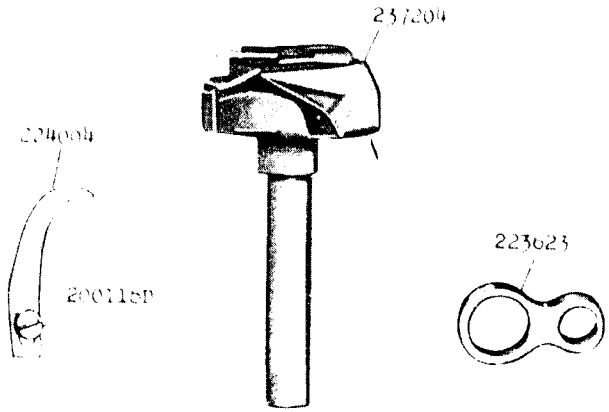

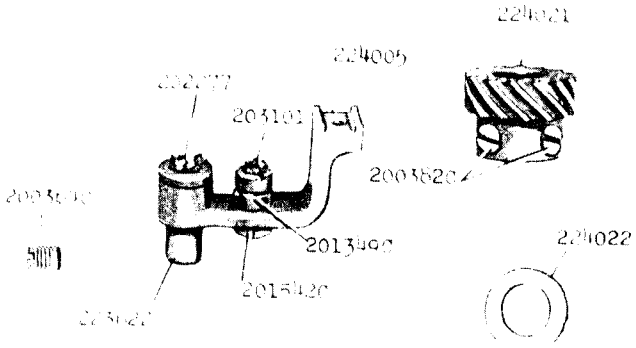

224023

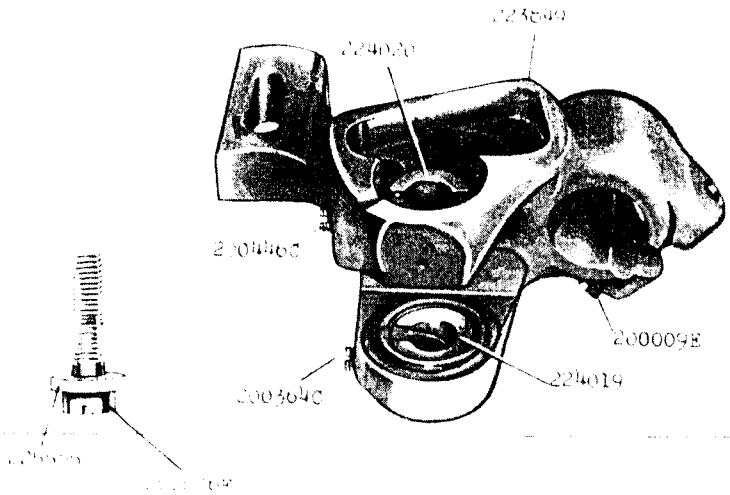

16249 - 2/3

240033

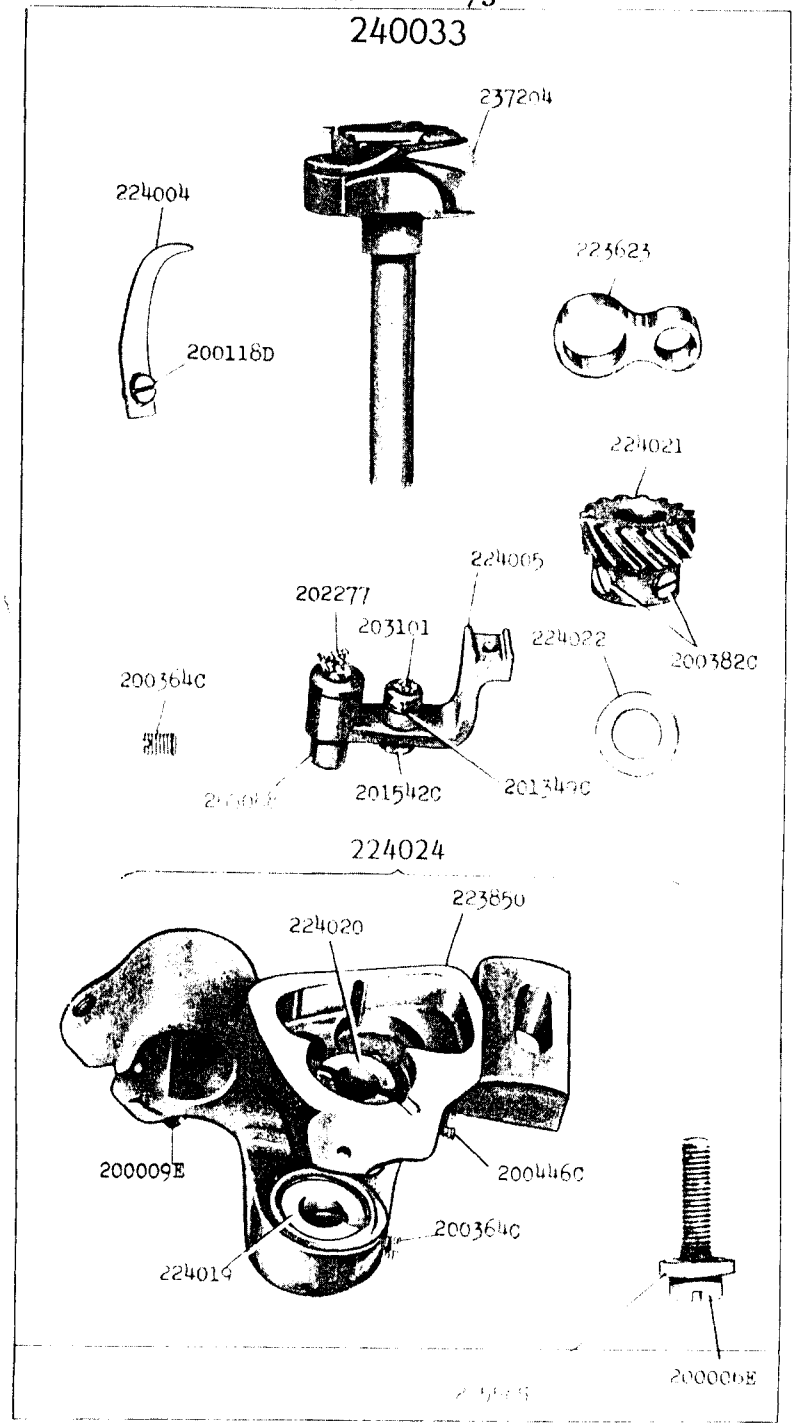

16257 - 1/6

259143

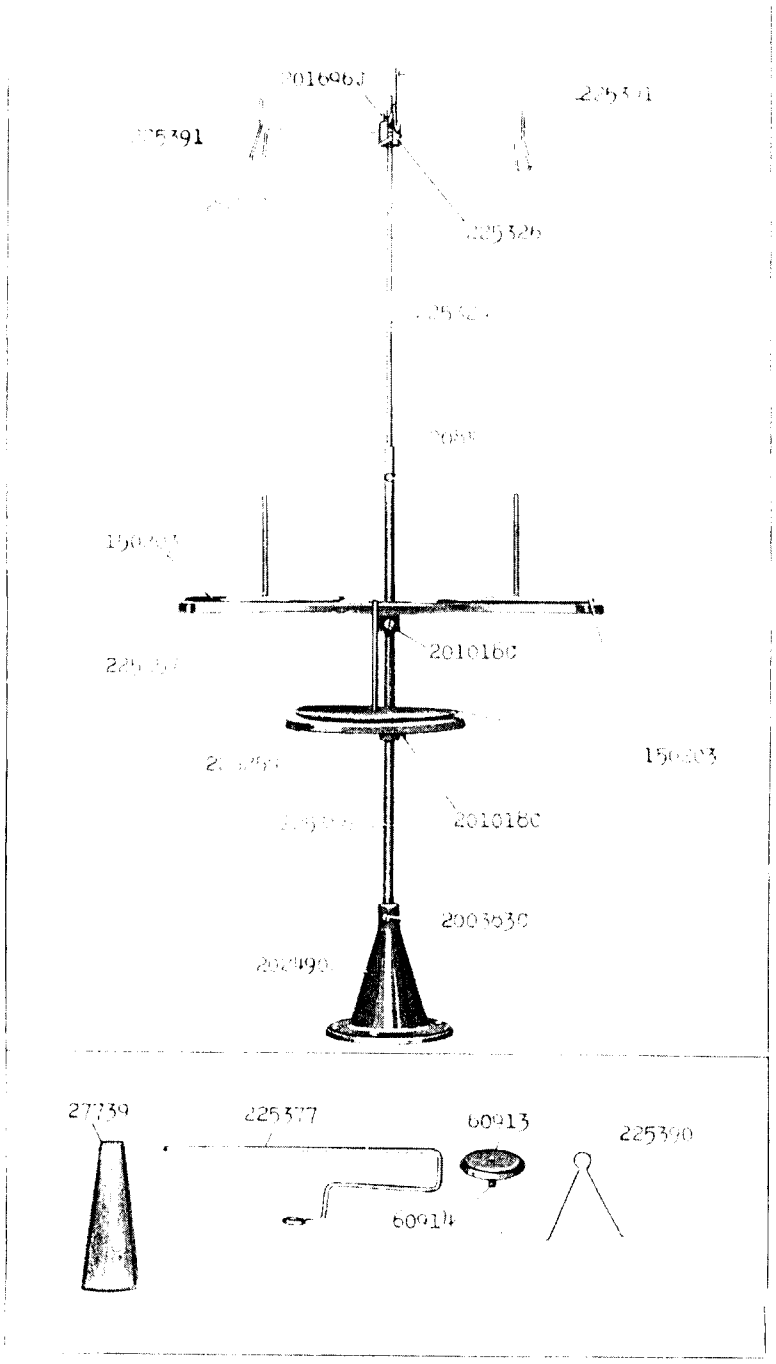

16259 - 3/8

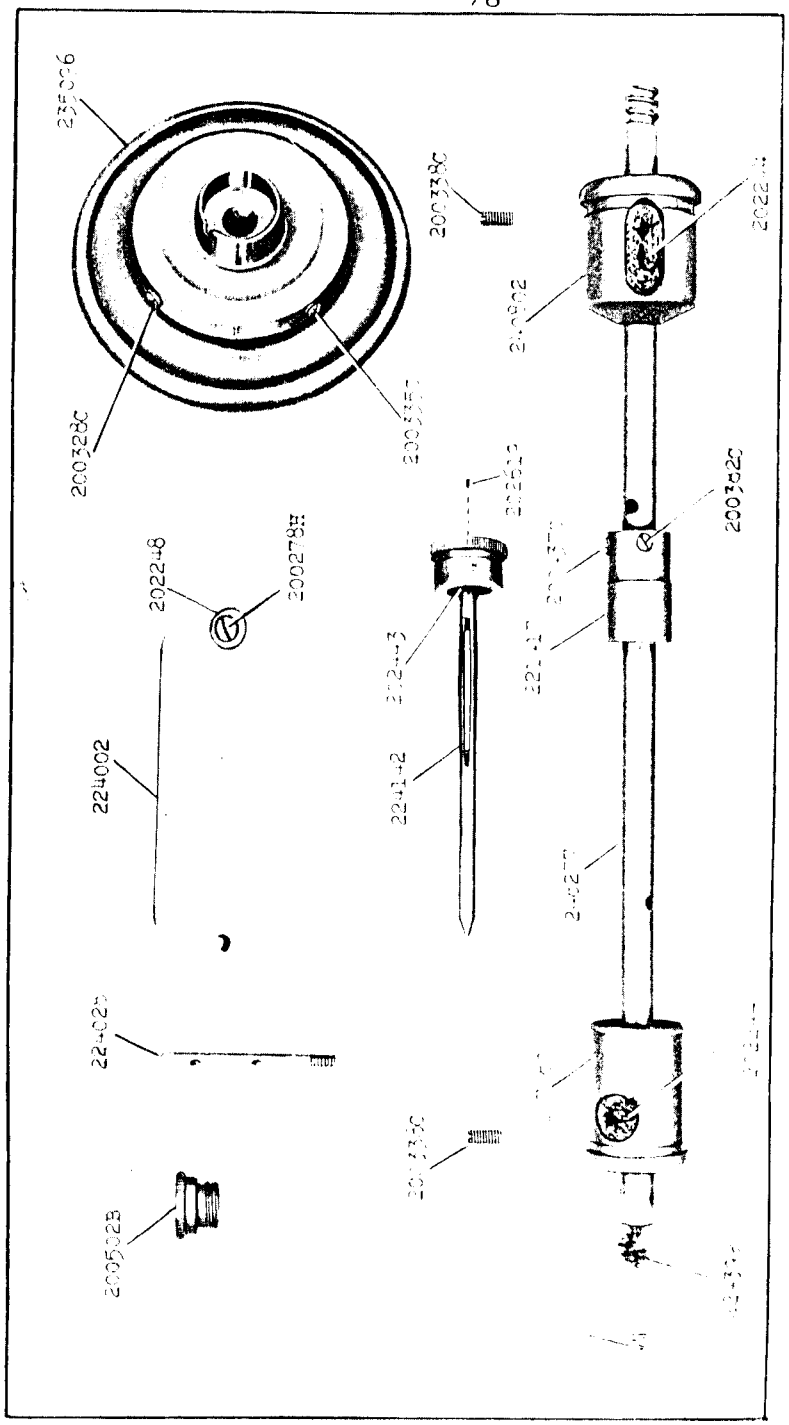

16260 - 1/2

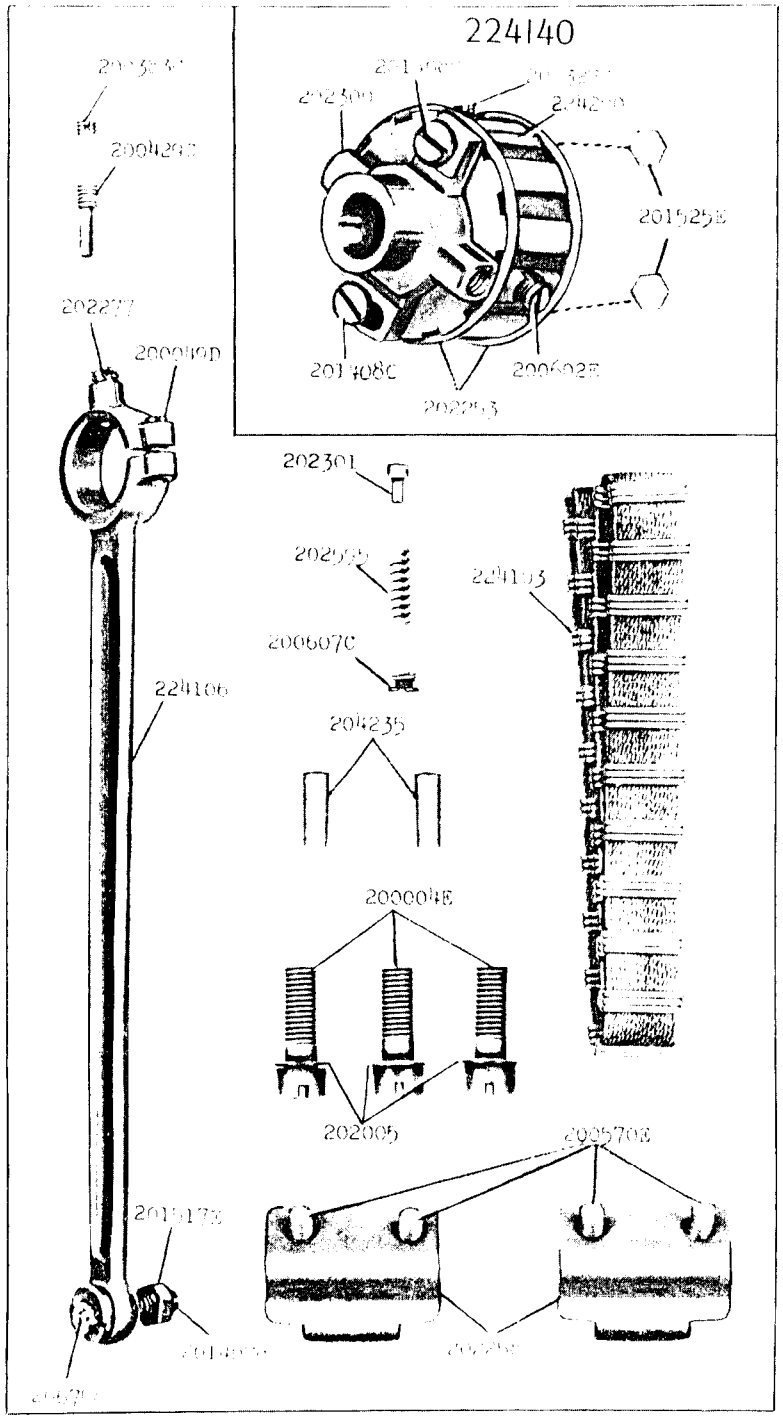

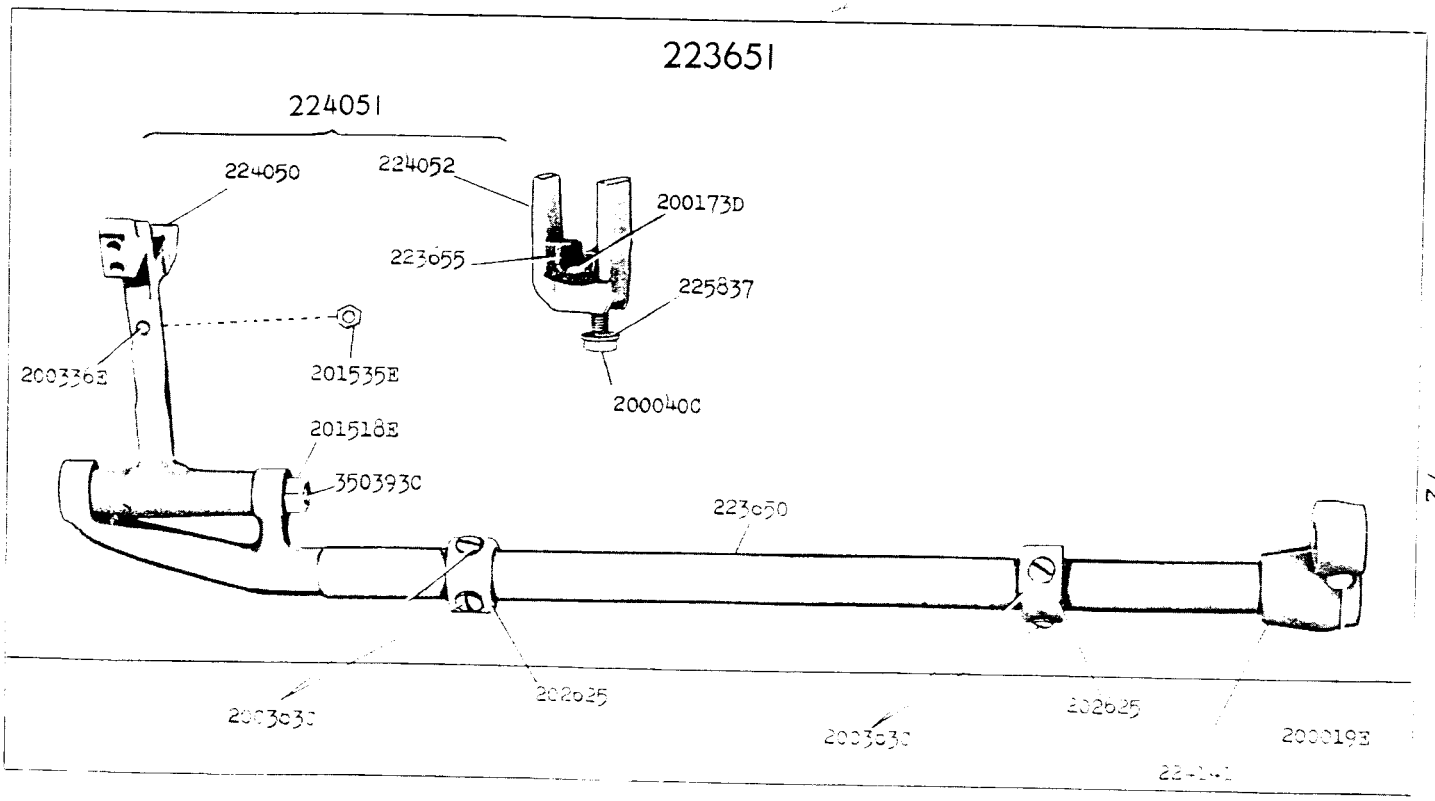

16261 - 1/2

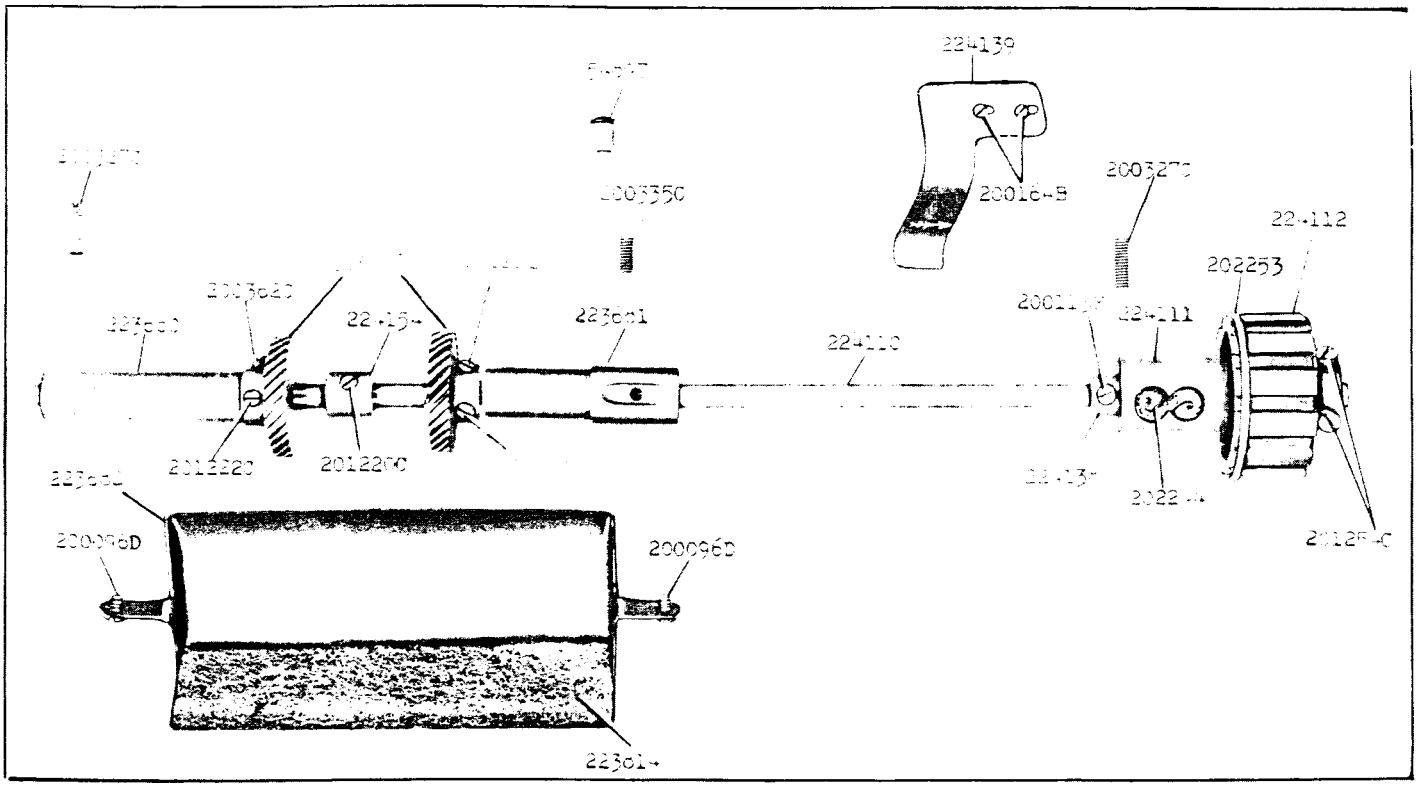

16262 - 3/8

16263 - 1/2

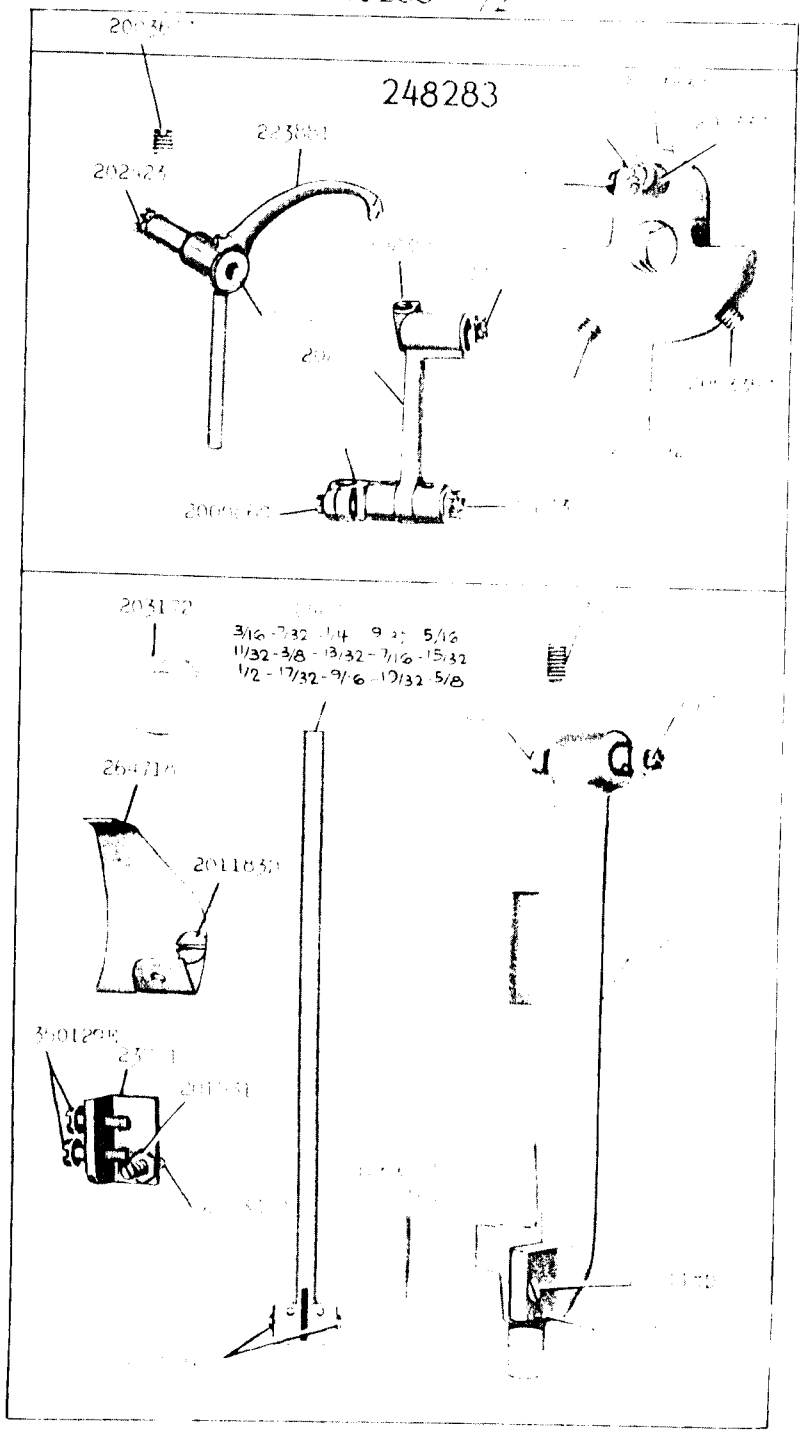

16264 - 5/8

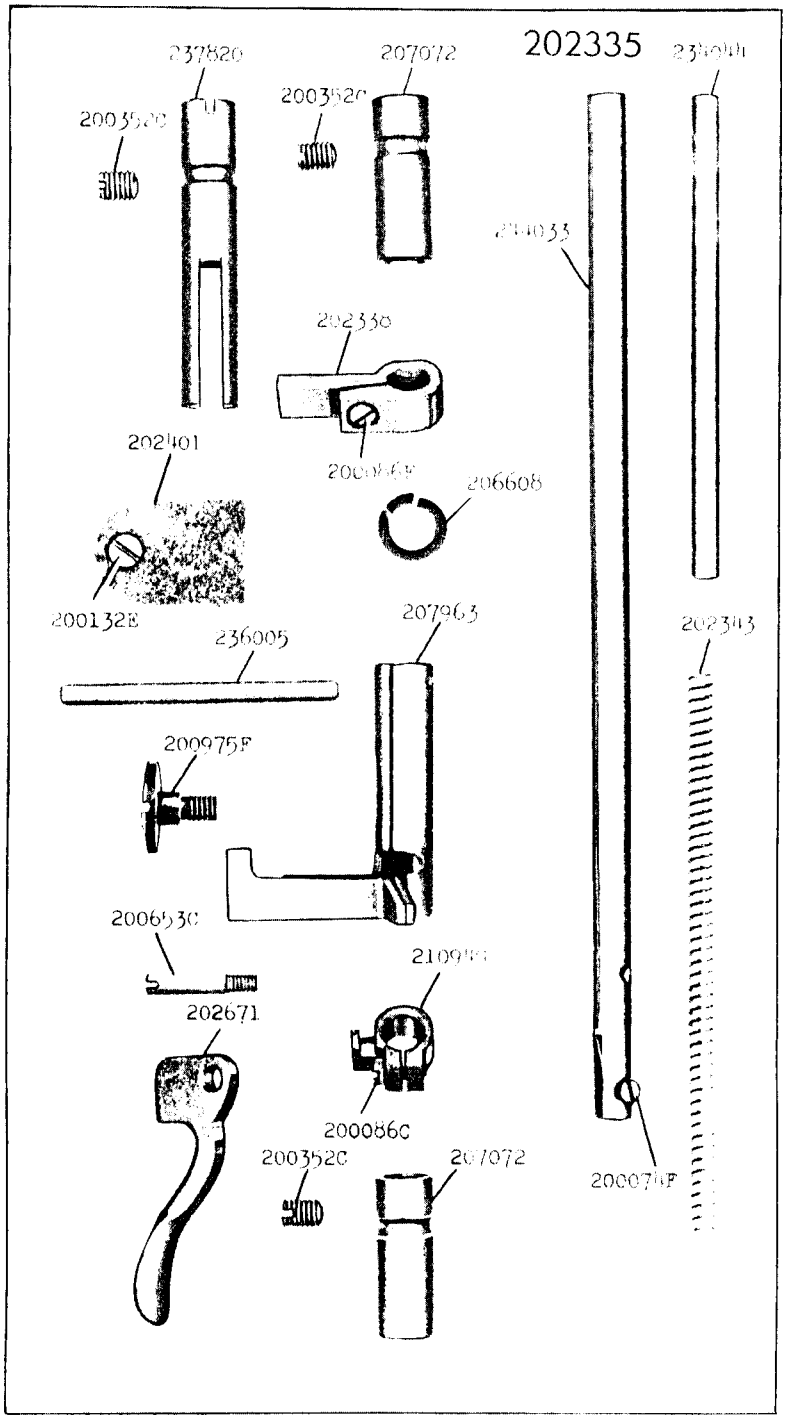

16265 - 3/8

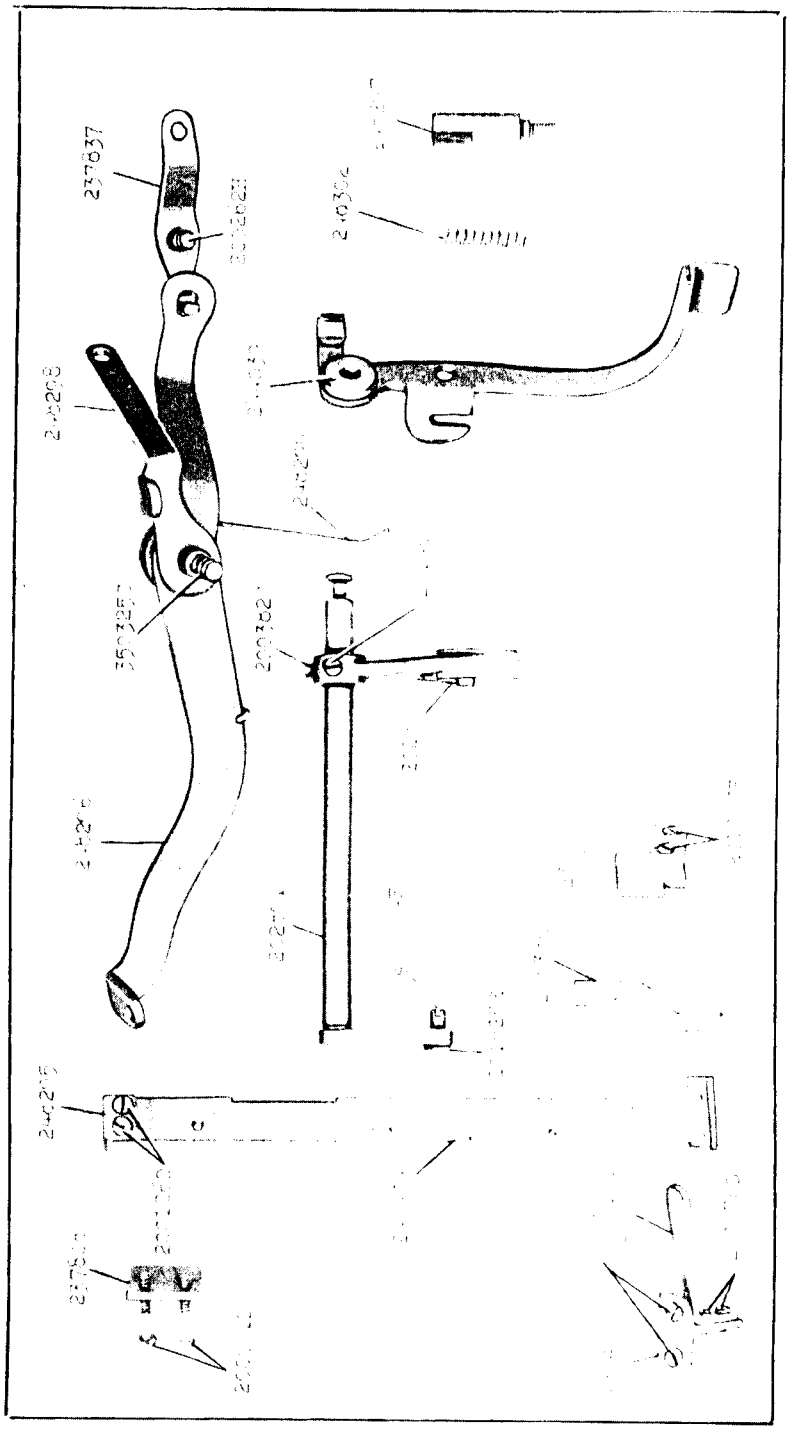

16266 - 2/3

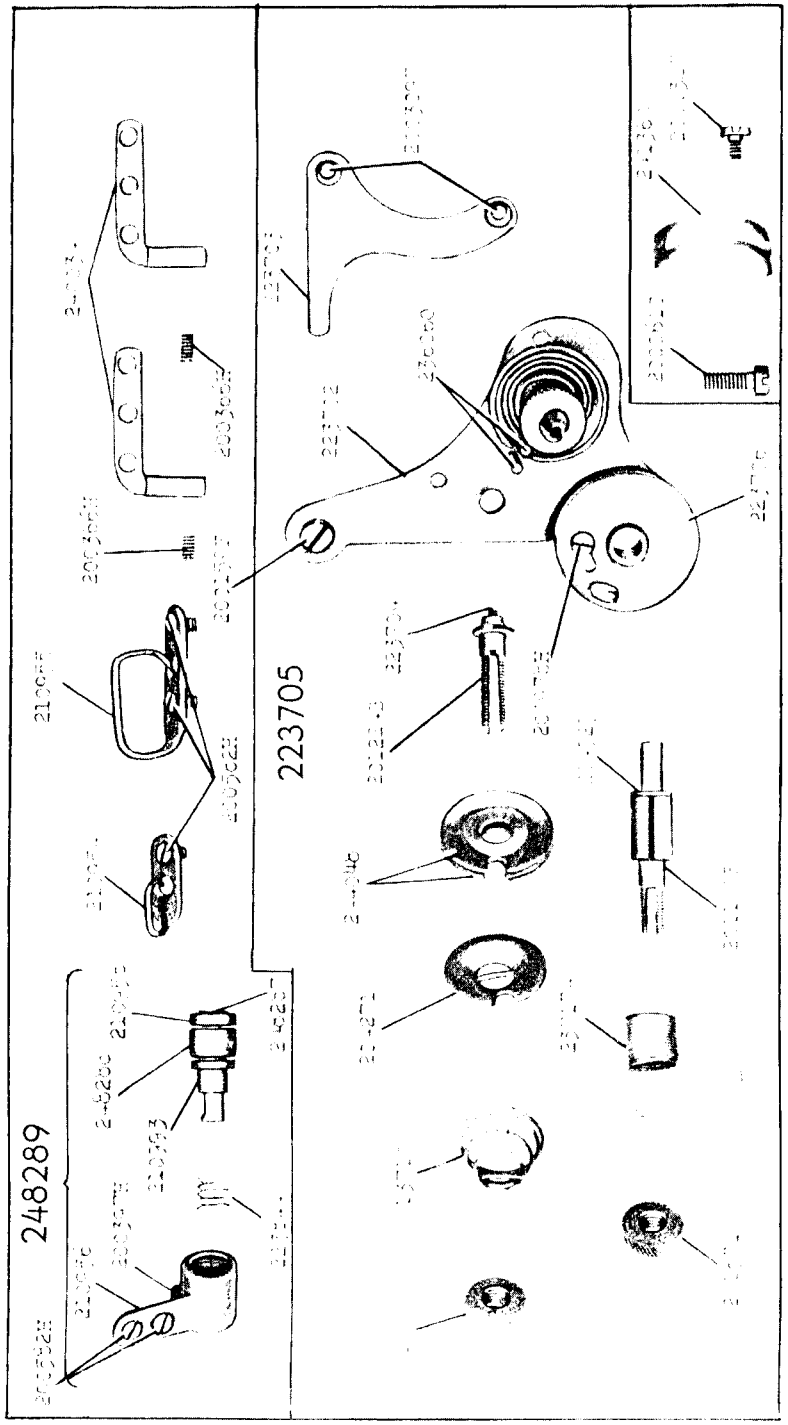

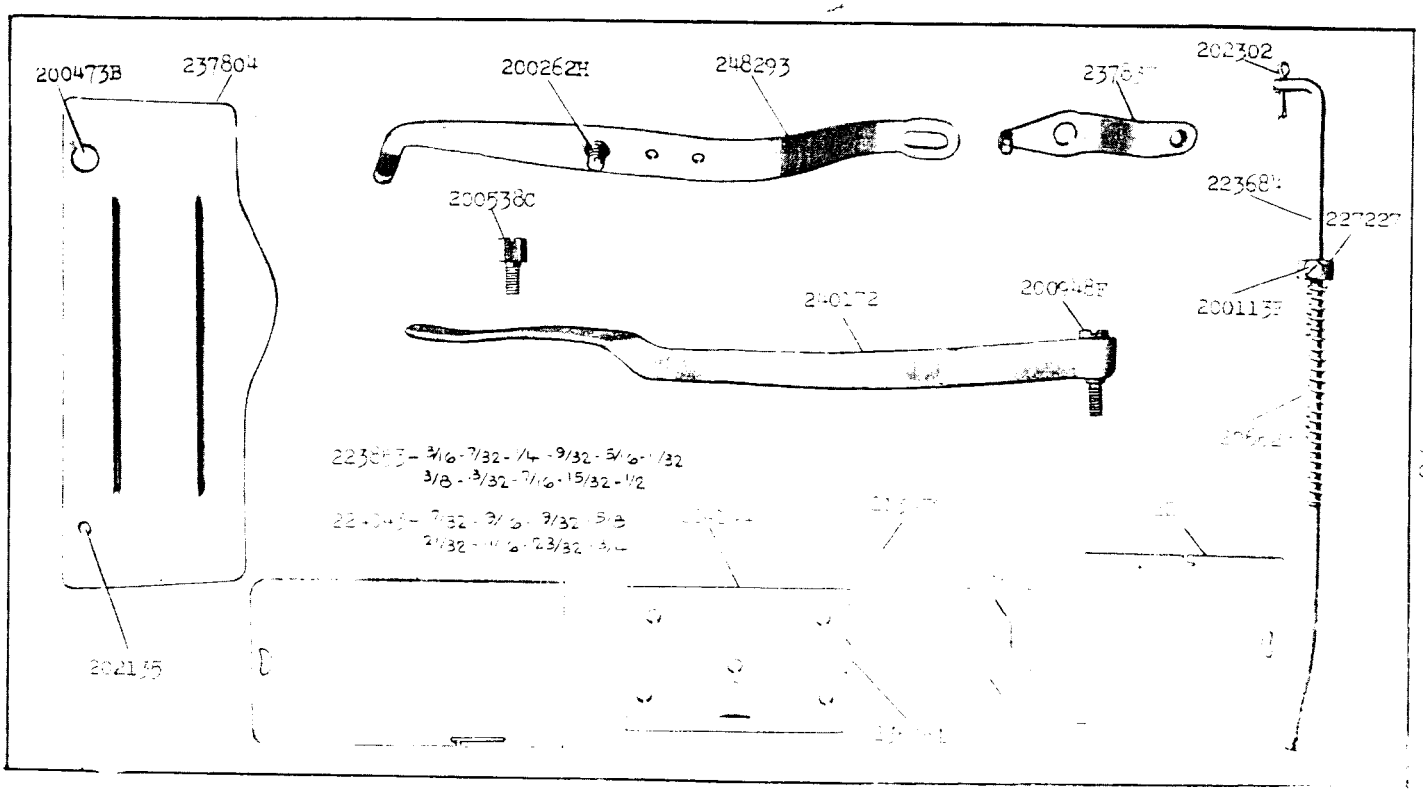

16267 - 3/8

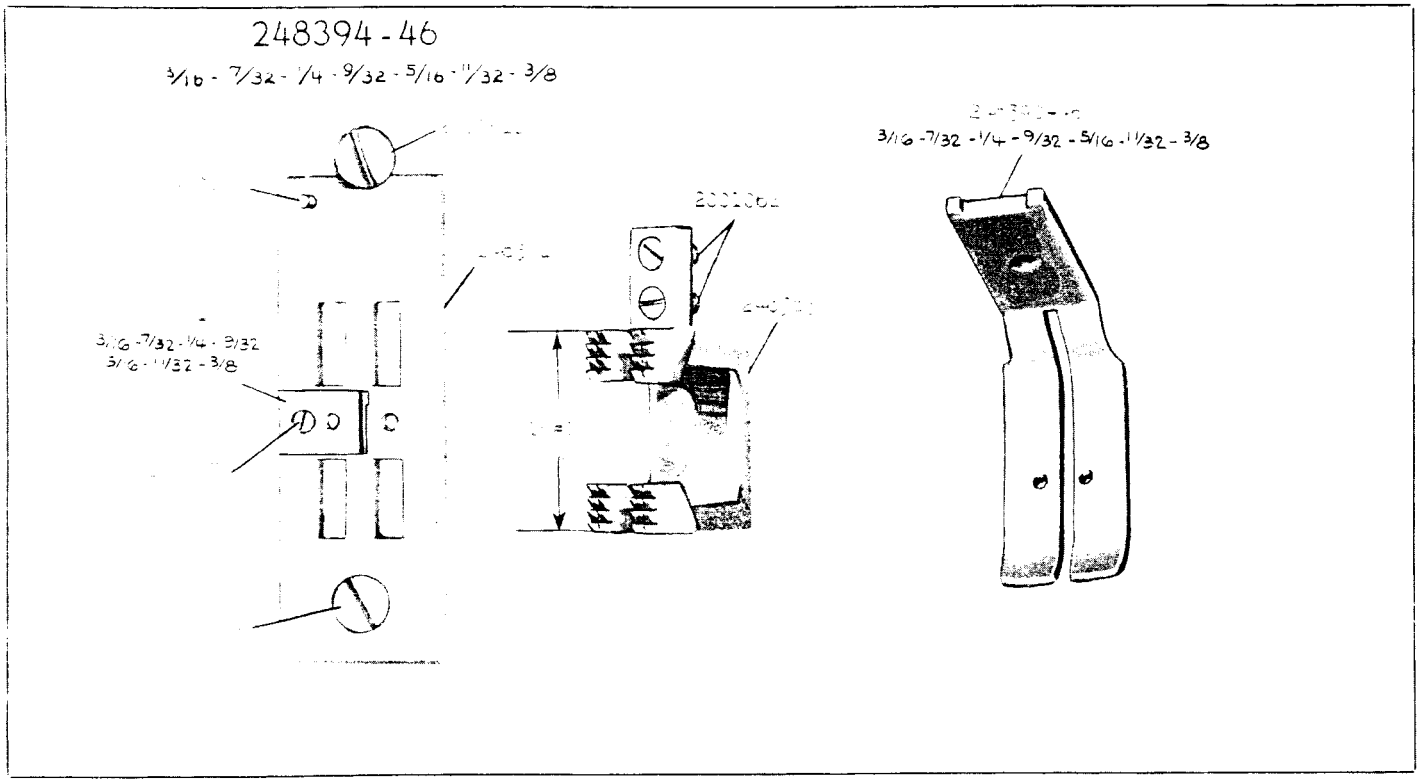

16268

16269 - 3/8

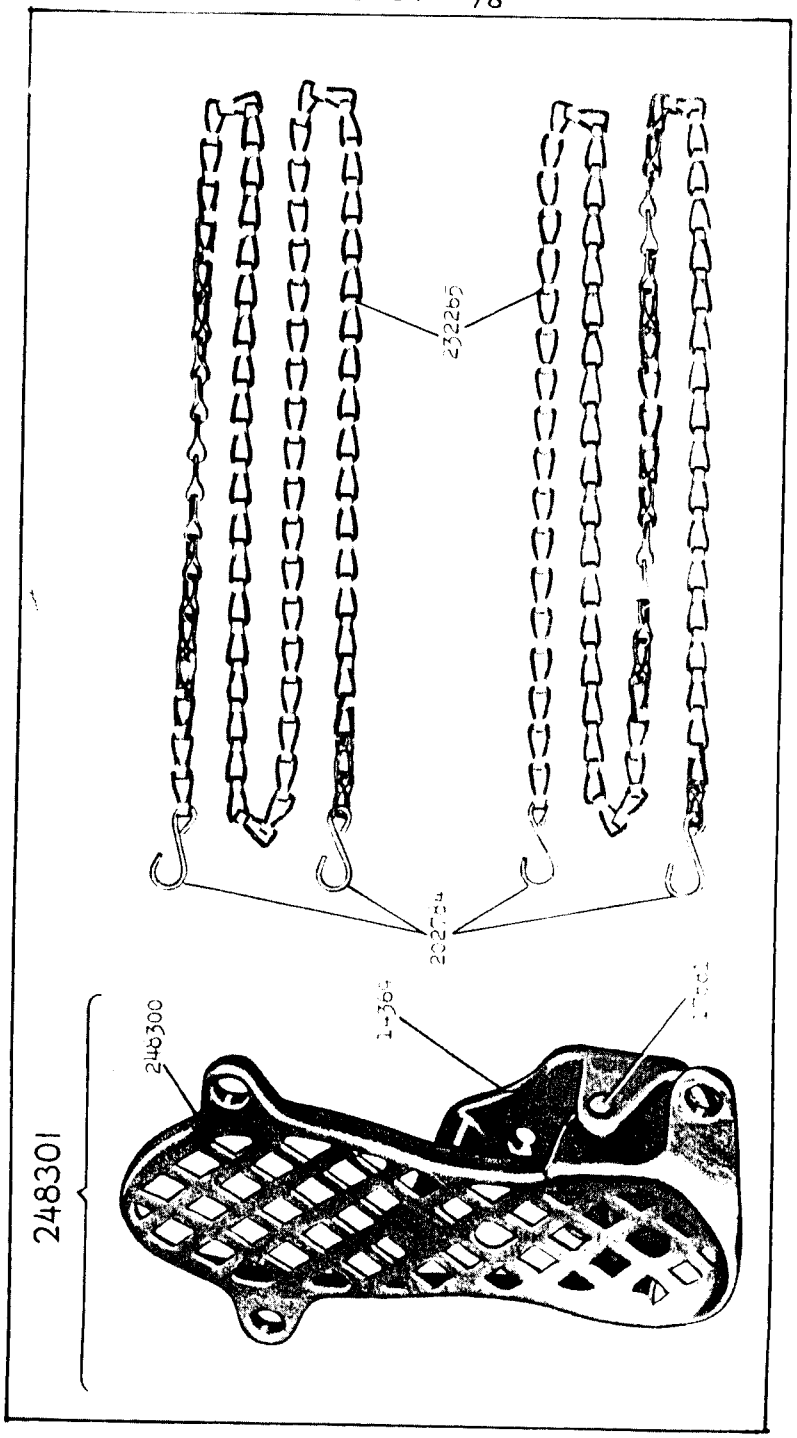

16615 - 1/2

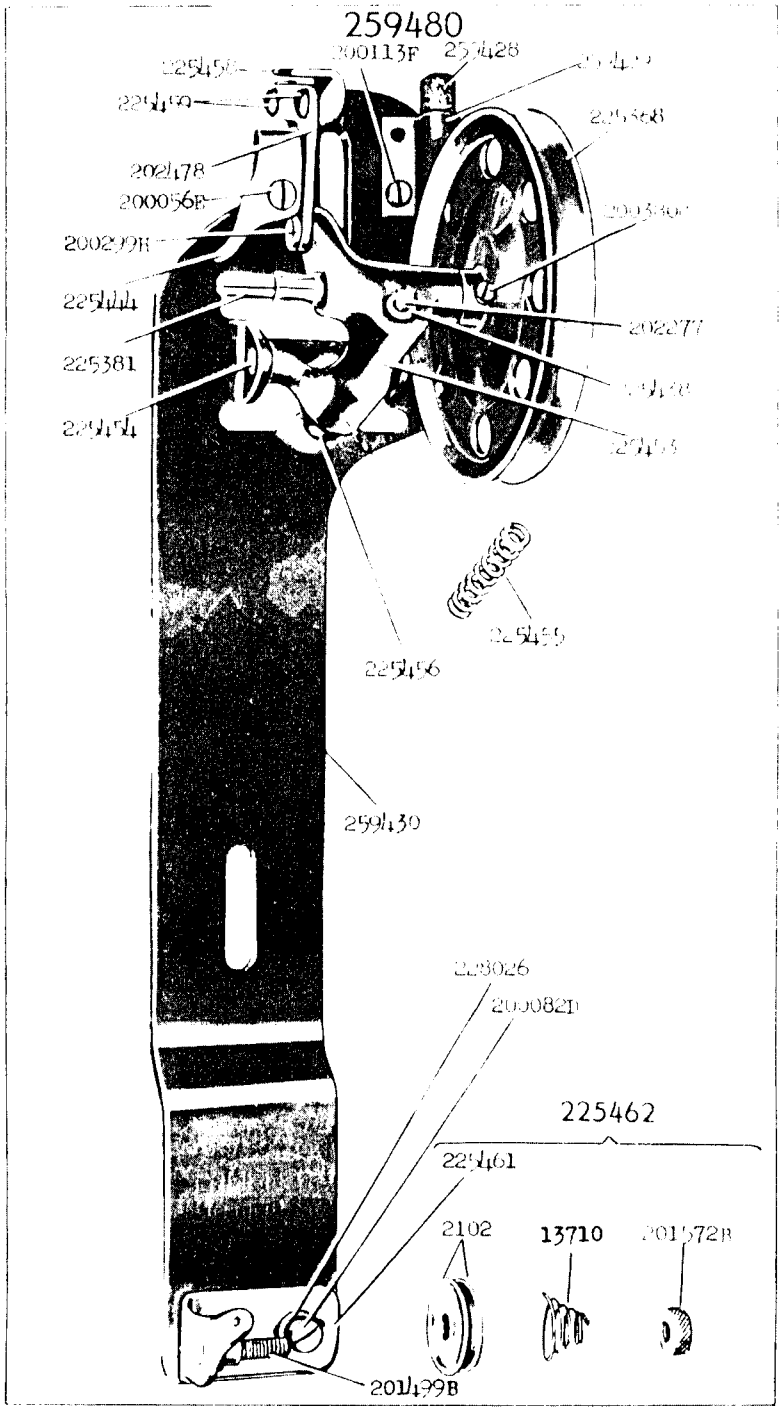

16643 - 3/8

228368

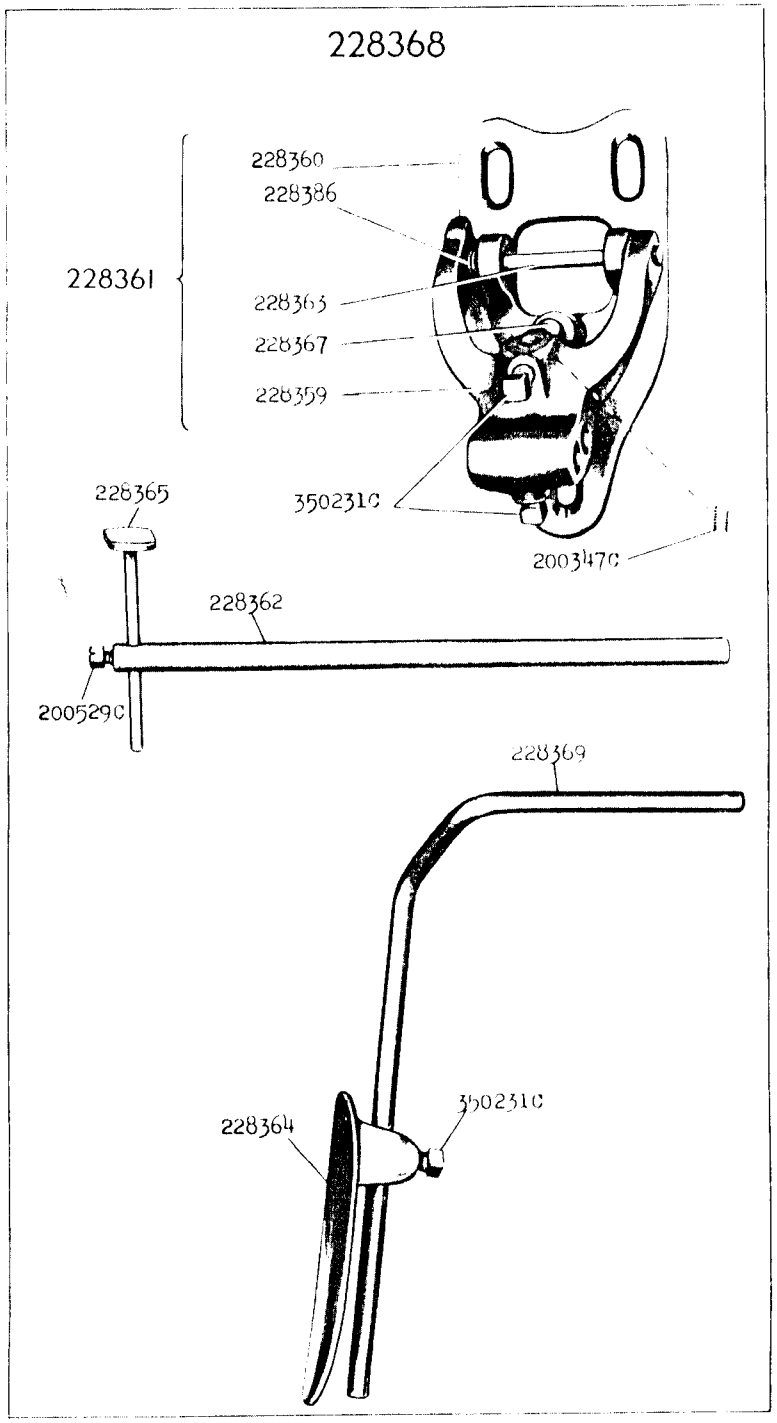
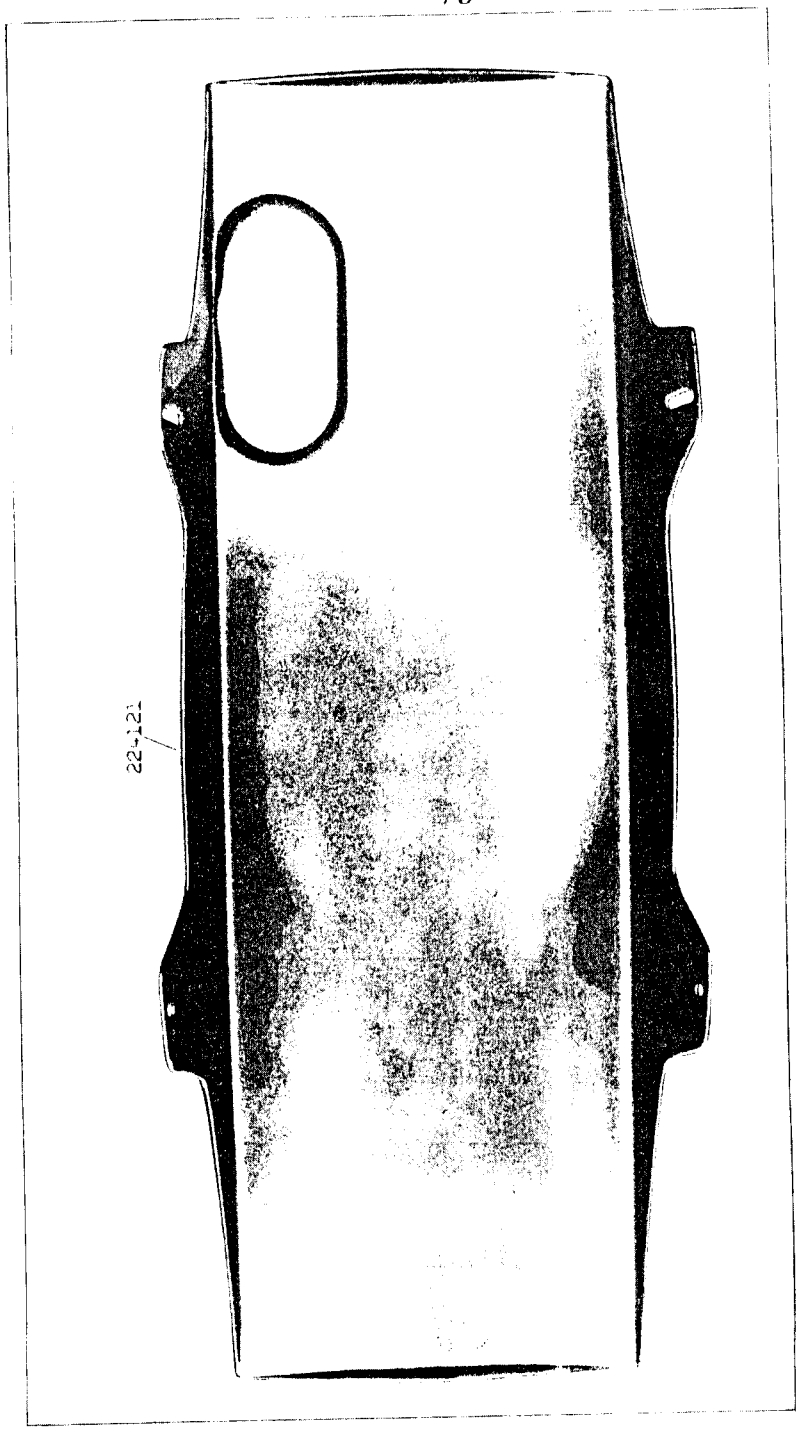
16644 - 1/3