SINGER
110W150

Form 1964w
(Rev. 154)
Printed in U. S. A.

LIST
OF
PARTS

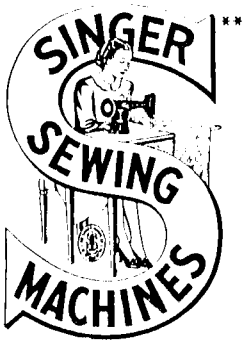

SINGER**

MACHINE No. 110w150

THE SINGER MANUFACTURING COMPANY

**A Trade Mark of THE SINGER MANUFACTURING COMPANY

INSTRUCTIONS FOR OILING

To ensure easy running and prevent unnecessary wear of the parts which are in movable contact, the machine requires oiling and when in continuous use, "TYPE B" or "TYPE D" OIL, sold by Singer Sewing Machine Company, should be applied at least twice each day to all oil holes marked "OIL", as instructed in Form 1943w.

"TYPE D" OIL should be used when an oil is desired which will produce a minimum of stain on fabrics, even after a long period of storage.

Occasionally check the grease in gear case, fill when necessary, with GEAR LUBRICANT, sold by Singer Sewing Machine Company.

To insure satisfactory results, "TYPE E" Thread Lubricant, sold by Singer Sewing Machine Company, should be used in the thread lubricator which is attached to the top of the machine.

Oil the the bobbin case bearing in the hook race each time a bobbin is replaced.

Copyright, U. S. A., 1925, 1938, 1939, 1940, 1950 and 1954,
by The Singer Manufacturing Company
All Rights Reserved for All Countries

INDEX

	Page
Accessories	14
Bobbin Winder	14
Feed Regulating Gears	15
Foot Lifter	15
Machine No. 110w150	5
Numerical List of Parts	19
Roller Pressers	16
Work Plate Platform	17

INSTRUCTIONS FOR ORDERING

In ordering from this list, use ONLY the PART number in the FIRST column.

The number stamped on a Sewing Machine Part is the number of the Single Part only, except when the part includes Set Screws, Clamping Screws, Studs and Rollers Spun on, Small Wires riveted, or Parts soldered together, etc., which it is necessary to furnish in combination.

Every combination of parts sent out has its specific number which, although not stamped on Parts (except in above case), must be used when ordering the combination.

Each number always indicates the SAME PART in whatever list it appears, or for whatever Machine.

The letters after some of the numbers indicate the style of finish only, as follows:

- A Hardened, Polished, Nickel Plated and Buffed.
- AL Heat Treated for Toughness.
- B Polished, Nickel Plated and Buffed.
- C Hardened only.
- D Polished only.
- E Soft, Not polished.
- F Hardened and Polished.
- H Blued.
- J Nickel Plated only.
- R Merlized.
- X Black Oxide, for Iron and Steel.
- XC Hardened and Black Oxide, for Iron and Steel.
- Y Black Nickel Plated only.
- Z Chromium Plated.

These letters MUST BE USED when they appear in the list and AFTER the number, as in the list.

In this series
1 to 1500, 200001 to 201500 and 350001 to 351500 are Screw Numbers.
1501 to 1800, 201501 to 201800 and 351501 to 351800 are Nut Numbers.
1801 to 2000, 201801 to 202000 and 351801 to 352000 are Roller Numbers.
2001 to 50000 and 202001 to 350000 are Numbers of Machine Parts.

The figures in the second column refer only to the plate in which the illustration of the part is shown and are NOT TO BE USED in ordering.

Two or more numbers over a cut indicate that the difference between such parts is not visible in an illustration.

Parts marked with an asterisk (*) are furnished only when repairs are made at the factory.

LIST OF PARTS COMPLETE

FOR

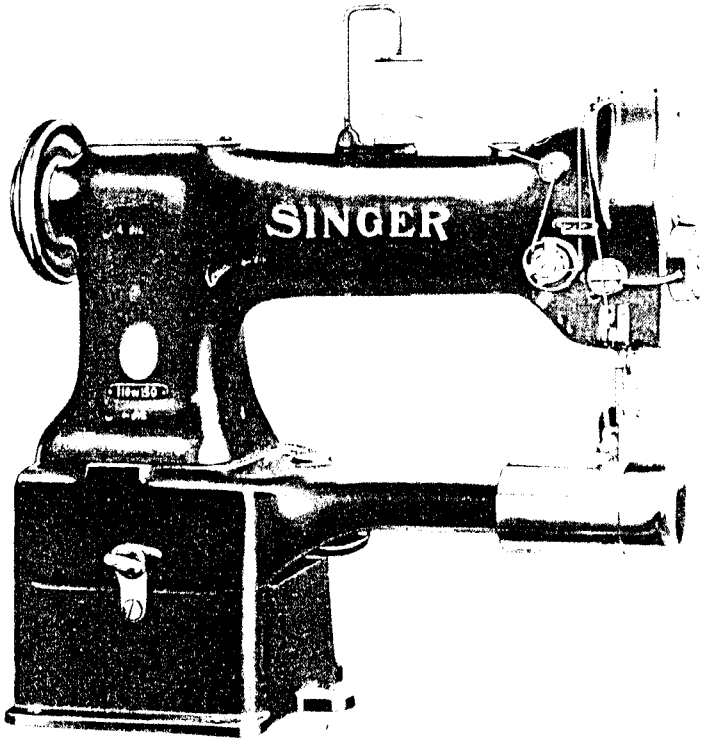

MACHINE No. 110w150

LEFT HAND CYLINDER MACHINE.

VERTICAL HOOK. ROLLER PRESSER.

HIGH SPEED. LOCK STITCH.

MAXIMUM STITCH 13 TO THE INCH.

FOR SHOES.

No.	Plate	Name
*239001	-----	Arm with 202135
202247	16778	" Cap
200278H	16778	" " Screw
202248	16778	" " " Washer
204235	16758	" Position Pin (2)
200010E	16758	" Screw (2)
200004E	16758	" Screw
202005	16758	" " Washer (3)
237702	16778	" Shaft with 224392 and 350431E

No.	Plate	Name
237748	16778	Arm Shaft Bushing (back) with 202260
202260	16778	" " " " Oil Packing (wick)
200071E	16778	Arm Shaft Bushing (back) Screw (3)
239062	16778	" " " (front) with 202244
202244	16778	" " " " Oil Packing (wick)
200502H	16778	Arm Shaft Bushing (front) Oil Packing Thumb Screw
200338C	16778	Arm Shaft Bushing (front) Set Screw
224392	16778	" " Oil Packing (wick)
350431E	16778	" " " " Stop Screw
202632	16758	" Side Plate
200462H	16758	" " " Thumb Screw
237793	16778	Balance Wheel (aluminum alloy casting) for "V" belt (outside diameter of belt groove 2.9 in.) with 350540C and 350541C
350419H	16778	Balance Wheel Adjusting Screw
350540C	16778	" " Position Screw
350541C	16778	" " Set Screw
*239002	-----	Bed (cylinder)
239003	16782	" " End Cover
213312	16782	" Base (4 in. high)
213313	16782	" " (6 in. high)
Note:		Bed Base 213313 is furnished with this machine unless otherwise specified on order
203184	16782	Bed Clamp
200262H	16782	" " Hinge Screw
202622	16782	" " Packing Washer
200728H	16782	" " Thumb Screw
203185	16782	" " Washer
202618	16782	" Hinge
201110H	16782	" " Screw (6)
213338	16782	" Slide (back)
239004	16782	" " " Clamp Plate (back)
239005	16782	" " " " " (front)
200580H	16782	" " " " " Screw (4)
203470	16780	Bobbin
*235099	-----	" Case
203648	16780	" " Latch
*202056	-----	" " " Pin
203473	16780	" " " Plunger
203474	16780	" " " Spring
239006	16780	" " Lever
*203476	-----	" " " Eccentric
204243	16780	" " " " Position Pin
203577	16780	" " " Fulcrum with 203579
200110D	16780	" " " " Screw
203578	16780	" " " Slide
203579	16780	" " " " Stud
241674	16780	" " Oiling Felt

No.	Plate	Name
241675	16780	Bobbin Case Oiling Felt Retainer
350405C	16780	" " " " " Screw
203214	16780	" " Tension Spring
200984C	16780	" " " " Regulating Screw
200594C	16780	Bobbin Case Tension Spring Screw
203216	16780	" " Washer (cloth)
235100	16780	Bobbin Case complete, Nos. 200594C, 200984C, 202056, 203214, 203216, 203473, 203474, 203648, 235099, 241674, 241675 and two 350405C
239007	16780	Cylinder End Cover Rest
200110D	16780	" " " " Screw
239070	16758	Face Plate with 201650H and 350432XC
202135	16758	" " Position Pin
200473H	16758	" " Thumb Screw
239009	16779	Feed Driving Gear Shaft
239028	16779	" " " " Bushing (back)
239010	16779	" " " " " (front)
200347C	16779	" " " " " Set Screw (back)
200335C	16779	Feed Driving Gear Shaft Bushing Set Screw (front)
221743	16779	Feed Driving Gear Shaft Collar with two 200380C
200380C	16779	Feed Driving Gear Shaft Collar Set Screw
239020	16779	Feed Driving Gear Shaft Driving Gear, 25 teeth, with 200382C and 201220C, for 12-1/2 to 23 stitches per inch
239013	16779	Feed Driving Gear Shaft Driving Gear Guard
200030H	16779	Feed Driving Gear Shaft Driving Gear Guard Screw
201220C	16779	Feed Driving Gear Shaft Driving Gear Position Screw
200382C	16779	Feed Driving Gear Shaft Driving Gear Set Screw
239015	16779	Feed Driving Gear Shaft Pinion, 19 teeth, with 200382C and 201220C
201220C	16779	Feed Driving Gear Shaft Pinion Position Screw
200382C	16779	Feed Driving Gear Shaft Pinion Set Screw
237724	16779	Feed Driving Worm Gear with 200378C and 201220C
201220C	16779	Feed Driving Worm Gear Position Screw
200378C	16779	Feed Driving Worm Gear Set Screw
239016	16779	" " " " Shaft
239017	16779	" " " " " Bushing

No.	Plate	Name
200346C	16754	Feed Driving Worm Gear Shaft Bushing Set Screw
239027	16779	Feed Regulating Counter Shaft
239028	16779	" " " " Bushing
200363AL	16779	" " " " " Set Screw
239021	16779	Feed Regulating Counter Shaft Gear, 26 teeth, with 200382C and 201220C
201220C	16779	Feed Regulating Counter Shaft Gear Position Screw
200382C	16779	Feed Regulating Counter Shaft Gear Set Screw
239023	16779	Feed Regulating Gear, 28 teeth, with 200382C and 201220C
201220C	16779	Feed Regulating Gear Position Screw
200382C	16779	" " " Set Screw
239029	16779	" Wheel
239030	16779	" " Bracket
200437C	16779	" " " Adjusting Screw (back)
200437C	16779	Feed Wheel Bracket Adjusting Screw (front)
200388C	16779	Feed Wheel Bracket Adjusting Screw Check Screw (back or front) (2)
239031	16780	Feed Wheel Bracket Position Plate
200156E	16780	" " " " " Screw
239032	16779	Feed Wheel Gear
200083E	16779	" " Screw (2)
239040	16758	Foot Lifter Lifting Lever
200262H	16758	" " " " Hinge Screw
239063	16758	" " " " Spring
200835D	16758	" " " " " Screw
*203482	-----	Hook (sewing)
237726	16780	" 203482 with 201253F, 201376C and 221148
239076	16780	Hook and Bobbin Case complete, Nos. 235100 and 237726
203596	16780	Hook Bevel Gear Socket, 18 teeth
239033	16780	" " " " Bushing
200446C	16780	" " " " " Position Screw
200556H	16780	Hook Bevel Gear Socket Screw
239034	16779	" " Pinion with two 350171C
350171C	16779	" " " Set Screw
239035	16779	" Driving Shaft
235857	16779	" " " Bevel Gear with 200374C and 200396C
239036	16754	Hook Driving Shaft Bevel Gear Housing with three 200346C
237730	16754	Hook Driving Shaft Bevel Gear Housing Cap (bottom)

No.	Plate	Name
237731	16754	Hook Driving Shaft Bevel Gear Housing Cap (bottom) Gasket
237732	16754	Hook Driving Shaft Bevel Gear Housing Cap (side)
237733	16754	Hook Driving Shaft Bevel Gear Housing Cap (side) Gasket
200053C	16754	Hook Driving Shaft Bevel Gear Housing Cap Screw (4)
201082E	16754	Hook Driving Shaft Bevel Gear Housing Screw (long)
225532	16754	Hook Driving Shaft Bevel Gear Housing Screw (long) Washer
201308E	16754	Hook Driving Shaft Bevel Gear Housing Screw (short)
203637	16754	Hook Driving Shaft Bevel Gear Housing Screw (short) Washer
200396C	16779	Hook Driving Shaft Bevel Gear Position Screw
200374C	16779	Hook Driving Shaft Bevel Gear Set Screw
239037	16779	Hook Driving Shaft Bushing (back)
200346C	16754	" " " " " Set Screw
239038	16779	Hook Driving Shaft Bushing (front)
200363AL	16779	" " " " " Set Screw
221743	16779	Hook Driving Shaft Collar with two 200380C
200380C	16779	Hook Driving Shaft Collar Set Screw
221148	16780	" Gib
201376C	16780	" " Hinge Screw
201253F	16780	" " Screw
239039	16780	" Saddle with 200446C
350175E	16780	" " Screw (2)
225837	16780	" " " Washer (2)
213018	16780	" Washer with 203476 and three 204243
237937	16755	Needle Bar with 200141F
239041	16755	" " Connecting Link
239042	16755	" " " " Oil Guard
201183D	16755	" " " " " " Screw
202333	16755	Needle Bar Connecting Link Stud with 202254
202254	16755	Needle Bar Connecting Link Stud Oil Packing (wick)
200374C	16755	Needle Bar Connecting Link Stud Set Screw
200383C	16755	Needle Bar Connecting Link Stud Set Screw
*206891	-----	Needle Bar Connecting Stud

No.	Plate	Name
202329	16755	Needle Bar Connecting Stud 206891 with 200086C and 202330
202330	16755	Needle Bar Connecting Stud Oil Packing (wick)
200086C	16755	Needle Bar Connecting Stud Pinch Screw
202692	16755	" " Crank with 200335C, 200374C, 200383C, 200428C and 202333
239043	16755	Needle Bar Crank 202692 with 202329, 202399, 202400, 239041 and 239049
203172	16755	Needle Bar Crank Friction Washer
200428C	16755	" " " Position Screw
200335C	16755	" " " Set Screw
239044	16755	" " Rock Frame
239045	16755	" " " " 239044 with 237937
*237794	-----	Needle Bar Rock Frame Driving Eccentric
*237749	-----	Needle Bar Rock Frame Driving Eccentric Body
350107C	16778	Needle Bar Rock Frame Driving Eccentric Body Position Screw
443C	16778	Needle Bar Rock Frame Driving Eccentric Body Set Screw
1103C	16778	Needle Bar Rock Frame Driving Eccentric Regulating Screw
217D	16778	Needle Bar Rock Frame Driving Eccentric Set Screw
7071	16778	Needle Bar Rock Frame Driving Eccentric Set Screw Washer
237750	16778	Needle Bar Rock Frame Driving Eccentric complete, Nos. 217D, 443C, 1103C, 7071, 237749, 237794 and 350107AL
237739	16754	Needle Bar Rock Frame Driving Fork Lever with 200029E
200029E	16754	Needle Bar Rock Frame Driving Fork Lever Pinch Screw
237740	16754	Needle Bar Rock Frame Driving Fork Lever Slide Block (two pieces)
210910	16755	Needle Bar Rock Frame Hinge Stud with 202277
202277	16755	Needle Bar Rock Frame Hinge Stud Oil Packing (wick)
200347C	16755	Needle Bar Rock Frame Hinge Stud Set Screw
202666	16755	Needle Bar Rock Frame Position Bracket
200098F	16755	Needle Bar Rock Frame Position Bracket Screw
202667	16754	Needle Bar Rock Frame Rock Shaft
210978	16754	" " " " " " 202667 with 200387C and 210920

No.	Plate	Name
202668	16754	Needle Bar Rock Frame Slide Block
210920	16754	" " " " " " 202668 with 201141C
201141C	16754	Needle Bar Rock Frame Slide Block Screw Stud
200387C	16754	Needle Bar Rock Frame Slide Block Screw Stud Set Screw
200141F	16755	Needle Set Screw
207072	16781	Presser Bar Bushing (2)
200352C	16781	" " " Set Screw (2)
202671	16781	" " Lifter
200653C	16781	" " " Hinge Screw
239046	16781	" " Lifting Releasing Lever Bracket
200975F	16781	Presser Bar Lifting Releasing Lever Bracket Guide Screw
206608	16781	Presser Bar Lifting Releasing Lever Bracket Spring
202337	16781	Presser Bar Position Guide
202338	16781	" " " " Lever with 200086F
200086F	16781	Presser Bar Position Guide Lever Pinch Screw
200352C	16781	Presser Bar Position Guide Set Screw
239069	16758	" " Spring (flat)
239048	16781	" " " Bracket with 200086C
200086C	16781	" " " " Pinch Screw
350346C	16758	Presser Bar Spring Regulating Screw
200948F	16758	" " " Support Screw
201954	17635	Roller Presser, 13/16 in. diam., 1/8 in. face, with 1528J, 201699C, 350104C and twenty-eight 206417
203422	17635	Roller Presser Arm
237816	17635	" " " 203422 with 201954
233807	16781	" " " Bracket
235088	16781	" " " " Position Collar with 200362C
200117F	16781	Roller Presser Arm Bracket Position Collar Position Screw
200362C	16781	Roller Presser Arm Bracket Position Collar Set Screw
202558	16781	Roller Presser Arm Bracket Spring
202559	16781	" " " " " Stop
200141F	16781	" " " " " " Screw
200096D	16781	Roller Presser Arm Screw
206417	17635	" " Ball, 1/16 in. diameter
201699C	17635	" " " Cone
202557	16781	" " Bar
350104C	17635	" " Hinge Screw
1528J	17635	" " " " Nut

No.	Plate	Name
237847	16781	Roller Presser and Bar complete, Nos. 200096D, 200117F, 202557 to 202559, 233807, 235088, 237816 and two 200141F
202068	16778	Spool Holder Base
200575H	16778	" " " Screw
204296	16778	" " Wire
200079H	16778	" " " Hinge Screw
204297	16778	Spool Holder complete, Nos. 200079H, 202068 and 204296
239049	16755	Take-up Lever
202399	16755	" " Driving Stud with 202277
202277	16755	" " " " Oil Packing (wick)
202400	16755	Take-up Lever Hinge Stud with 202423
202423	16755	" " " " Oil Packing (wick)
200363C	16755	Take-up Lever Hinge Stud Set Screw
202401	16781	" " Oiling Felt
200132E	16781	" " " " Screw
244048	16757	Tension Disc (back)
239061	16757	" " (front)
210950	16757	" Release Driving Lever with 200394C and 202676
202676	16781	Tension Release Driving Lever Pin
239050	16757	" " " " " Slide Bar
239051	16757	Tension Release Driving Lever Pin Slide Bar 239050 with 200167E and 239055
202678	16757	Tension Release Driving Lever Pin Slide Bar Spring
200394C	16781	Tension Release Driving Lever Set Screw
239052	16757	Tension Release Washer
202407	16757	" Spring
263106	16757	" " Washer
200625F	16757	" Stud with 204925
200061C	16757	" " Set Screw
204925	16757	" " Washer
201572H	16757	" Thumb Nut
239053	16757	Tension complete, Nos. 200625F, 201572H, 202407, 239052, 239054, 239061, 244048 and 263106
239054	16757	Thread Controller Spring
239055	16757	" " " Stop
200167E	16757	" " " " Screw
210955	16757	" Guide (upper)
200582H	16757	" " Screw (2)
241755	16758	" Lubricator Oil Pad (felt)
237779	16758	" " " " Holder
240439	16758	" " " " Retainer
239071	16758	" " " Reservoir (left) Hand

No.	Plate	Name
241759	16758	Thread Lubricator Oil Wick
350432XC	16758	" " Screw
201650H	16758	" " " Nut
214838	16758	" " " Washer
239072	16758	Thread Lubricator (left hand) complete, Nos. 214838, 237779, 239071, 240439, 241755 and 241759
223710	16757	Thread Retainer Bracket with 200397H
200582H	16757	" " " Screw (2)
210960	16757	" " Disc
210961	16757	" " Plunger
210962	16757	" " " Spring
210993	16757	" " Sleeve
239056	16757	" " Socket
200397H	16757	" " " Set Screw
223844	16757	" " Spring
210957	16757	" " Stud
210958	16757	" " " Collar
200397H	16757	" " " Set Screw
223711	16757	Thread Retainer (lower) complete, Nos. 210957, 210958, 210993, 223710 and 223844
239057	16782	Throat Plate, 53 elongated needle hole, for needle sizes 14 and 15
200577AL	16782	Throat Plate Screw (2)
237744	16754	Vertical Shaft
237745	16754	" " Bevel Gear (lower)
205508	16754	" " " " " Position Pin
235857	16754	Vertical Shaft Bevel Gear (upper) with 200374C and 200396C
200396C	16754	Vertical Shaft Bevel Gear (upper) Position Screw
200374C	16754	Vertical Shaft Bevel Gear (upper) Set Screw
237734	16754	Vertical Shaft Bushing (lower)
200346C	16754	" " " " Set Screw
237746	16754	" " " (upper)
200362C	16754	" " " " Set Screw
237747	16778	" " Driving Gear with 200374C and 200396C
200396C	16778	Vertical Shaft Driving Gear Position Screw
200374C	16778	Vertical Shaft Driving Gear Set Screw
237754	16754	" " Oil Leader (lower) (brass)
237755	16754	" " " " (upper) (brass)

ACCESSORIES

No.	Plate	Name
203470	16780	Bobbin (2)
4822	17635	Roller Presser Hinge Screw Nut Wrench
228476	16783	Screw Driver (Bobbin Case)
16 x 4	-----	Needles, three each, sizes 12 and 14
227104	16762	Drip Pan (cast iron, square) with one wood screw 1-1/2 in., No. 14, R.H.B.
51078	16783	Machine Bolt (4)
6055	16783	" " Washer (4)
41401	16783	" Rest Pin (wood)
120342	16783	Oiler (copper plated) with 120343
120343	16783	" Spout, 3-1/2 in. long
225498	16783	Screw Driver (7-1/4 in. long)
225554	16783	Wrench (steel)

BOBBIN WINDER

(SWINGING AUTOMATIC, LEFT HAND)

227149	16761	Base
227209	16761	Frame with 200125F
227152	16761	" Hinge Pin
227153	16761	" Spring
200125F	16761	" Stop Screw
227154	16761	Pulley (large) with 200380C
200380C	16761	" Set Screw
227156	16761	Spindle
227157	16761	Stop Latch
227159	16761	" " Hinge Pin
227160	16761	" " Spring
227048	16761	Bobbin Winder complete (large pulley) Nos. 227149, 227152 to 227154 227156, 227157, 227159, 227160, 227209 and two round head wood screws 3/4 in., No. 12,
202480	16761	Spool Holder Base with 200355H and 202484
202481	16761	Spool Holder Base Spool Pin
202482	16761	" " Tension Disc (lower or upper)
200011D	16761	Spool Holder Tension Disc Screw
200355H	16761	" " " " " Set Screw

No.	Plate	Name
202483	16761	Spool Holder Tension Disc Spring (brass)
202484	16761	Spool Holder Tension Disc Thread Guide
202485	16761	Bobbin Winder Spool Holder complete, Nos. 200011D, 202480, 202481, 202483, two 202482 and one wood screw 1 in., No. 12
227514	16761	Bobbin Winder and Spool Holder complete, Nos. 202485 and 227048

FOOT LIFTER

227952	16762	Foot Lifter Lever with 227954
227678	16762	" " " Chain, 48 in. long, with 202784
227954	16762	Foot Lifter Lever Chain Hook (lower)
202784	16762	" " " " " (upper)
225016	16762	" " " Hinge Pin
227939	16762	" " " Stand with two wood screws 1 in., No. 12
227955	16762	Foot Lifter Lever complete, Nos. 225016, 227678, 227939 and 227952

(Other Foot Lifter parts are listed with parts of Machine Head)

FEED REGULATING GEARS

239018	16779	Feed Regulating Gear, 23 teeth, with 200382C and 201220C
239019	16779	Feed Regulating Gear, 24 teeth, with 200382C and 201220C
239020	16779	Feed Regulating Gear, 25 teeth, with 200382C and 201220C
239021	16779	Feed Regulating Gear, 26 teeth, with 200382C and 201220C
239022	16779	Feed Regulating Gear, 27 teeth, with 200382C and 201220C
239023	16779	Feed Regulating Gear, 28 teeth, with 200382C and 201220C
239024	16779	Feed Regulating Gear, 29 teeth, with 200382C and 201220C
239025	16779	Feed Regulating Gear, 30 teeth, with 200382C and 201220C
239026	16779	Feed Regulating Gear, 31 teeth, with 200382C and 201220C

ROLLER PRESSERS

No.	Plate	Name
201926	17635	Roller Presser, 13/16 in. diam., 5/32 in. face (fine) with 1528J, 201699C, 350104C and twenty-eight 206417
201928	17688	Roller Presser, 1-1/4 in. diam., 3/16 in. face (fine) with 1528J, 1766C, 50553C and twenty-four 16232
201931	17688	Roller Presser, 1-1/4 in. diam., 1/8 in. face (fine) with 1528J, 1766C, 50553C and twenty-four 16232
201933	17688	Roller Presser, 1-1/4 in. diam., 1/16 in. face (fine) with 1528J, 1766C, 50553C and twenty-four 16232
201951	17635	Roller Presser, 13/16 in. diam., 3/16 in. face (fine) with 1528J, 201699C, 350104C and twenty-eight 206417
201954	17635	Roller Presser, 13/16 in. diam., 1/8 in. face, with 1528J, 201699C, 350104C and twenty-eight 206417
201971	17688	Roller Presser, 1-1/4 in. diam., 3/32 in. face (fine) with 1528J, 1766C, 50553C and twenty-four 16232
201963	17688	Roller Presser, 1-1/4 in. diam., 5/32 in. in. face, with 1528J, 1766C, 50553C and twenty-four 16232
203422	17635	Roller Presser Arm
203426	17688	" " Arm
203423	17635	" " " 203422 with 201926
203427	17688	" " " 203426 with 201928
203430	17688	" " " 203426 with 201931
203431	17688	" " " 203426 with 201933
203432	17635	" " " 203422 with 201951
203434	17688	" " " 203426 with 201963
237816	17635	" " " 203422 with 201954
238527	17688	" " " 203426 with 201971
233807	17681	" " " Bracket
235088	17681	" " " " Position Collar with 200362C
200117F	16781	Roller Presser Arm Bracket Position Collar Position Screw
200362C	16781	Roller Presser Arm Bracket Position Collar Set Screw
202558	16781	Roller Presser Arm Bracket Spring
202559	16781	" " " " " Stop
200141F	16781	Roller Presser Arm Bracket Spring Stop Screw
200096D	16781	Roller Presser Arm Screw

No.	Plate	Name
16232	17688	Roller Presser Ball, 3/32 in. diameter
206417	17635	" " " 1/16 in. diameter
1766C	17688	" " " Cone
201699C	17635	" " " Cone
202557	16781	" " Bar
50553C	17688	" " Hinge Screw
350104C	17635	" " " Screw
1528J	17635	" " " " Nut
233808	16781	Roller Presser and Bar complete, Nos. 200096D, 200117F, 202557 to 202559, 203427, 233807, 235088 and two 200141F
233843	16781	Roller Presser and Bar complete, Nos. 200096D, 200117F, 202557 to 202559, 203432, 233807, 235088 and two 200141F
237847	16781	Roller Presser and Bar complete, Nos. 200096D, 200117F, 202557 to 202559, 233807, 235088, 237816 and two 200141F

WORK PLATE PLATFORM

214013	17028	Work Plate
200990C	17028	" " Screw
201518E	17028	" " " Nut
239067	17028	" " Slide (back)
239066	17028	" " " (front)
239064	17028	" " Yoke with 200729A
200729A	17028	" " " Screw
239065	17028	Work Plate complete, Nos. 214013, 239064, 239066, 239067, four 200990C and eight 201518E

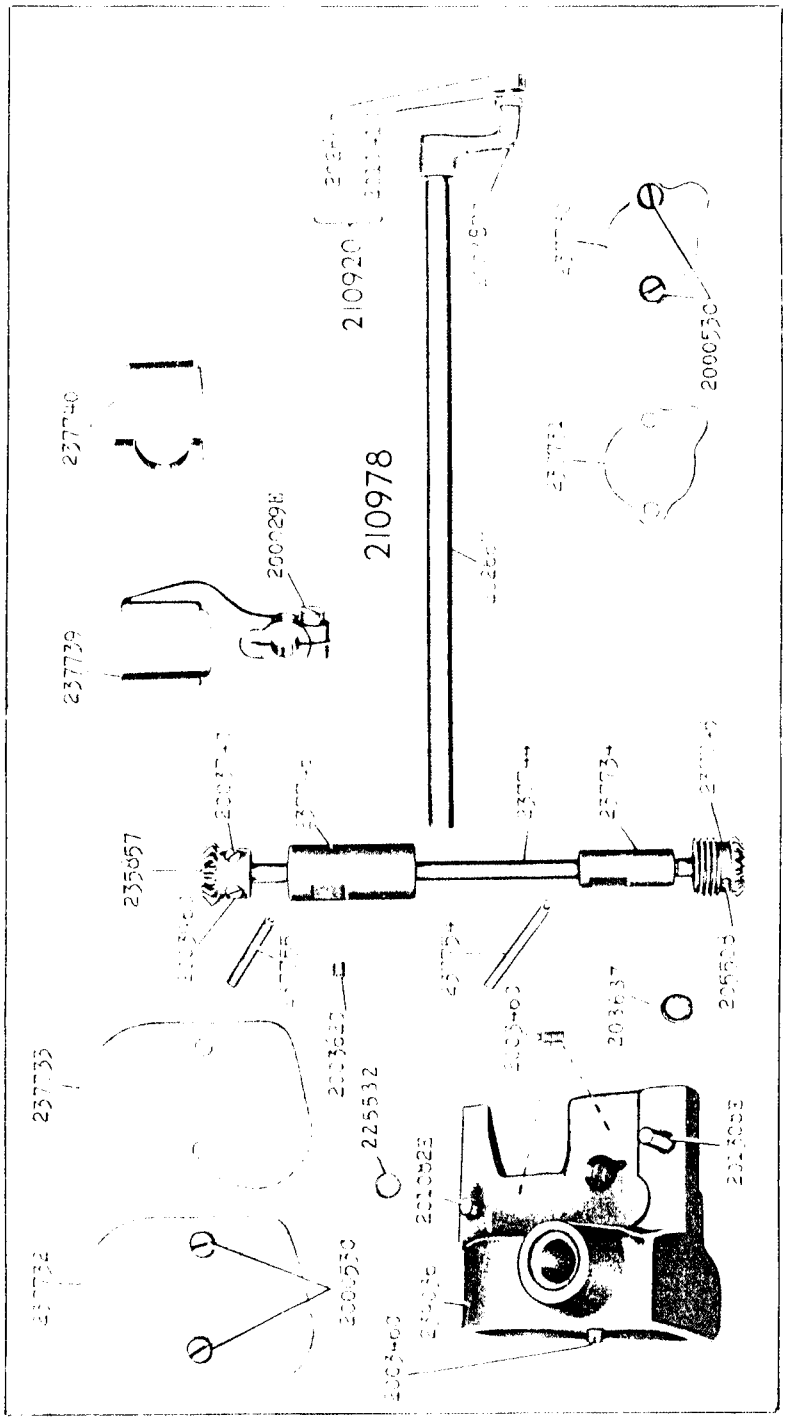

SINGER Needles should be used
in **SINGER** Machines
These Needles and their Containers
are marked with the
Company's Trade Mark "SIMANCO."** 1

Needles in Containers marked
"FOR SINGER MACHINES"
are NOT **SINGER** made needles. 2

16755 - 1/2

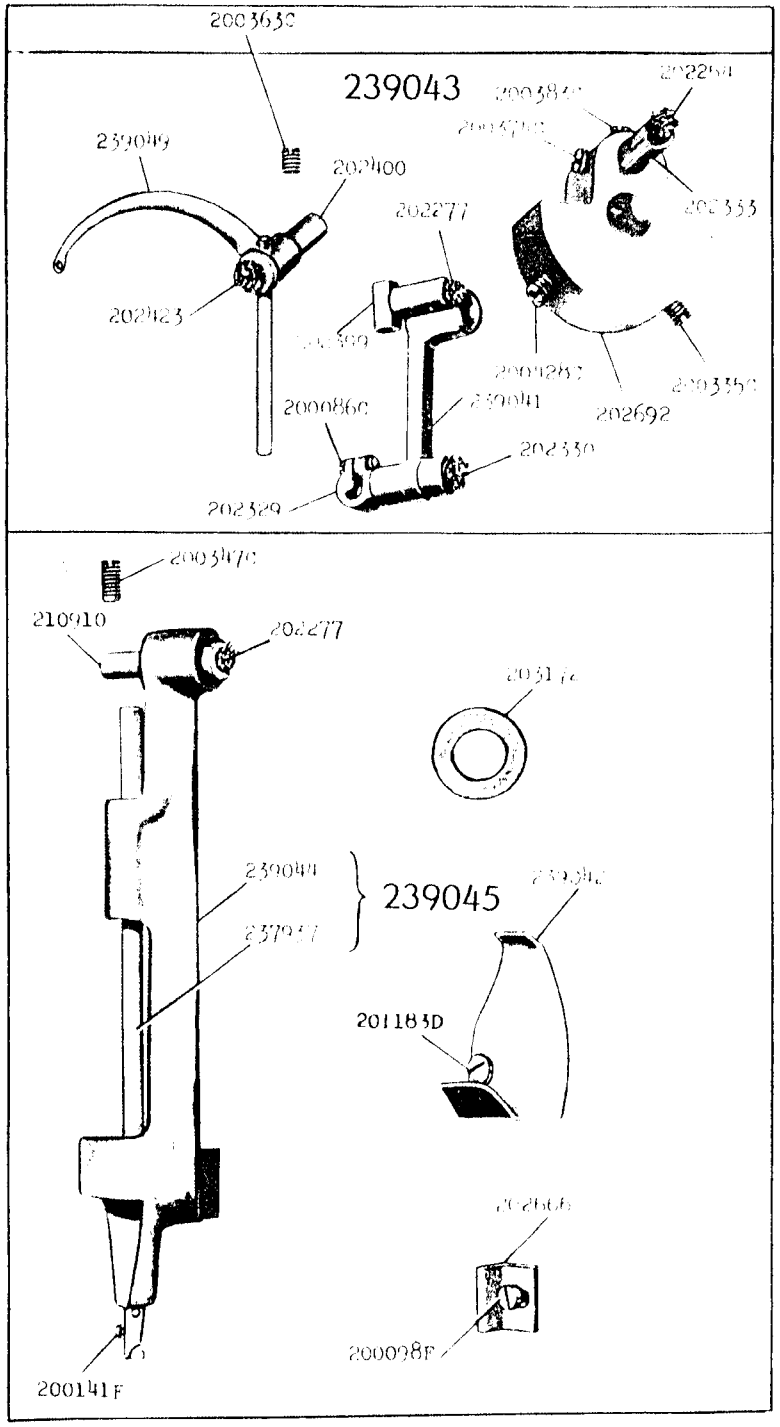

16757 - 2/3

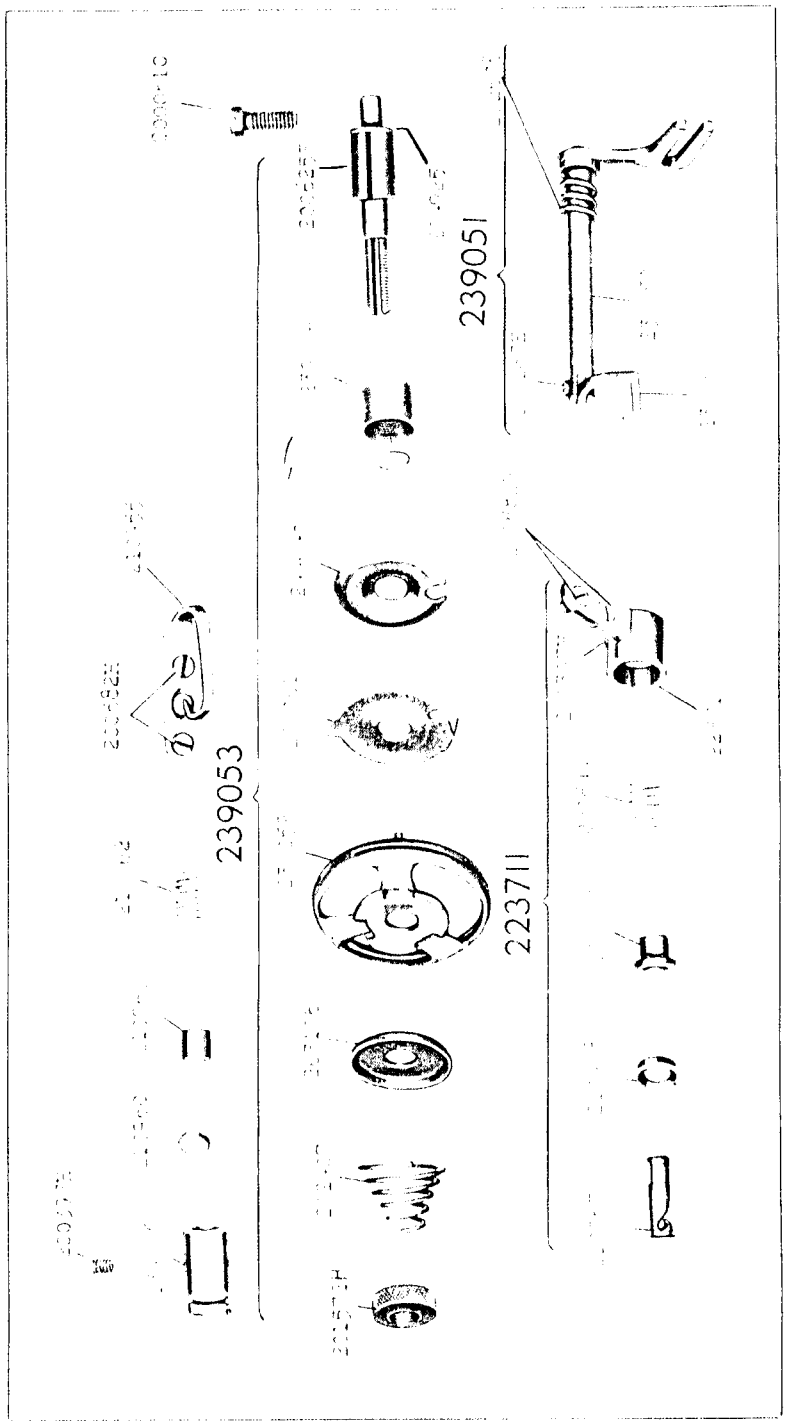

16758 - 3/8

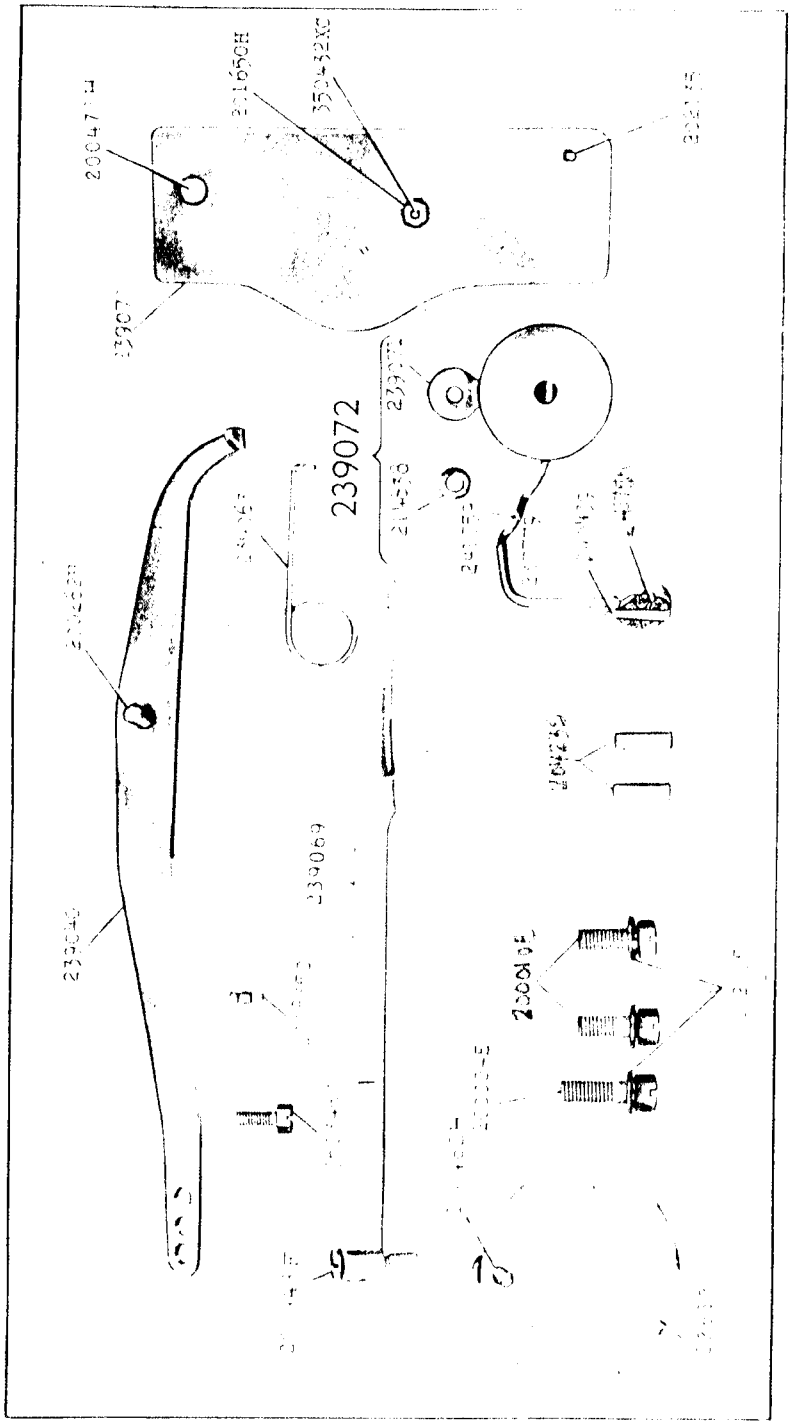

16761 - 2/3

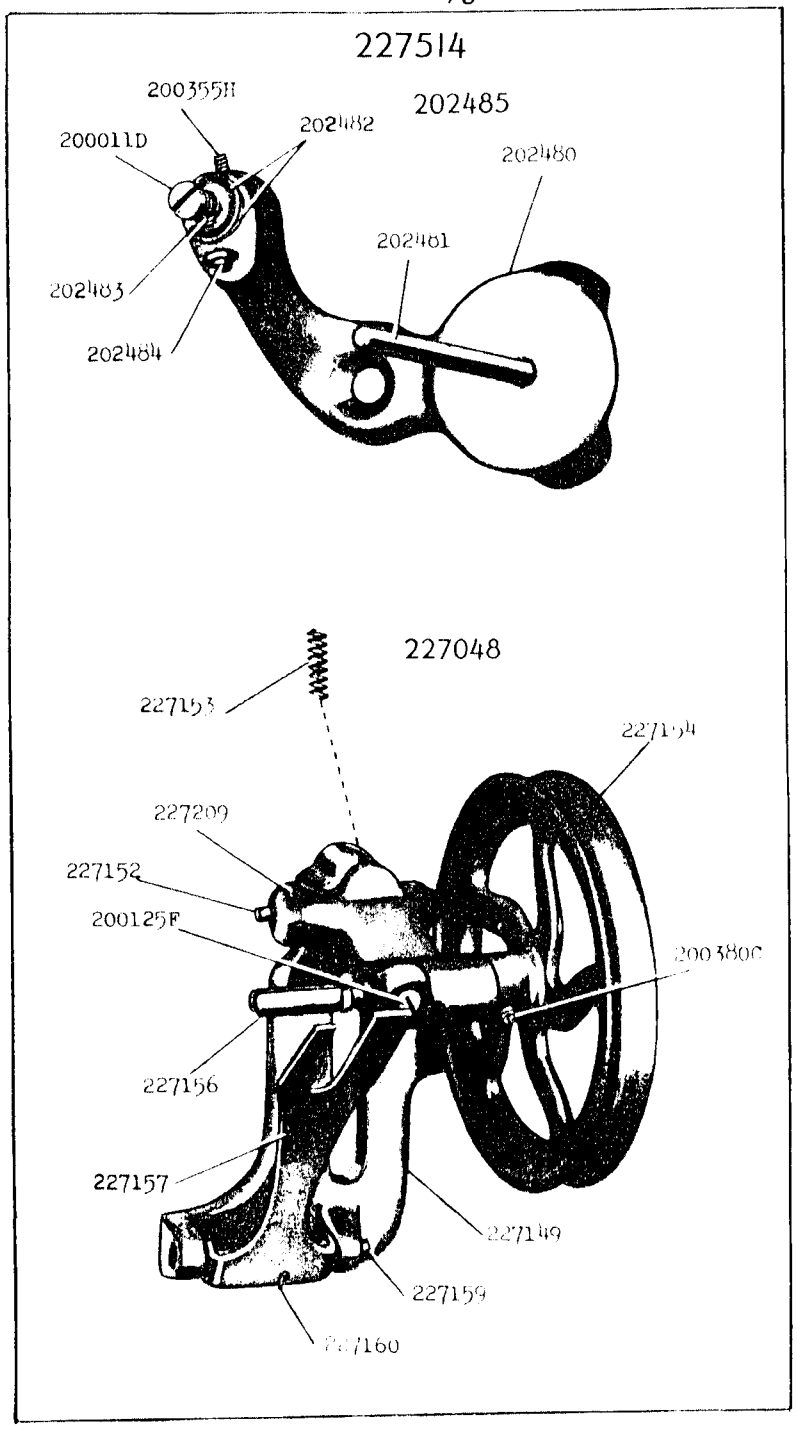

16762 - 3/8

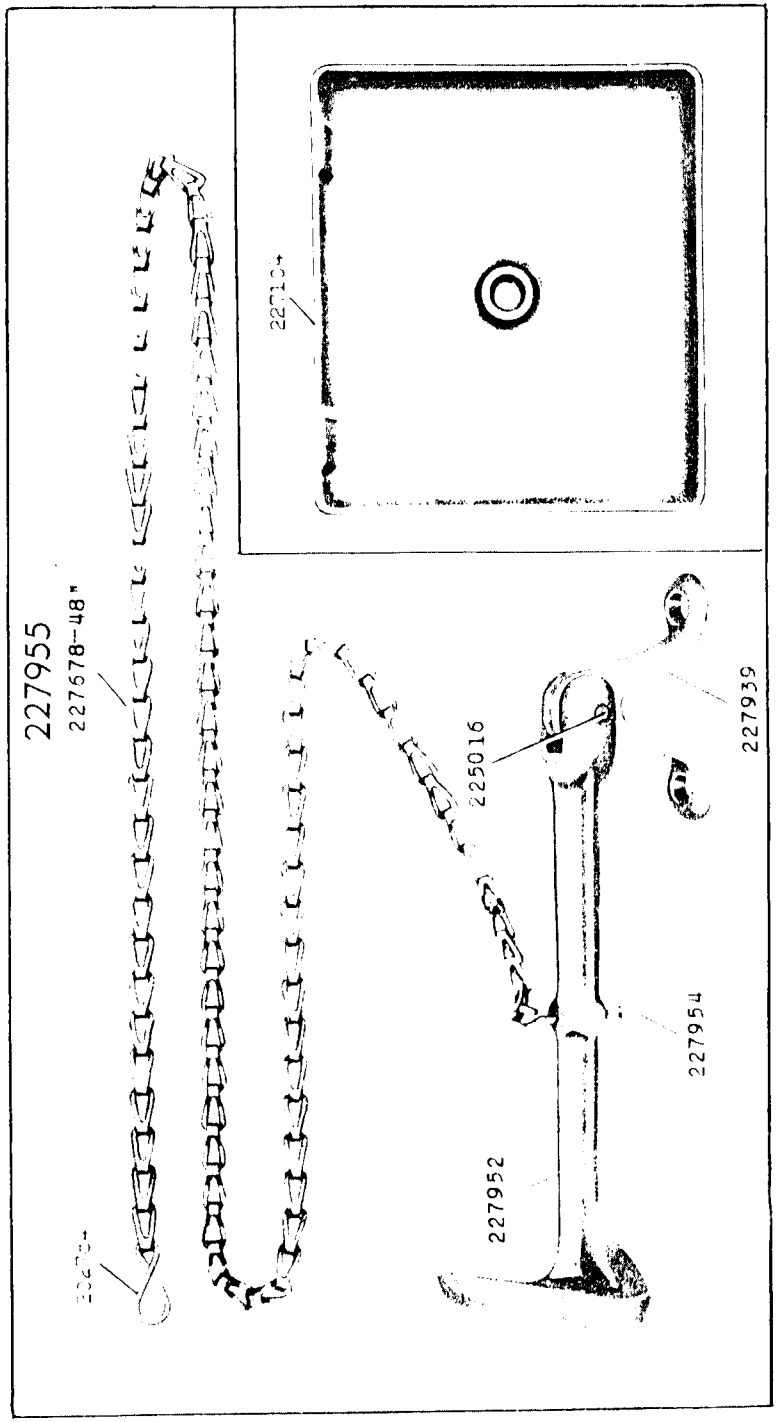

16778 - 3/8

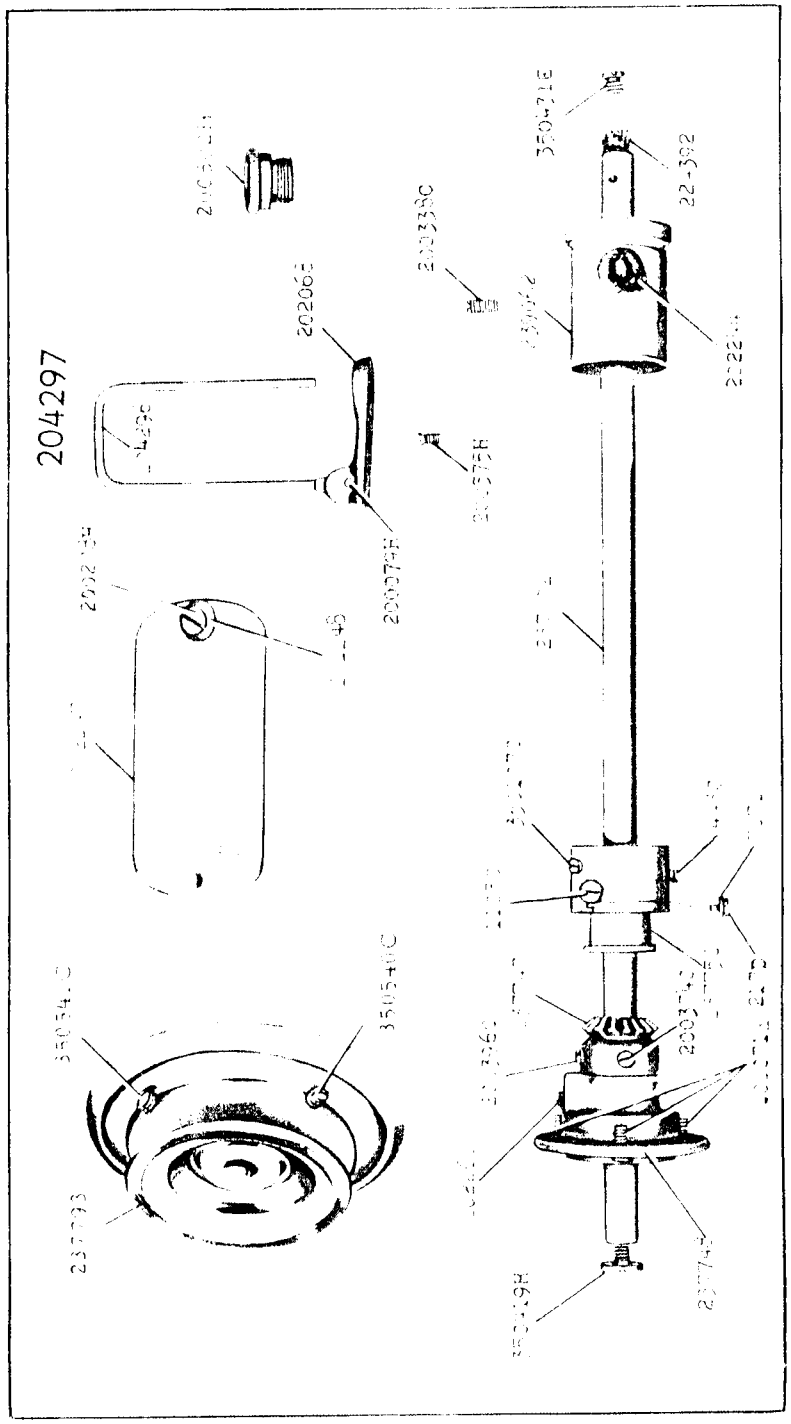

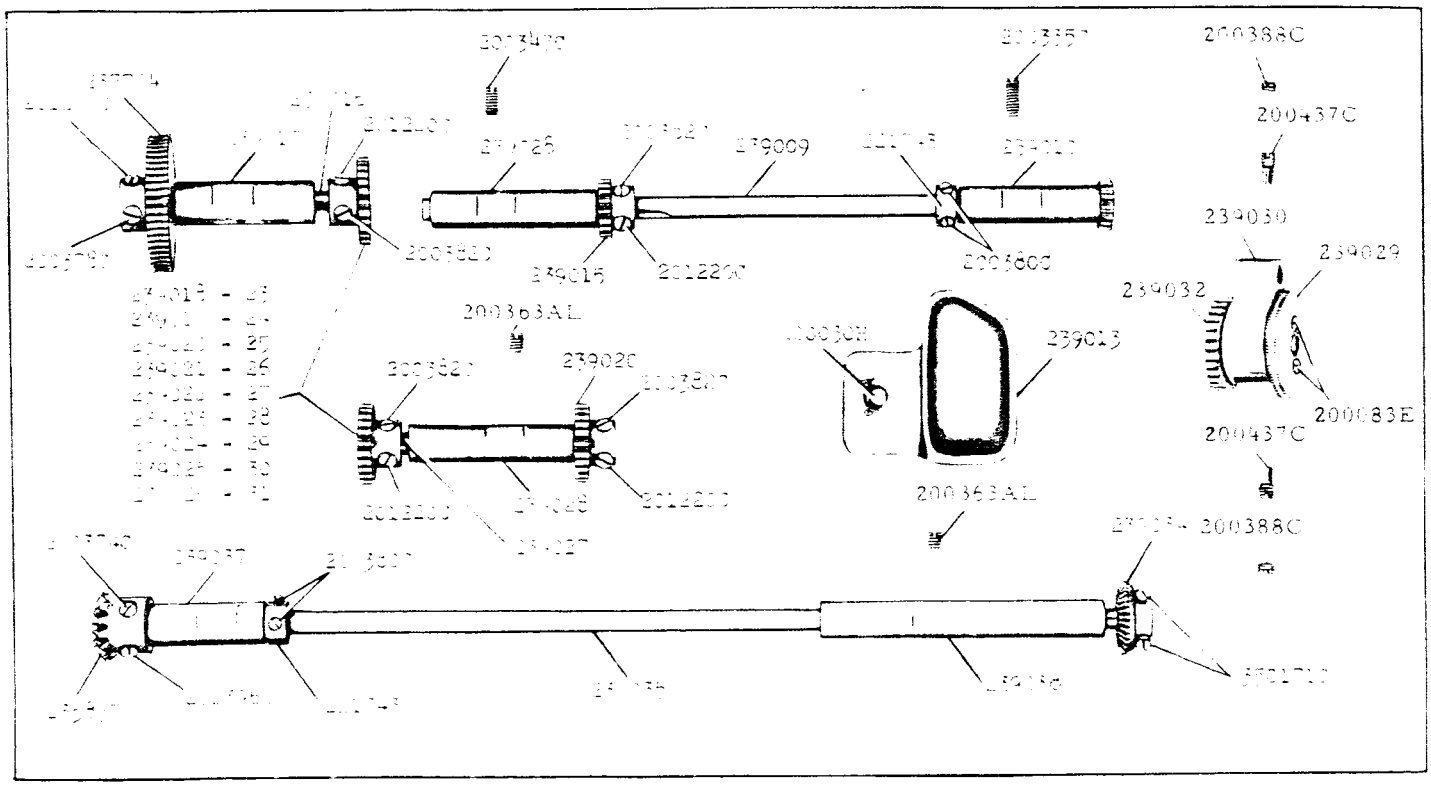

16779 - 3/8

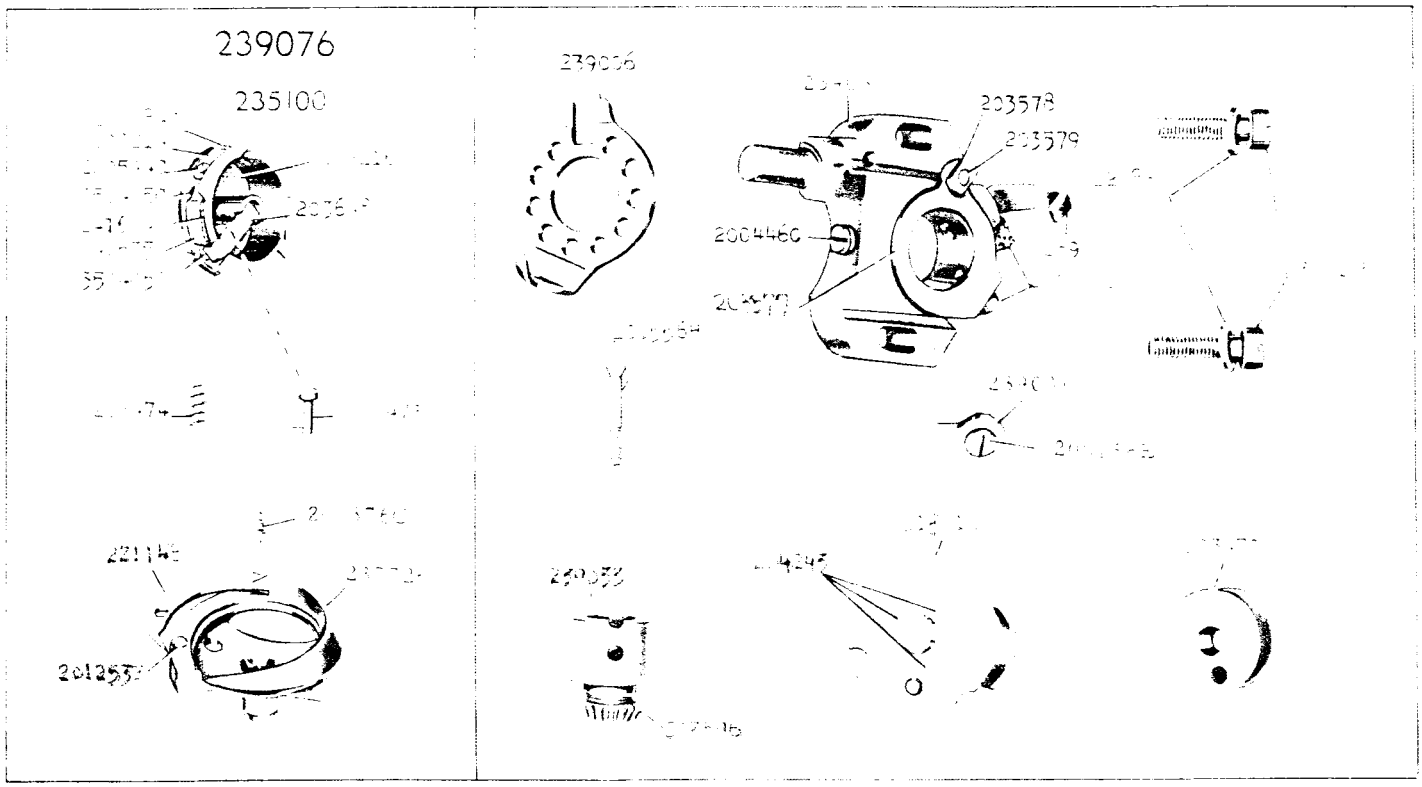

16780 - 5/8

16781 - 1/2

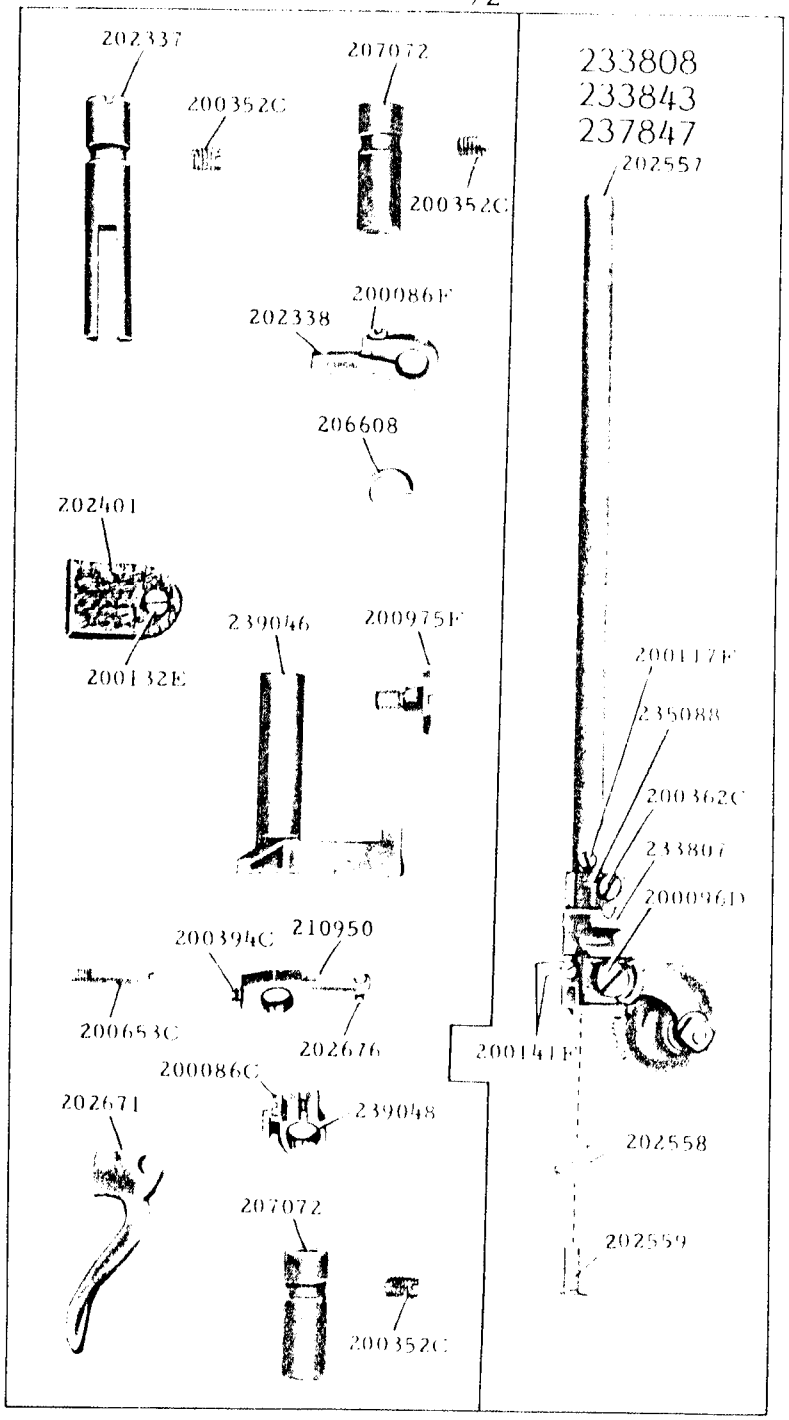

16782 - 1/3

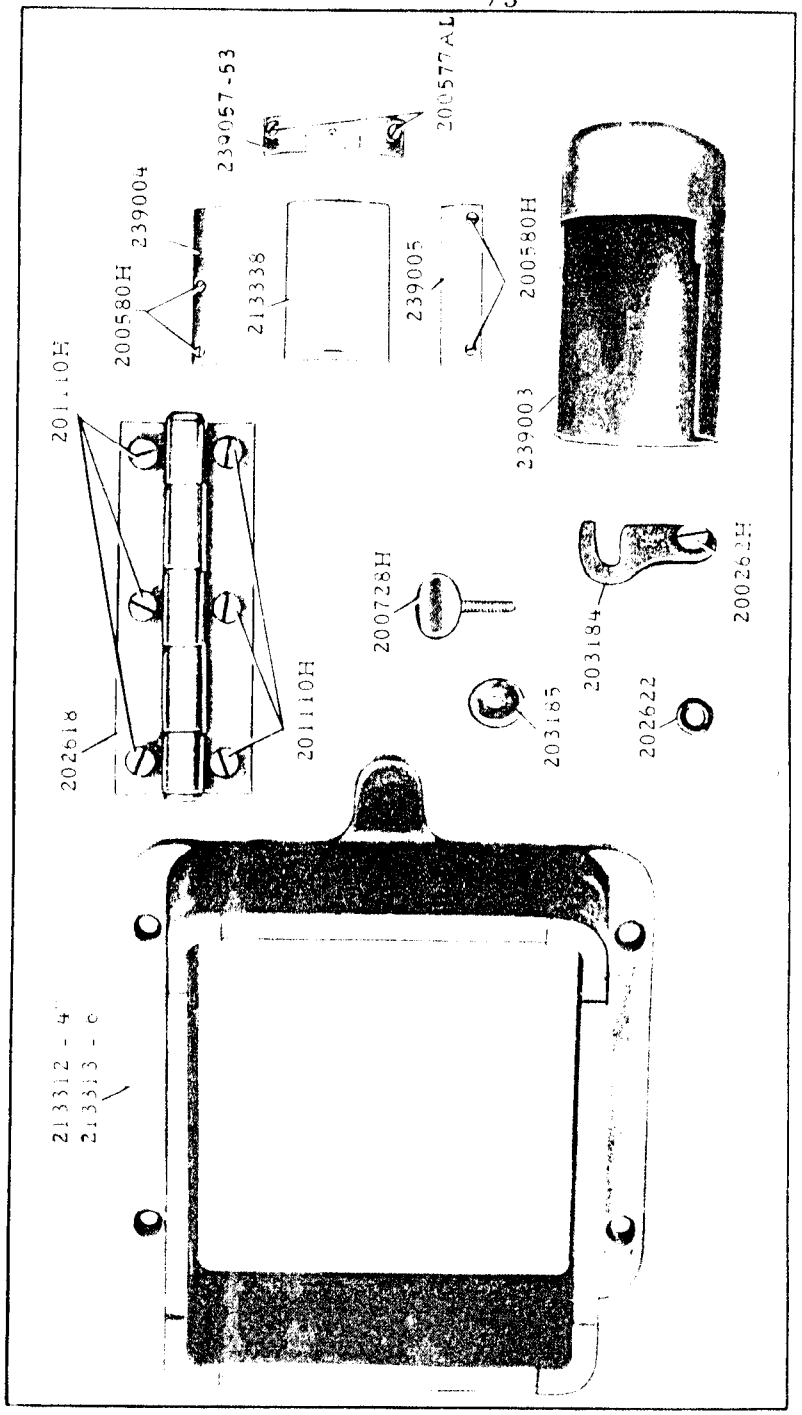

16783 - 1/2

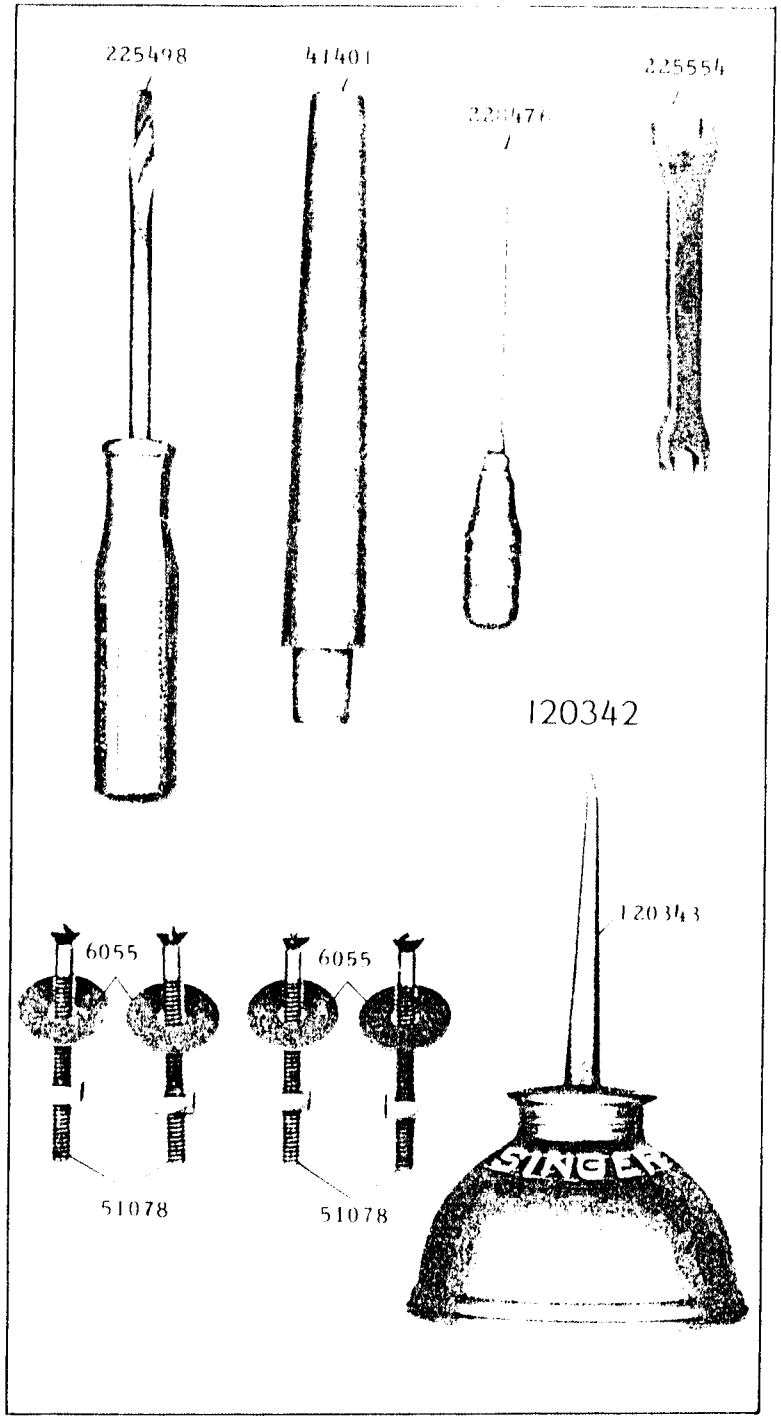

17028 - 3/8

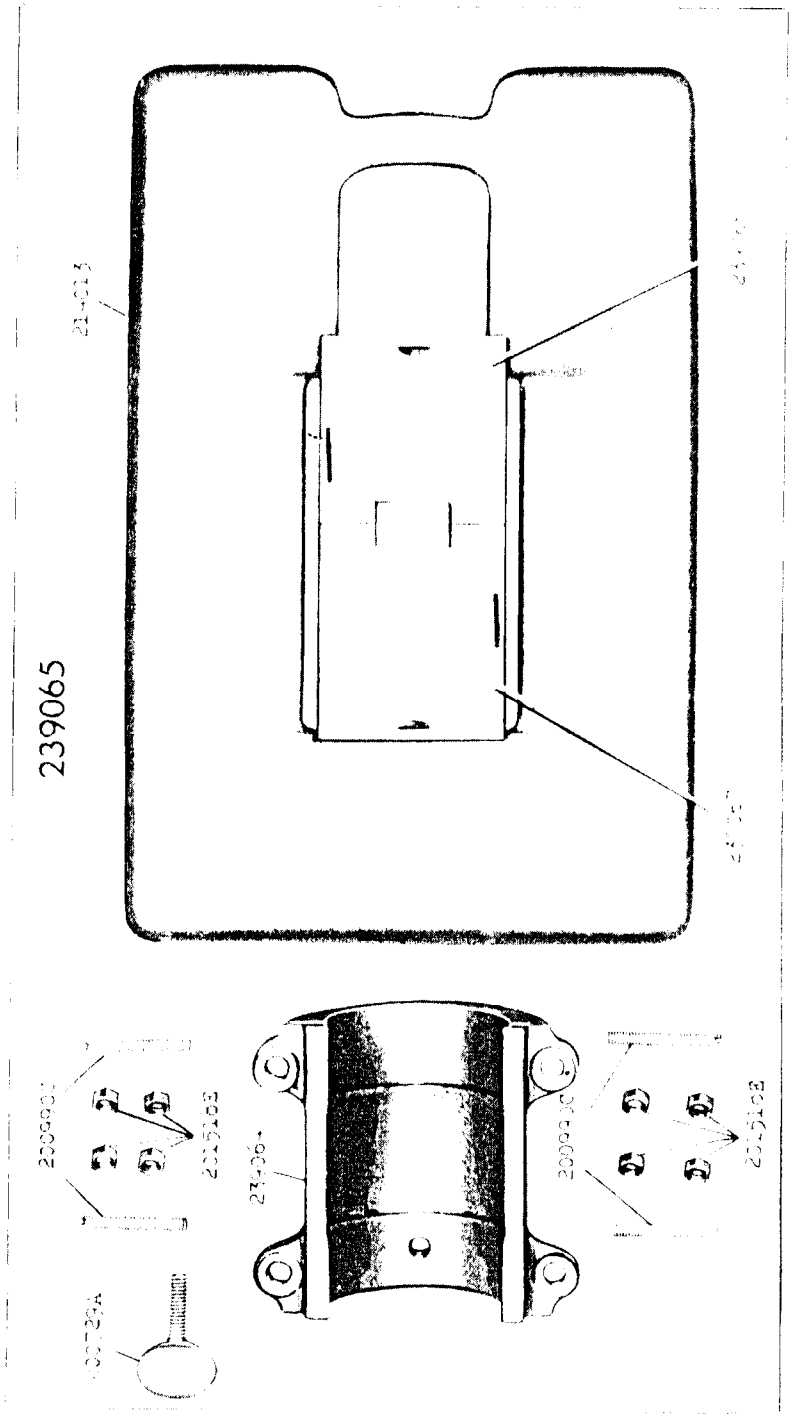

17635

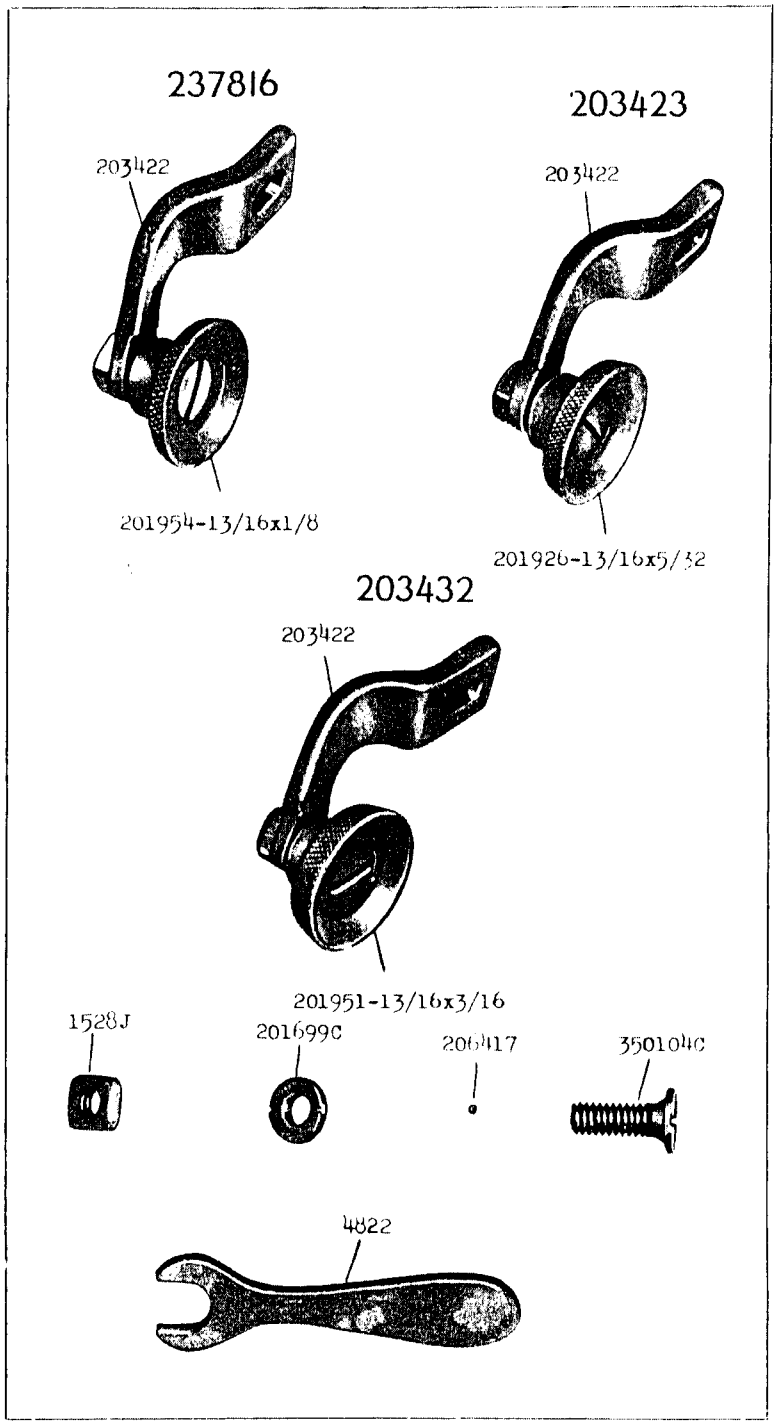
237816
203422
201954-13/16x1/8
203423
203422
201926-13/16x5/32
203432
203422
201951-13/16x3/16
1528J
201699C
206417
350104C
4822

17688

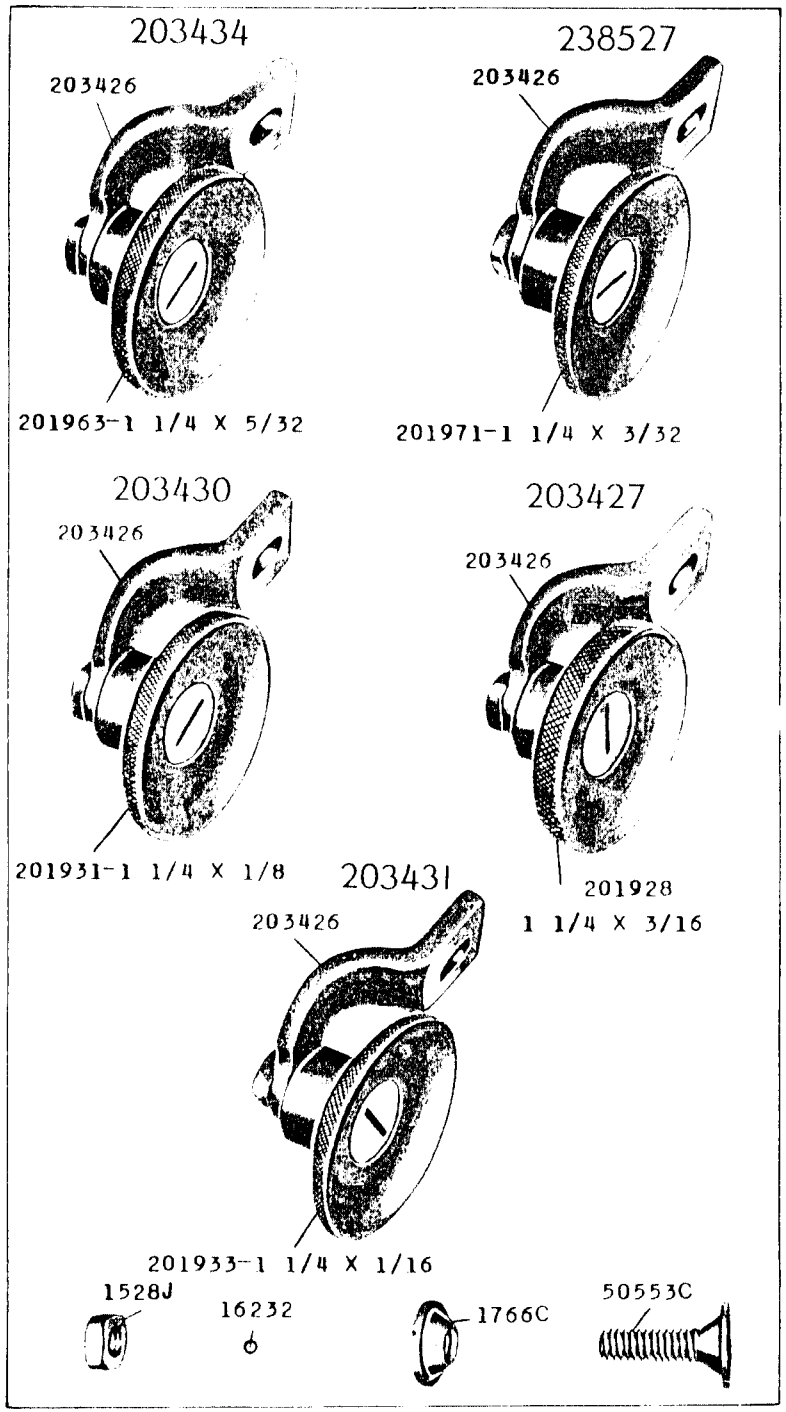
203434
203426
201963-1 1/4 X 5/32
238527
203426
201971-1 1/4 X 3/32
203430
203426
201931-1 1/4 X 1/8
203427
203426
201928
1 1/4 X 3/16
203431
203426
201933-1 1/4 X 1/16
1528J
16232
1766C
50553C